This is a reproduction of a library book that was digitized by Google as part of an ongoing effort to preserve the information in books and make it universally accessible.

Google™ books

https://books.google.com

BIBLIOTHEK
DER
NATURFORSCHENDEN
GESELLSCHAFT
IN
ZURICH.

Digitized by Google

Digitized by Google

1 W E

Digitized by Google

Digitized by Google

N 329

ANNALS

OF THE

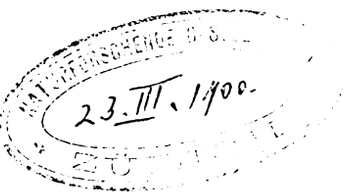

CAPE OBSERVATORY.

VOLUME VII.

Published by order of the Lords Commissioners of the Admiralty in obedience to Her Majesty's command.

LONDON:
PRINTED FOR HER MAJESTY'S STATIONERY OFFICE,
BY DARLING & SON, LTD., 1, 2, 3, & 5, GREAT ST. THOMAS APOSTLE, E.C.

1896.

Digitized by Google

Digitized by Google

A

DETERMINATION OF THE SOLAR PARALLAX

AND

MASS OF THE MOON,

FROM

HELIOMETER OBSERVATIONS

OF THE MINOR PLANETS

IRIS, VICTORIA AND SAPPHO

MADE IN THE YEARS

1888 and 1889

AT THE

ROYAL OBSERVATORY, CAPE OF GOOD HOPE,

IN CO-OPERATION WITH THE OBSERVATORIES OF

YALE COLLEGE (Newhaven), LEIPZIG, GÖTTINGEN, BAMBERG AND OXFORD (Radcliffe),

AND FROM

MERIDIAN OBSERVATIONS MADE AT ALL THE PRINCIPAL OBSERVATORIES,

PLANNED AND DISCUSSED BY

DAVID GILL, LL.D. F.R.S.,
HER MAJESTY'S ASTRONOMER AT THE CAPE,

WITH THE CO-OPERATION OF

ARTHUR AUWERS, PH.D., BERLIN, AND W. L. ELKIN, PH.D., YALE UNIVERSITY OBSERVATORY.

VOLUME II.

Digitized by Google

NATURFORSCHENDE
GESELLSCHAFT
IN
ZURICH.

Digitized by Google

DETERMINATION OF THE SOLAR PARALLAX, &c.

CONTENTS OF VOLUME II.

Vol. II., Part 1:—

	PAGE
Description of Instruments, prepared and edited by David Gill	1–71
and	
Details of Observations, „ „ „	1–404

Vol. II., Part 2:—

Discussion of the places of the Comparison Stars from the meridian observations, by Arthur Auwers	405–718

Vol. II., Part 3:—

On the construction of Tables for the correction of Heliometer measures for refraction, by Harold Jacoby	719–739

Digitized by Google

Digitized by Google

DETERMINATION OF THE SOLAR PARALLAX, &c.

VOL. II., PART 1.

DESCRIPTION OF THE HELIOMETERS

AND DETAILS OF THE

HELIOMETER OBSERVATIONS,

PREPARED AND EDITED BY

DAVID GILL.

Digitized by Google

Digitized by Google

OBSERVATIONS OF VICTORIA AND SAPPHO.

Description of Instruments.

The Heliometers employed for the Observations of Victoria and Sappho are so similar in design that an account of the Cape Instrument will nearly suffice for all of them.

Experience with the Dun Echt Heliometer (Dun Echt Publications, Vol. II.) showed its chief defects to be—

1st. The quick motion in Position Angle was not sufficiently delicate, nor readings by a vernier sufficiently precise, for measurement of Position Angles, except for comparatively small distances; and the slow motion was not sufficiently responsive to the observer's hand (*see* Mem. R.A.S., Vol. XLVIII., page 2).

2nd. The method of illuminating the scales by a lamp, held in the hand or placed on a stand, the position of which, on account of the diurnal motion, had to be frequently changed, was not only inconvenient but was detrimental to the accuracy of the observations, both as a source of irregular heating and as disturbing, by its glare, the condition of the observer's eye.

These inconveniences were remedied by Messrs. Repsold in the Heliometer constructed by them for the Observatory of Yale University, of which a brief account is given by Dr. Elkin in "Transactions of the Astronomical Observatory of Yale University," Vol. I., part 1. Dr. Elkin subsequently added an additional handle for slow motion in Position Angle intermediate in speed between those of the two slow motions provided by Messrs. Repsold.

In arranging with Messrs. Repsold the details of the Cape Heliometer I was anxious so to contrive matters that an observer would never require to employ a lamp or have to write down anything during the progress of an observation; thus not only would much precious time be saved, but also the observer's eyes would never have to

Digitized by Google

be exposed to any light other than that of the carefully regulated illumination of the field. For this purpose I hoped that photography might have been available. Experiments were kindly tried, with this end in view, by Professor H. C. Vogel, of Potsdam, with experimental apparatus made by Messrs. Repsold, but satisfactory results could not be obtained. Meanwhile, Dr. Elkin had procured from Messrs. Repsold a printing micrometer, by which, as subsequently described, the successive readings of the micrometer head are embossed on a ribbon of paper. As this apparatus worked admirably I adopted it, providing, however, for the registration not only of the sub-divisions of the micrometer head, but of the number of revolutions also. In researches on stellar parallax, where the same scale-divisions are used throughout for the same star, automatic registration of the scale-divisions (which can only be accomplished by photography) is a matter of little consequence ; whilst in other researches, where the observer has to shift frequently from one object to another, it is necessary for the quickest working to have an assistant to read out the settings, and to record the scale-divisions as called out by the observer. The printing micrometer, therefore, fulfilled all the requirements of the case. It seemed further desirable to provide for far greater precision in the determination of the errors of scale division, and for a greater perfection of illumination and precision of pointing on the scale divisions. The scales were accordingly made of iridio-platinum—an alloy similar to that employed for the Metric Standards of the International Bureau of Weights and Measures—and on this hard and durable material the divisions were drawn with a fine diamond cutter. The objective of the micrometer-microscope is placed much nearer to the Scales than to the webs, so that the image of the Scale formed in the plane of the webs is magnified in the proportion of 4 to 1. To have carried this magnification farther by the objective, would have the effect of making the images of the divisions too wide in proportion to the diameter of the spider webs—a condition unfavourable to exact measurement. In the Yale Heliometer, as in the Dun Echt instrument, the magnification of the Scales was obtained solely through the eye-piece, the object-glass being mid-way between the Scale and the plane of the webs. This gave a much larger range of the micrometer field at the sacrifice of magnifying power, but it permitted the division errors of the Scales to be determined without auxiliary apparatus. In the Cape Heliometer special apparatus was provided for the investigation of the errors of the Scale divisions, as subsequently described.

The following description of the Cape Heliometer is based on drawings made by Messrs. Repsold at the request of the Editor of "Engineering," and I am indebted to the kindness of the Editor and Proprietors for electrotypes from the admirable wood-cuts which illustrate the account of the instrument given in that Journal, 1890, January 3 and 10.

Digitized by Google

The Cape Heliometer.

Fig. 1 gives a general view of the instrument ; Figs. 2 and 3 show the central part of the telescope tube and its attachments to the declination axis ; Figs. 4 and 5 show the details of the object-glass mounting ; and Fig. 6 is a perspective view of the eye-end of the telescope. As regards the general design of the equatorial mounting, the pattern used by Messrs. Repsold for their smaller refractors was adopted. The supporting column (see Fig. 1) is made in two parts, and is bolted to a cast-iron tripod beneath the floor line, two feet of this tripod resting on ball-and-socket joints on cast-iron plates, while the third foot rests on a plane plate, and is provided with an adjusting screw by which the fine adjustment of the inclination of the polar axis can be effected.

To the flange on the top of the column is bolted a cast-iron head of the form shown. This head can be rotated in a horizontal plane to give adjustments in azimuth, these adjustments being effected by a tangent screw provided for the purpose. The two side ribs of the head (those running north and south) carry the bearings for a pair of trunnions which project from the sleeve or cast-iron casing, 1, which incloses the polar axis. On the trunnions just mentioned the polar axis can be canted through an angle of 60°, thus affording a range of adjustment for latitude from 0° to ± 60°. An arc fixed on the casing of the polar axis and concentric with the trunnions, passes through slots on the side of the head, and is clipped there by two screws. This arrangement serves for the coarse adjustment of the position of the polar axis ; the fine adjustment is made by means of the screw on one of the feet of the tripod as already mentioned.

On the upper end of the polar axis sleeve 1, is mounted the driving circle 3, this being geared into by the worm 4, which is driven by the clock. The bearings for the driving worm are carried by the arc which we have mentioned as being fixed to the polar axis sleeve, so that the worm always remains in gear whatever the position of the polar axis may be. As will be seen from Fig. 1, also, the connections between the worm and clock are such that they are not interfered with by adjustments of the angle of the polar axis. The driving circle 3 is free on the polar axis sleeve, but its boss is encircled by a clamp 5 having an arm, the outer end of which (the upper end in Fig. 1, the lower end in Fig. 2) is connected to the sleeve of the declination axis by a screw 7 (Fig. 2), which enables a slow motion to be given in right ascension. When the clamp 5 is tightened the polar axis, of course, moves with the driving circle ; while, when it is loose, the clock drives the circle alone.

Digitized by Google

At the lower end of the polar axis is mounted the hour circle 9, the graduations of which are read by two microscopes 8. A handwheel 10, carrying a pinion which gears into a wheel fixed on the polar axis, affords the means of roughly setting the instrument in right ascension. A prolongation of the polar axis at the lower end carries the counterweight 11, the object of which is to make the centre of gravity of the instrument coincide with the axis of the trunnions on which the polar axis sleeve is mounted. The pressure of the polar axis on its bearings is relieved by friction wheels, a pair of these wheels acting at right angles to the axis close to the upper bearing, while another friction wheel acting on a collar near the lower end takes the longitudinal thrust. The load on the upper friction wheels is adjusted by levers and the balance weight 12.

The declination axis sleeve 6 carries the two bearings for this axis, the main bearing being placed as close to the telescope tube as possible. Adjoining this bearing is the declination circle 13, which is protected by a dust guard, and behind this is the clamp 14, the arm of which (see Figs. 2 and 3) is connected to the central part of the telescope tube by the screw 15, which affords the slow motion in declination. This screw and also the screw 7 already referred to as giving the slow motion in right ascension, act directly in both directions without the use of any counter-spring. The nuts of the screws 7 and 15 are coupled to their respective clamp arms by double links, and they are split and provided with tightening screws which are adjusted until the screws work easily through the links without shake. The ends of the screws which are connected to the declination sleeve and the central part of the telescope tube respectively, are made spherical, each of these ball ends being gripped by two jaws.

The two slow-motion screws 7 and 15, as well as the corresponding clamping screws, are operated from the eye-end of the telescope by four rods, as shown in Figs. 1 and 3. Of these that marked 18 acts directly on the declination clamp, while 19 operates the declination slow-motion screw through bevel gear. The two other rods 20 and 21 deal with the right ascension clamp and slow motion. As will be seen from Figs. 1 and 3, they give motion, the one directly and the other through the intervention of a pair of wheels, to two concentric shafts, one solid and the other tubular, which pass through the arm of the declination clamp in a radial direction, and carry at their inner ends the bevel pinions 22 and 23. These pinions respectively engage with the gear rings 24 and 25 (Fig. 3), which encircle the declination sleeve and revolve on it. Each of these rings has a second set of teeth on its reverse side, one ring driving by means of these teeth the pinion 26, which through a jointed rod (see Fig. 2) operates the right ascension clamp, while the other gears with the bevel pinion 27, the axis of which operates by another pair of bevel wheels the screw 7 giving a slow motion in right ascension.

Digitized by Google

The declination sleeve carries at the end farthest from the telescope the balance weight 17, which is made flat so as to clear the column when the polar axis is set at a low elevation. This balance weight is so proportioned as to make the centre of gravity of the moving parts coincide with the centre line of the polar axis.

The telescope tube instead of being fixed to the declination axis as it would be in an ordinary equatoreal, rests in a cradle or short tube 16, which is bolted to the flange at the end of the declination axis, as shown in Fig. 3. As the telescope tube has an axial rotation in this cradle it was necessary to place within the telescope tube the tube 29 of the reading microscope for observing the divisions of the object-glass slides, the rod 30 for operating these slides, and two other rods 31 and 32, of which we shall have to speak presently. Of course those various parts within the tube have to be kept clear of the cones of rays proceeding from the two segments of the object-glass.

We have spoken of the rotation of the telescope as an "axial" rotation, and we must now qualify this description. As the objects to be observed by the instrument are at practically an infinite distance, there is no necessity that the axis of rotation should coincide with the axis of the telescope tube, and for convenience in keeping the internal connections just mentioned out of the way of the rays of light, an eccentric arrangement has been adopted. Thus, referring to Fig. 3, it will be seen that the tube of the telescope consists of three parts, which, for convenience of description, we will name the eye-piece tube, the central tube, and object-glass tube respectively. The central tube, marked 33 in Fig 3, fits the cradle 16, and has at its object-glass end a broad external flange which bears against three friction wheels 35 carried by a flange on the cradle 16. With the telescope in its usual observing position, these wheels take the longitudinal thrust due to the weight of the telescope, tending to make it slide through the cradle. At its other end the central tube has an internal flange, which just touches the flange at the upper end of the eye-piece tube 34.

Referring now to Fig. 2, it will be seen that the eye-piece tube 34 is placed eccentrically with regard to the central tube 33, and this enables the microscope tube 29, and the rods 30, 31, and 32, which are inside the central tube, to be passed through the internal flange at the lower end of that tube, and thus to become external to the eye-piece tube 34. The central portion of the telescope tube can thus be of smaller diameter than would have been possible had a concentric arrangement of all parts been adopted. The eye-piece tube 34 is a drawn wrought-iron tube of only sufficient diameter to receive the converging rays proceeding from the two halves of the object-glass. The reading microscope 29, and the rods 30, 31, and 32, which we have mentioned as passing through the end flange of the eye-piece tube, of course revolve with that tube, and are suitably supported at the eye-end as shown in Figs. 1 and 6.

Digitized by Google

Besides these details which revolve with the telescope, there are, however, other parts which must not so revolve, but which have also to be available at the eye-end of the instrument. To carry these parts the eye-piece tube proper is surrounded by an outer shell tube 36 (Fig. 3), made of sheet steel and fixed to the sleeve 16, in which the telescope rotates. At the eye-end this outer tube 36 is provided with suitable brackets which support the finder, the rods for giving the slow motions in right ascension and declination, the microscope 37 for reading the declination and hour circles, and other details.

The object-glass tube 40 is of steel, and is slightly conical. It is attached to the central tube by an external flange as shown in Fig. 3. Adjoining this junction there is fixed on the end flange of the central tube the position circle 38, which is protected by a dust shield, while behind this circle is a disc 39 carrying two electric contact rings. At the opposite end of the object-glass tube is the object-glass mounting and slides which are shown in detail in Figs. 4 and 5. From these views it will be seen that the object-glass tube terminates in a flanged ring 42 to which is bolted a corresponding flange 41, formed on the cast-iron baseplate of the object-glass mounting; this baseplate carries the various attachments, which we shall now proceed to describe.

Referring to Fig. 4, it will be seen that on the outer side of the baseplate there are provided cylindrically planed guide surfaces 44, these surfaces being curved to a radius equal to the focal length of the object-glass, so that as the two halves of the latter are moved apart their distance from the focal plane of the telescope is not altered. Suitable provision is made for the lateral guidance of the object-glass slides and the latter are kept pressed against the cylindrical surfaces on which they move, by the rollers 47, the pressure of these rollers being adjustable by the screws shown. The object-glass slides 46 are of cast iron and are made as stiff and light as possible. To them are bolted the object-glass mountings 48, one of these being fixed rigidly to its slide, while the other is so fixed as to be capable of a small adjustment to secure the coincidence of the images formed by the two parts of the object-glass. The object-glass slides are protected from dust by the sheet metal casing 49, but this casing necessarily has a large front opening to permit of the movements of the object-glass slides. As far as possible, however, this opening is protected by the two screens 50, which move with the object-glass slides. At 51 is a thermometer which shows the temperature of the scales.

The two object-glass slides move simultaneously in opposite directions, the limit of movement of each being an arc of 1° on each side of the centre. As shown in Fig. 5, the two slides are connected by links 53—having ball-and-socket joints—to the

Digitized by Google

equal arms of a lever 52, one arm of this lever being prolonged and coupled by double links to the nut of the distance screw 54. This screw is carried by a spherical bearing, and is connected by bevel gear, as indicated in Fig. 4, to a rod 30, which we have already mentioned as passing through the tube of the telescope to the eye-end.

The graduations of the object-glass scales—which are situated at 55—have been marked on thin plates of platino-iridium, which easily adapt themselves to the cylindrical surfaces of the scales. The two plates are placed close together, one on each side of the plane on which the object-glass is divided, and they can both be simultaneously seen in the reading microscope. This latter is within the telescope tube, and is fixed radially to the divided scales, but is slightly inclined to one side simply to give room between its eye-piece and the eye-piece of the telescope ; it is marked 29 in Figs. 2 and 4. The microscope is held in position by two rings, one situated at the smaller end of the conical tube 40, and the other near the head of the eye-piece ; by loosening these rings the microscope can be removed.

When measuring the distance between two objects of very different degrees of luminosity, it is often of advantage to be able to reduce the brightness of the more luminous object. To enable this to be done in the instrument we are describing, there are provided series of gauze screens of different thicknesses which can be brought in front of either half of the object-glass. One series of these screens consists of single, double, and treble wire gauze mounted on the segments of a light wheel 56 placed as shown in Figs. 4 and 5, so that any segment can be brought in front of either half of the object-glass. The wheel 56 is mounted on a pivot carried by the frame 41, and it can be rotated from the eye-end of the telescope by means of the rod 32 and an intermediate pinion. The axis of the wheel is divided into six sectors separated by very light spokes. Five of these sectors are of equal size, and of these three are covered with single, double, and treble wire gauze respectively, while the two others are blank. The remaining, or sixth, sector is twice the size of the others and is also blank. By this arrangement either half of the object-glass can be covered by a screen of the desired thickness, or both can be left free as shown in Fig. 5. If it should be necessary two other gauze frames may be mounted on the wheel, thus giving further gradations.

When the observer rotates the screen wheel by means of the rod 32, a disc at the eye-end similarly divided to the screen wheel denotes in what position the latter is. Further provisions for screening the light have also been made. The wheel just described may be removed and a disc carrying diaphragms of various apertures may be placed in front of either half of the objective. The disc, or rather half-disc, is in this

Digitized by Google

case hinged in a line with its diametrical edge to the small brackets 57, and it can then be turned over either half of the objective by bevel gear on the supporting pivot of the screen wheel, this pivot being actuated as before from the eye-end by the rod 32. Finally, provision is made for another mode of screening simultaneously with the use of the screen wheel. This consists of two light plates 58 (shown dotted in Fig. 4) which are suspended inside the objective, the arrangement being such that their line of suspension may be made to coincide with the line of division of the object-glass—in which case they exercise no screening effect—or may be more or less inclined to either half. The device is a little complicated, but an index hand near the eye-piece shows the observer the position which the plates occupy.

We have mentioned that the divisions of the plates showing the positions of the two halves of the objective can be read from the eye-end by the microscope 29. In addition to this there is another microscope 60, placed as shown in Figs. 4 and 5, by which these divisions can also be read and compared with each other. This microscope 60 slides on the path 59 having a cylindrical surface, so that the microscope can be moved concentrically over the divisions, or shifted back out of the way of other observations as shown in Fig. 4. The micrometer 61 of this microscope is not fixed directly to the microscope tube, but is mounted on a slipping piece which is moved by a screw of the same pitch as the micrometer screw. By means of this slipping piece, what would ordinarily be the fixed pair of wires of the micrometer can be adjusted to one division, and the other pair of wires, carried by the micrometer frame to the next, the drum of the micrometer screw then showing the distance between them. By this arrangement one reading suffices for one line of each division, the not unreasonable assumption being made that the zero of the micrometer will not change during short periods. The same convenient device is employed in the micrometers of the reading microscopes of the scales and circles.

In addition to being capable of being operated from the eye end of the telescope the object-glass slides can be moved by the key 62 shown in Figs. 4 and 5. The same views also show the counterpoise 63 and the small mirror 64, which is carried by a light rod inside the objective, and which serves to illuminate the field. In Fig. 4 is also shown a cap 64A, which is fixed at the side of the telescope tube and which contains a small electric incandescent lamp serving to illuminate the divisions of the objective slides, the light being directed on the latter by the small diagonal mirror shown by a dotted line at the end of the microscope 29.

We have now to speak of some further details connected with the sleeve 16, shown by Figs. 2 and 3. In addition to the friction wheels 35 already mentioned, the flange of this sleeve next the objective carries two indices, 65, for the position circle,

Digitized by Google

while two other indices, 66, for the declination circle are carried by the central portion of the sleeve as shown in Fig. 3. Both the circles just mentioned are read from the eye end of the telescope by the microscopes 37, 37, which are carried by mountings 67, a prism 68, occupying half the field, being provided for reading the declination circle, while the line of sight through the other half of the field passes direct to the position

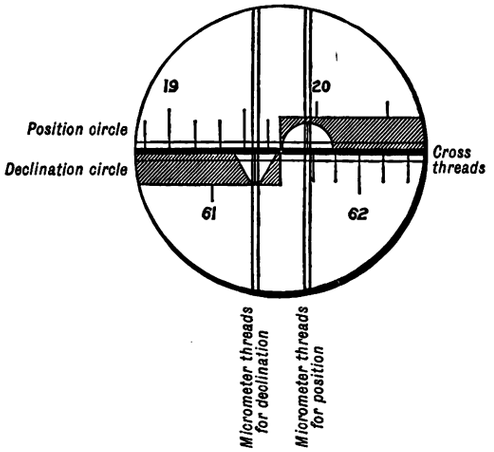

FIG. 7.

circle. By this arrangement the provision of separate microscopes for each circle is rendered unnecessary. The micrometers with which the microscopes 37 are fitted resemble that provided for reading the divisions of the object-glass slides. They are, however, provided with duplicate sets of wires, one set for each half of the field of view. The image of the divisions of the two circles, with the two sets of micrometer wires as seen in each microscope, is shown in Fig. 7 annexed. From this view it will be seen that a diaphragm has been inserted in each half of the field, one diaphragm having a semicircular and the other a triangular notch in it so as to clearly distinguish the scales of the two circles. The necessary illumination of the field is given by an incandescent lamp contained in a casing having two bull's-eye lenses 70, throwing the light on diagonal reflectors 69 provided at the ends of the cross-tubes of the two microscopes.

The arrangements for rotating the telescope tube, and thus adjusting the line of section of the objective to any desired angle, are also shown by Figs. 2 and 3, and by Fig. 6. Four different movements may be imparted. The quickest movement is effected as follows: At the eye end of the telescope (see Fig. 6) is a hand ring 73, which runs between friction wheels, and is provided with teeth on its inner periphery. These teeth transmit motion to a pinion on a spindle carrying at its other end another pinion, which through an intermediate wheel gives motion to the inner ocular tube,

Digitized by Google

the end flange of the latter carrying a geared ring 72 (see Figs. 2 and 3). The transmission spindle just mentioned carries at its end a head 74 (see Fig. 6), which if turned directly affords the second speed. The fourth, or slowest speed, is given by means of a tangent screw 75, Fig. 2, which is carried by a ball bearing on the flange of the telescope sleeve, while its nut is double-jointed to a ring 76, which encircles the flange of the inner ocular tube. This ring is provided with a clamping screw 77, which through the intervention of bevel gear and rods is operated from the eye-end by means of the handwheel 78, Fig. 6. In the same way the tangent screw 75 is also operated from the eye-end by the handwheel 79. Finally, the handwheel 80 is connected by gearing to the rod carrying the handwheel 79, and it can thus be used to give the latter a more rapid motion than if used direct; this constitutes the third speed of movement.

It will thus be seen that near the star-shaped head of the outer eye-piece tube, which is not capable of rotation, we have the hand ring 73 and the four handwheels 74, 78, 79, 80 giving position movements to the object-glass mounting; also the bearings for the four keys 18, 19, 20, and 21 by which the declination clamp and slow motion, and the right ascension clamp and slow motion are respectively operated; and also the supports for the microscopes 37 by which the declination and hour circles can be read. Close to the microscopes will be likewise seen two small slates 81, for recording observations, and near them are also two knobs, 82, for moving the telescope by hand.

The finder 83 (see Fig. 1, and Fig. 6), is of 3·15 in. aperture and 1 ft. 7 in. focal length; it has a field 4° in diameter, and is provided with a micrometer in which a right and left-hand screw shifts two wires simultaneously from the centre to the borders of the field. This arrangement enables the observer to take in the large field of the finder an approximate measure of two objects to be afterwards dealt with in the telescope. The object-glass of the finder was made by Dr. Schroeder.

The various parts of the eye-piece end with which we have just been dealing are fixed, as we have said, to the outer casing tube, which does not revolve with the telescope. Adjoining these, but moving with the telescope, are the ordinary micrometer 84 (see Figs. 1 and 6), the registering micrometer 85 at the end of the microscope for taking readings of the divisions of the object-glass slides; and the three keys 30, 31, and 32 respectively operating the object-glass slides, the screen-wheel, and the radial screen shutters. The key 31 carries a finger moving over a graduated scale, and it also moves a small wheel shaped like the screen-wheel and moving with the latter.

Digitized by Google

The registering micrometer 85 is mounted on a slipping piece, so that its fixed wires can be adjusted in the same way as those of the micrometer 61 (for examining the divisions of the object-glass slides) already described. This micrometer 85 is so arranged that instead of taking the readings from the drumhead of the micrometer screw and an adjacent arc showing the total number of revolutions, an impression is made upon a travelling paper slip. The impression is produced by the action of a quick-threaded screw in the manner afterwards described.

The illumination of the ordinary non-registering micrometer is so arranged that the light of an incandescent lamp enters from behind. The drum of the micrometer screw has its figures reversed, and the readings are taken by means of a small mirror in which the illuminated graduations are reflected. The arrangement is such that a farsighted observer scarcely has to move his head to read the micrometer; when required, however, a small magnifying lens can easily be added (see Fig. 11).

The electrical leads for the illumination of the instrument and for bringing the key at the eye-piece end into communication with a chronograph, comprise four wires which emerge from the upper part of the column, as shown in Fig. 1. Two of these wires split into two pairs, of which one pair conveys the lighting current to the two microscopes for reading the hour circle. The remaining four wires pass down to the counterpoise 11, the current entering there through four contact rings to leads which pass through the polar axis. At the large opening in the declination sleeve the current is again transferred by suitable contact arrangements to leads passing through the declination axis, whence two wires pass to the chronograph contact apparatus at the eye-end. The remaining two wires again split, one pair of wires passing to a switch near the end of the outer ocular tube, while the other pair passes to the two large contact rings 39 behind the position-circle, thus conveying the current to the revolving part of the telescope. Three incandescent lamps have to be illuminated by these last-named leads. Of these lamps, one, 64A (Fig. 4), has already been dealt with; the second (at the eye-end) illuminates the drum of the micrometer 84 at the eye-end, the divisions of the ocular draw-tube and the disc and hand denoting the positions of the screens and shutters at the object-glass end; the third (also at the eye-end) sends its light on to the small mirror 64 (Fig. 4), which, by reflection, illuminates the field. The light of this last-named lamp can be reduced at pleasure by the introduction of resistances; the two others can be turned on or extinguished independently by means of a switch on the inner ocular tube. Another switch on the outer ocular tube conveys the current either to lamp 69 on the cradle 16 of the central tube (see Fig. 3), and simultaneously to two lamps for the microscopes for declination and position

Digitized by Google

readings (lighting also the small slates 81); or alternatively to a lamp for the micrometer of the finder. This last current, of course, has to be conveyed through contact rings as the micrometer has a movement of rotation.

The clockwork by which the telescope is given its diurnal motion in right ascension stands at the foot of the central column, as shown in the general view, Fig. 1. From the clockwork the motion is transmitted by the shaft 87, and the arrangement of bevel gear already mentioned to the worm 4 which moves the driving circle. A noticeable feature in the clock-driving arrrangements is the form of governor used. This is an elastic pendulum 89 consisting of a long steel rod rigidly fixed at its lower end, and carrying at its upper end a heavy weight. At the top of this weight is a small pivot which is caught by a fork projecting from the last vertical driving shaft of the clockwork. The weight is prevented from occupying an exactly axial position, and thus when driven round by the clock it describes a circle, the radius of which is dependent upon the speed of rotation and the resistance to flexure of the steel rod by which the weight is supported. The increase in the radius of this circle due to the action of centrifugal force consequent on a slight increase of angular speed thus produces a much greater increase in the actual velocity of the weight, and thus enables the inertia of the latter to equalise considerable variations in the relation of the driving power to the resistance. The capability of this governor for absorbing surplus power depends upon the molecular friction set up by the bending of the steel rod. This governor is identical in principle with that long used on the Hughes printing telegraph instruments, but it was independently invented by Messrs. Repsold, whose application of it to the driving clockwork of telescopes is certainly original. Its performance is most satisfactory.

The observing seat used is clearly shown by the general view, Fig. 1, and it is of the same pattern as that supplied by Messrs. Repsold to the 30-in. refractor at the Pulkowa Observatory. The timber frame 91, slightly raised above the floor line, runs on four wheels, the axes of which, if produced, would meet at a point situated vertically below the centre of movement of the instrument. The wheels therefore roll round this point as a centre, the single rail of square section on which the outer wheels run being curved to a suitable radius. On the bottom framing 91 are fixed two inclined timbers 92 supported by uprights. On one edge these inclined timbers are provided with rails on which slides the platform 93, this being further supported by the toothed wheels 95 engaging the racks 94 fixed on the other edges of the inclined timbers. The weight of the platform 93 and of the observer is approximately balanced by the counter-weight 98 attached to a rope which passes over the pulley 97. By means of the handwheel 96, or the hand rope 104 passing over it, the observer can readily raise or

Digitized by Google

lower himself as required. The platform 93 is provided with the seat 102, the steps 101, and the small table 103. The observer can either sit on the seat or on the platform 93 itself. To give the whole carriage movement in azimuth the observer uses the hand rope 100 which runs over a series of pulleys, the last of which operates a pinion, the teeth of which engage with teeth formed on one of the large wheels supporting the carriage as shown.

The above description of the Cape Heliometer is only slightly altered from the original one written for "Engineering" (*loc. cit.*) by Messrs. Repsold. It remains to supplement it in a few points which refer to the practical working of the instrument. The same eye-piece has been used throughout the whole of the observations—it magnifies 250 diameters. A reversing prism whose use is explained (Mem. R.A.S., Vol. XLVI., page 12) is attached to the eye-piece, the latter is used pushed home in its tube. By rotating the eye-piece *in its tube* the prism can be placed so as to change the apparent direction of measurement as the observer may desire. The tube itself has a screw cut upon its outer surface, and a dial or divided circle is also attached to the tube. The focussing of the eye-piece on the standard wire that marks the focal point is thus performed by rotating the tube into which the eye-piece fits ; the process can therefore be frequently repeated and the focus clamped at the mean reading.

The scales attached to the slides which carry the segments of the object-glass are each divided into 200 spaces. The division lines are exquisitely clean and sharp at the edges even when viewed under the unusual magnifying power of 100 diameters employed in the reading microscope. To this circumstance, coupled with the symmetry of the central electric illumination, is probably due the satisfactory fact, subsequently demonstrated in the investigation of the division-errors, viz., that the independent results for the errors of the same divisions agree as well when determined by different observers as when determined by the same observer ; in other words, the divisions are pointed upon by different observers practically without personal error.

Scale A is numbered from 0 to 200.

Scale B is numbered from 200 to 400.

The divisions are 0·5 millimetre apart. One revolution of the micrometer screw is = 0·5 millimetre, and thus, since the distance of the object-glass of the micrometer-microscope from the scale is $\frac{1}{4}$th of the distance of the object-glass from the micrometer webs, four revolutions of the micrometer screw correspond approximately with the length of the image of one normal division space of the scale.

Digitized by Google

In mean conditions—

The value of one division of the scale is = 40″·0952 ; consequently, if there is no error of run one revolution of the micrometer screw is = 10″·0238.

The micrometer head is divided into 100 parts, so that one division of the head is practically = 0″·1, and the embossed readings of the index and of the head can be read off on the tape with a probable error not exceeding 0″·01. The probable error of a single pointing is about ± 0″·02.

The run is adjusted so that the corrections are always *positive*, that is, a normal division space, instead of measuring 4·0 revolutions, measures in the mean 3·985 revolutions ; in other words, the mean run is + 15 (expressed in $\frac{1}{1000}$ parts of a revolution) over a space of 4 revolutions. This correction has remained constant within limits of ± 5 during the whole series of observations, as will be seen from the separate results, but the run determined at each sitting has been rigorously employed in the reduction of the observations of the same set.

The micrometer itself, with the printing apparatus attached, is shown in the accompanying Figures 8 and 9. The screw attached to the head *s* moves the micrometer-box, including the fixed wires which are mounted on a frame attached to the bottom of the box. The head S is fixed on the micrometer-screw, which moves a frame carrying a pair of webs parallel to the fixed webs. A description of the internal construction of a similar micrometer will be found in the *Encyclopedia Britannica*, 9th Edition, Vol. XVI., Art. Micrometer, p. 247, Fig. 17, and need not be here repeated.

The readings of the micrometer-screw are recorded on a ribbon of paper. By turning the quick acting screw P to the right, the cushion C (which is faced with a sheet of thin india rubber) presses the paper ribbon against an index edge and type wheels, and thus the beautifully cut divisions of the micrometer head, the numbers marking the $\frac{1}{100}$th parts of the head, the index and the number of revolutions are sharply embossed on the paper ribbon. Fig. 10 shows the record on the same scale as that given by the micrometer.

It must be mentioned that the pressure of the cushion C on the type wheels has no influence whatever upon the screw, as the drum head, which records the fractions of a revolution, and the arc, which prints the number of whole revolutions, are mounted on a hollow cylindrical steel axis, concentric with the axis of the screw but entirely disconnected from the screw itself. The only connection between the type-wheel and the screw-head S is by the pin *p* (which is screwed into S), the cylindrical end of

Digitized by Google

which acts in a slot cut in the type wheel. The teeth of the steel wheel, the edges of which mark the division of a revolution into 100 parts, have been cut on an accurate engine, and the wheel itself is screwed to the type wheel which numbers these divisions. The subsequent investigation of the errors of the screw shows that Messrs. Repsold have succeeded in making the hollow cylinder (on which the toothed wheel and type wheel rotate) perfectly concentric with the axis of the screw ; any error in this respect would have produced periodic error from excentricity of the divided head.

In reading off the scales the screw *s* is turned till the image of one of the divisions on one of the scales appears symmetrically placed between the so-called fixed wires, then the screw S is turned until the movable wires are pointed symmetrically with respect to one of the divisions on the other scale.

The parallel webs used for pointing on the divisions are 1·4 seconds of arc apart, from centre to centre of the webs, and even at this small distance the divisions are so exquisitely fine and sharp, as, when accurately pointed upon, to show thin white lines between the outer edges of the division and the inner edges of the spider webs, although the actual clear space between the spider webs is only $\frac{9}{10}$ths of a second of arc. The equality in thickness of these thin white lines affords the most delicate test for the accuracy of pointing on the divisions. The whole apparatus is most perfect in construction, and has facilitated the observations in a marked degree. By the use of two screws, one to point the fixed webs and another to point the movable webs, a single printing records the relative positions of the two scales, and the observer is spared the loss of time and exposure of his eye to glare of a lamp, inconveniences which are unavoidable when the readings have to be written down.

The record on the embossed ribbon can also be preserved for future reference, so that all suspected errors of reading may be examined at any future time.

Fig. 11 shows the screw-testing apparatus attached to the micrometer ; the apparatus for printing the divisions of the head is removed, and an arm is substituted, carrying a mirror M, a lens L, and a small electric incandescent lamp, concealed by the cover C, because eye-readings are more convenient than printed readings in investigations of the screw errors.

The screw-testing apparatus consists of a small microscope having two pairs of webs in the common focus of the objective and eye-piece, Fig. 11, one pair being moved by the screw R, the other by a similar opposite screw. The apparatus screws into the

Digitized by Google

eye-piece slide of the micrometer in lieu of the eye-piece; its parallel webs can be adjusted at any desired distance apart, and this distance can be measured in terms of different parts of the micrometer screw.

The eye-piece of the Heliometer itself is furnished with a slide which carries metallic wires arranged as in Fig. 12.

The slide can be moved by a convenient screw in the direction marked by the dotted line.

When the screw is turned to its full limit in one direction, the centre of the square A marks the centre of the field of the eye-piece (*i.e.*, the axis of collimation), and when the screw is turned to its full extent in the opposite direction, the square B marks the centre. The side of square A is = 2′ of arc, that of square B = 40″. Square A is intended for use with low powers; most of the pointings have been made in the centre of square B. Two sides of the squares have been carefully adjusted parallel to the motion of the optical centres of the segments when the latter are moved in distance.

When, for any purpose, it is desired to make observations without the use of the squares, the slide can be placed in an intermediate position, so that the squares A and B are out of sight on opposite sides of the field of view.

Another useful adjunct to the Heliometer, added at my request by Messrs. Repsold, is the position-micrometer attached to the finder. It has happened in course of my experience that some previously unknown object, such as a comet, is encountered, perhaps in the morning dawn or evening twilight, and, without such an adjunct as a finder with position micrometer, the astronomer may lose the whole available time for observation in the vain endeavour to find a suitable comparison star. But with such a position micrometer attached to a finder he has no difficulty. Directing the finder to the comet he has at once in the field of view all available comparison stars. Having selected the most suitable star, he directs, by means of the slow motion handles in R.A. and Decln., the axis of the finder to the estimated middle point between the comet and the star, turns the finder-micrometer in position-angle until the images of the comet and star lie symmetrically between the parallel position wires, and then turns the micrometer screw (which moves the distance wires symmetrically from the centre in opposite directions) till one bisects the comet and the other the star. This latter process may involve also a slight change in the direction of the axis of the collimator by the R.A. and Decln. handles to insure the bisection of both objects simultaneously, but this simply results from an error in the original estimate of the middle point between the objects. The reading of the position-circle of the finder is then the

Digitized by Google

reading to which the position-circle of the Heliometer should be set, and from the readings of the micrometer screw he finds, by a convenient table, the proper settings of the Heliometer Scales in distance. On setting the Scales and position-circle the comet and the selected comparison star appear together in the centre of the field of view.

The finder-micrometer has also been found very useful in selecting the most suitable comparison stars for investigations on stellar parallax.

The electric current for the small 7-volt incandescent lamps which are employed for the illumination of the instrument, is supplied from 4 accumulator cells of 90 Ampere hours capacity, which are charged once a week in series with other similar groups of cells employed in the various detached observatories. The system has now worked perfectly, without a single failure, for six years.

Digitized by Google

FIG. 1.

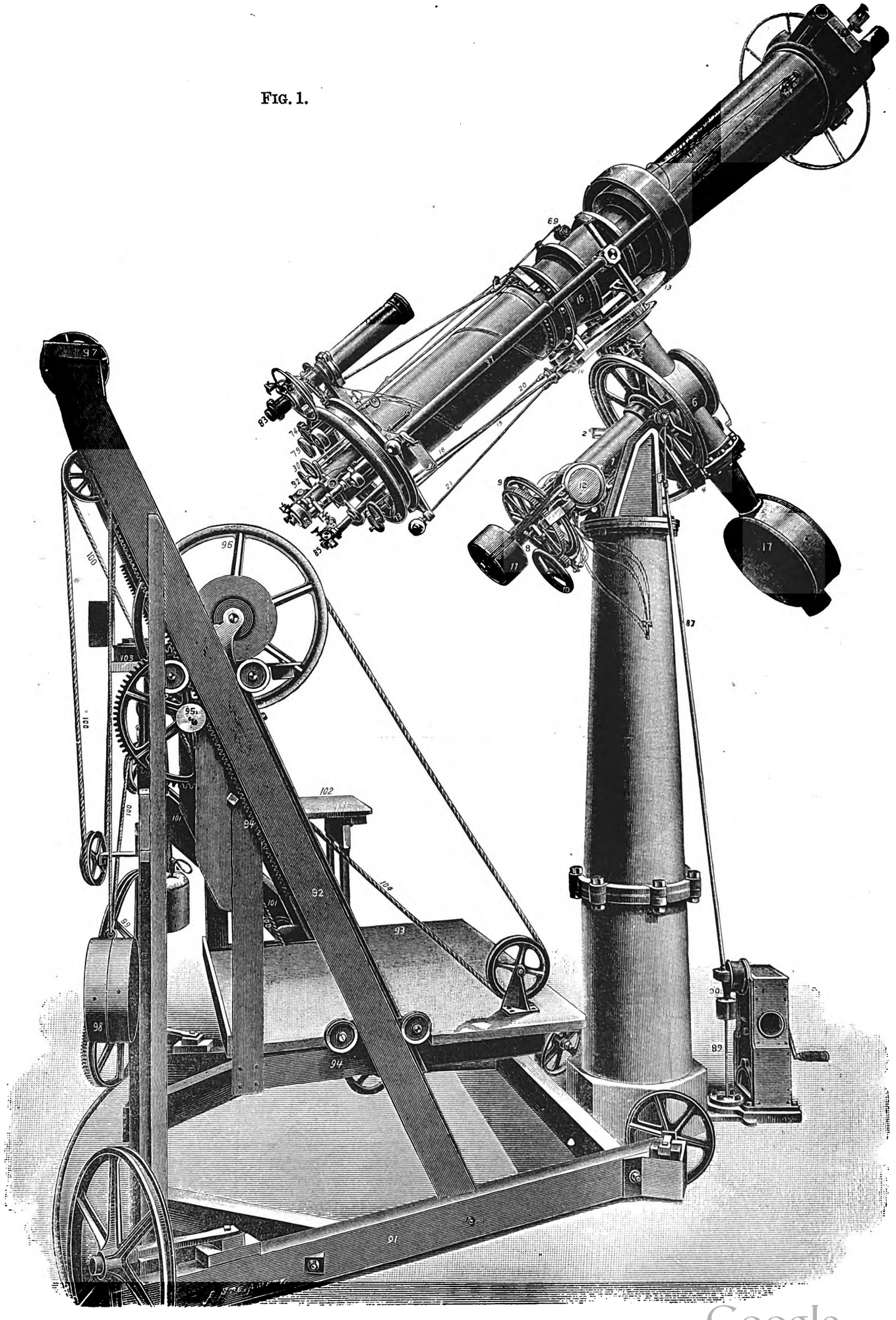

Digitized by Google

Fig. 2.

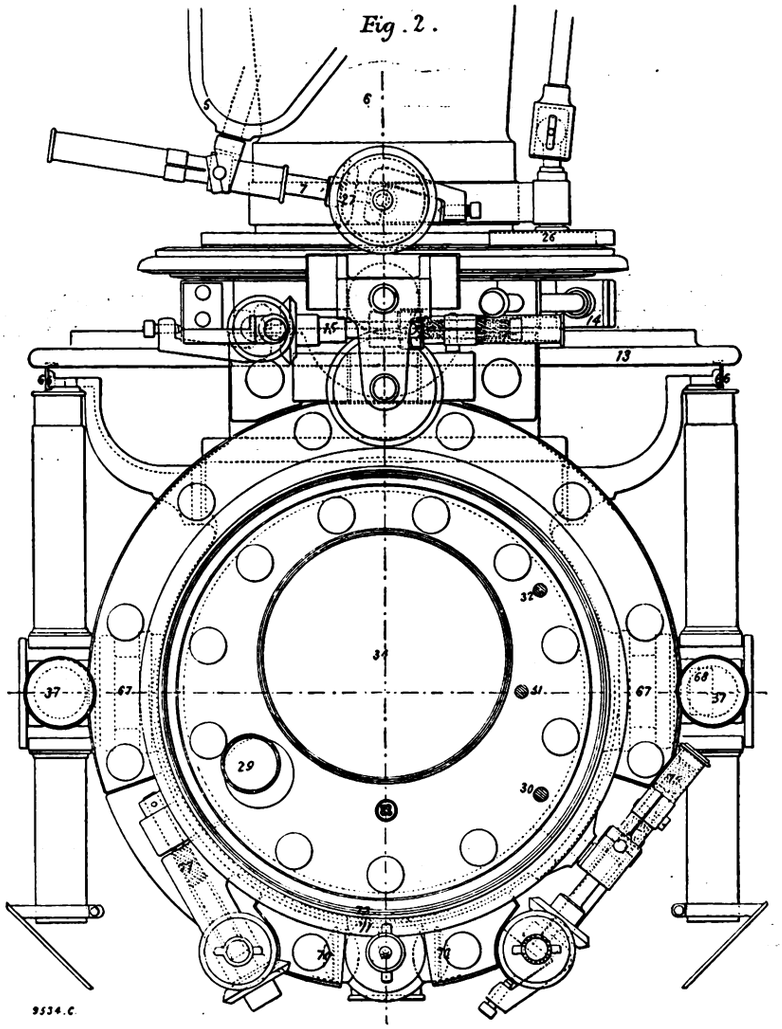

Digitized by Google

Fig. 3.

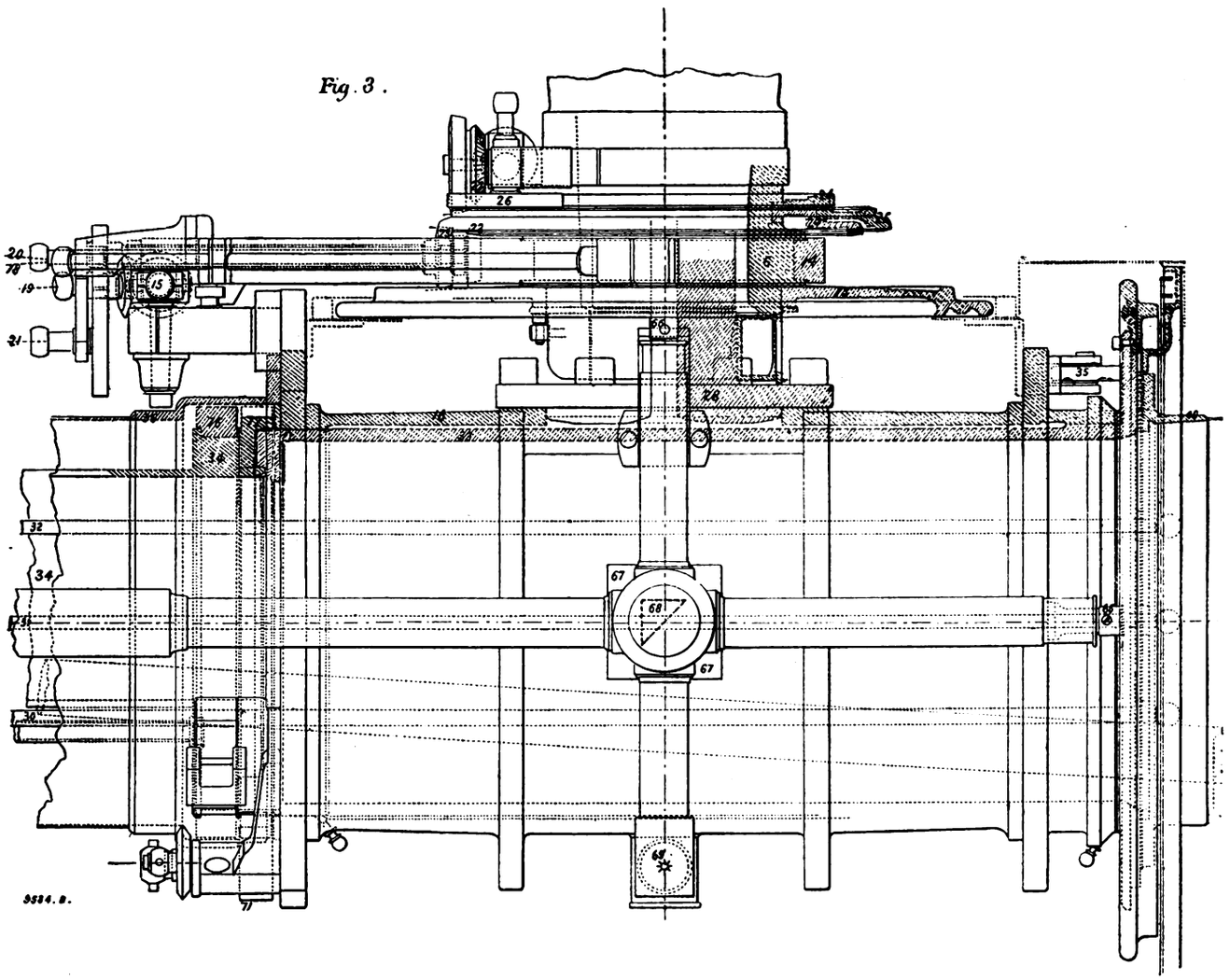

Digitized by Google

Fig 4

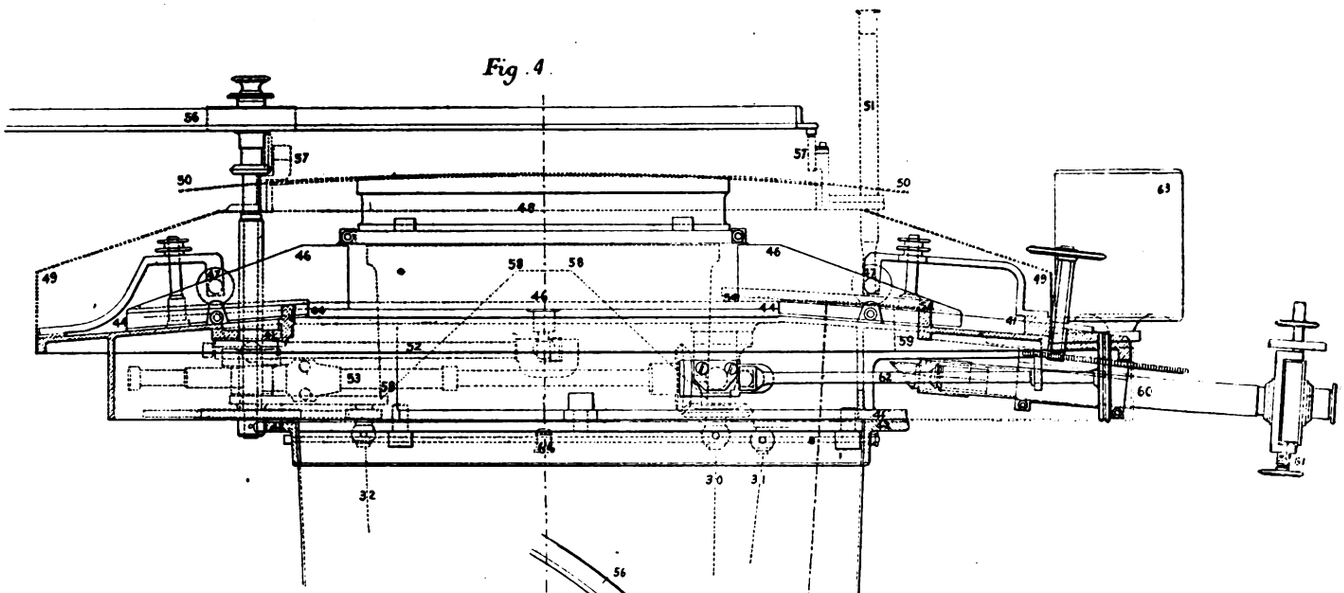

Fig 5

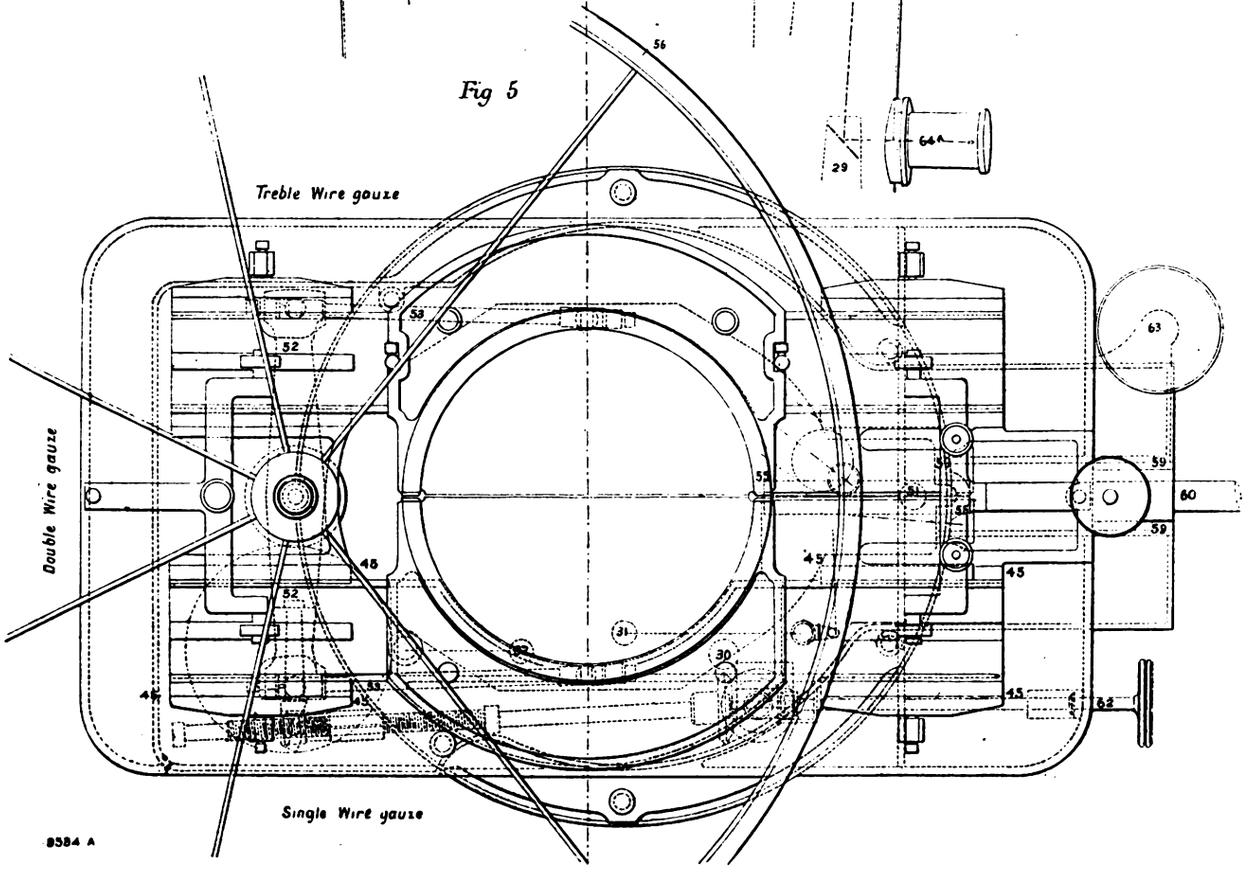

Digitized by Google

Fig. 6.

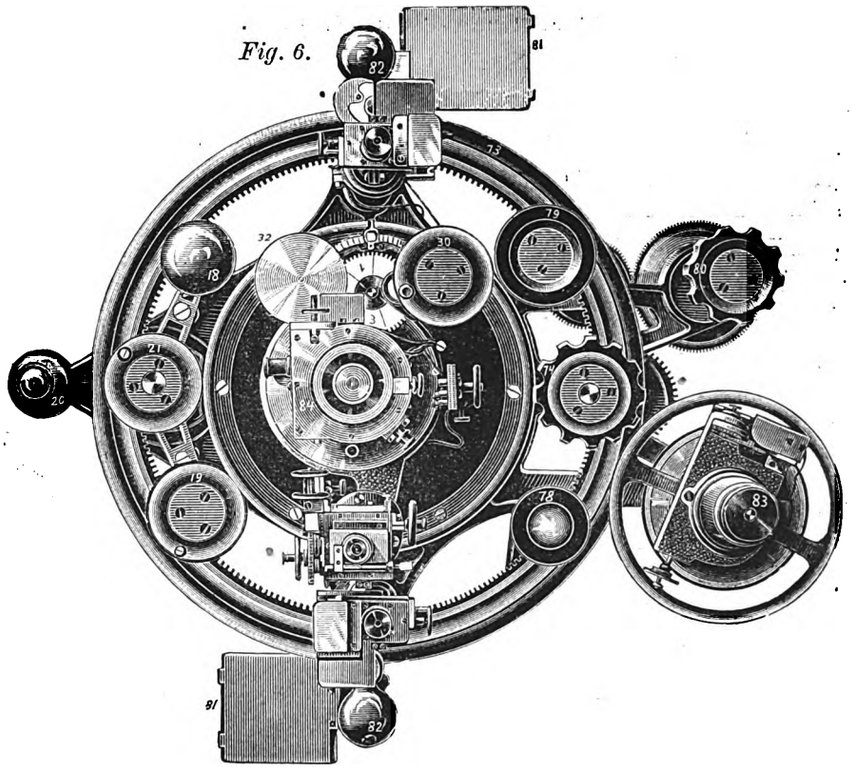

Fig. 7. *See* page 9.

Fig. 8

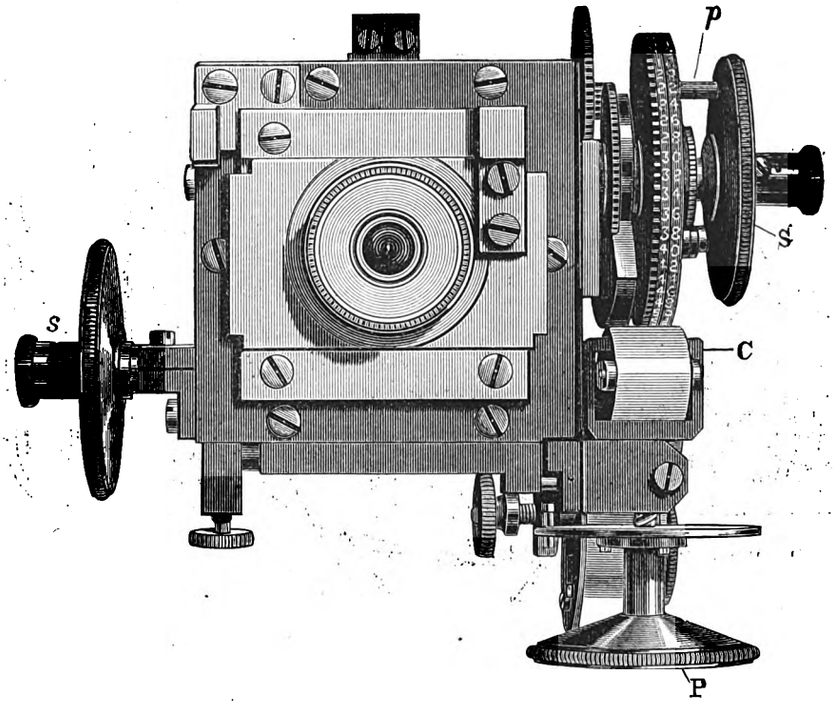

Digitized by Google

Fig. 9.

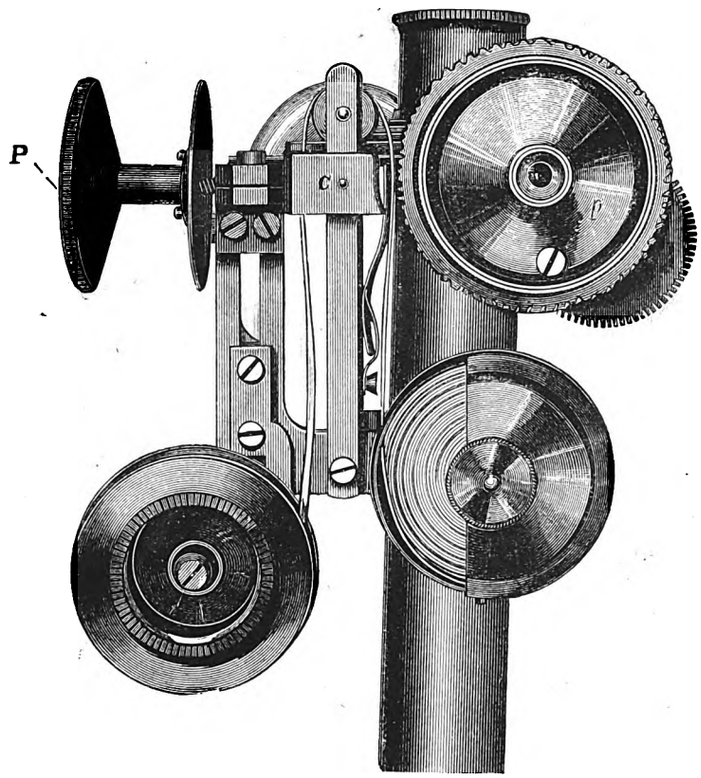

Fig. 10.

Corresponding reading	-	-	4·365	r	-	-
,,	,,	-	-	4·405	-	-
,,	,,	-	-	5·285	-	-
,,	,,	-	-	5·545	-	-

Digitized by Google

Fig. 11.

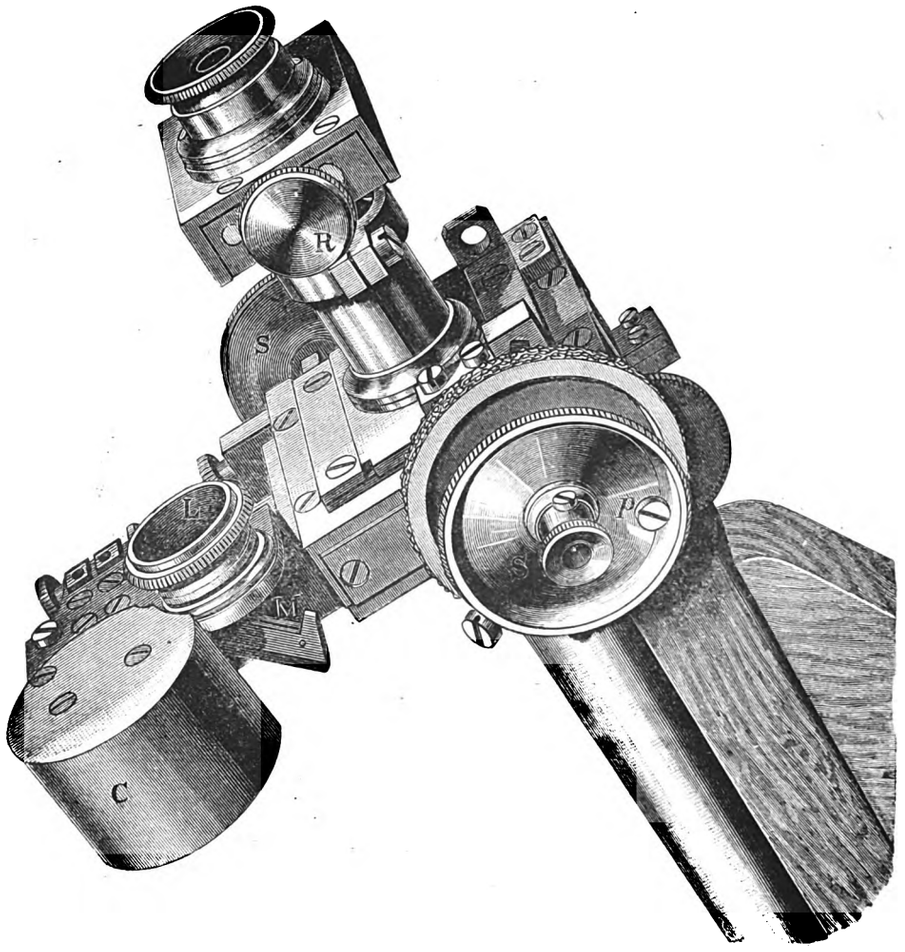

Fig. 12.

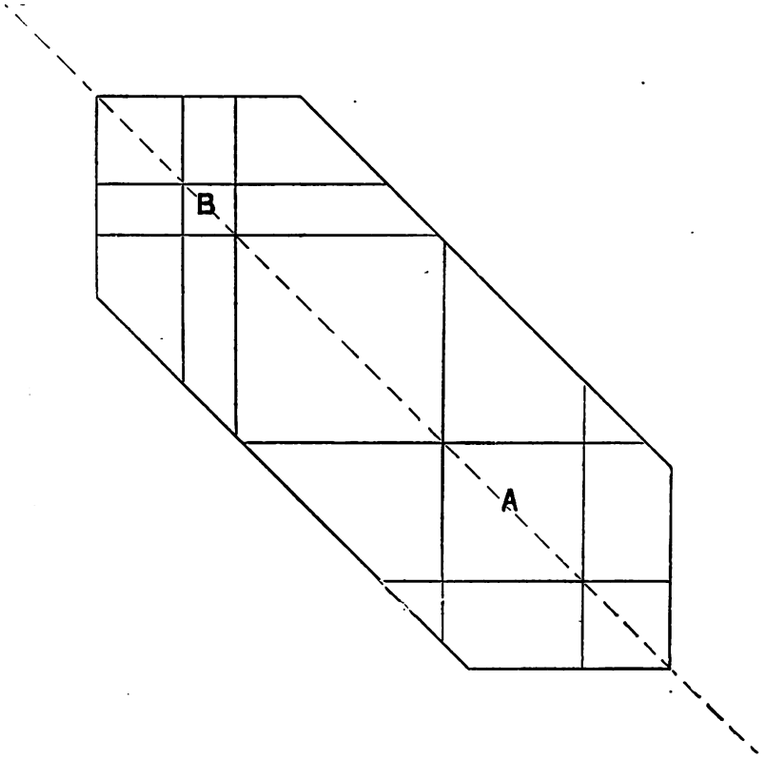

Digitized by Google

DETERMINATION OF THE ERRORS OF THE SCALE-MICROMETER SCREW OF THE CAPE HELIOMETER.

The errors of the scale-micrometer-screw have been investigated by means of the screw testing apparatus already described.

In the original apparatus the eye-piece was immovably fixed as in Fig. 11 (though it is intended subsequently to mount the eye-piece on a slide), thus if spaces much greater than one revolution were measured, the bisections had to be made inconveniently near the edge of the field of view, therefore, in the investigation of the screw, only successive single revolutions were compared together. The observations were arranged symmetrically by comparing revolutions 1–2, 2–3, - - - - - - - 6–7 successively with a fixed interval of the testing apparatus, and then the process was immediately repeated in the reverse order. The observers were Mr. W. H. Finlay (WHF) and Mr. Henry Sawerthal (HS). The results are given in the following table, the notation and methods are Bessel's ('*Astronomische Untersuchungen*,' Vol. I., pp. 79–80).

COMPARISON OF A SPACE ON THE SCREW-TESTER (EQUIVALENT TO ABOUT ONE REVOLUTION) WITH EACH SUCCESSIVE REVOLUTION OF THE MICROMETER-SCREW.

1888.	1–2	2–3	3–4	4–5 w^1-u-f	5–6	6–7	Space. f	Observer.
	r	r	r	r	r	r	r	
Nov. 30	+·0001	−·0017	−·0002	−·0002	+·0016	+·0004	1·0068	WHF
Nov. 30	− 19	− 11	− 9	+ 9	+ 21	+ 9	1·0068	WHF
Dec. 5	+ 9	+ 4	+ 2	+ 4	− 10	− 9	1·0119	WHF
Dec. 5	− 2	− 2	− 4	+ 4	− 3	+ 7	1·0126	WHF
Dec. 6	− 5	+ 2	+ 20	− 6	− 4	− 7	1·0152	WHF
Dec. 6	+ 2	+ 3	+ 5	+ 4	− 11	− 3	1·0155	WHF
Jan. 19	+ 10	− 13	+ 1	− 1	+ 3	0	1·0080	HS
Jan. 21	0	+ 12	+ 12	+ 3	− 14	− 13	1·0099	HS
Jan. 22	+ 3	+ 7	+ 2	+ 6	− 9	− 9	1·0067	HS
Jan. 25	− 8	+ 4	+ 2	+ 8	− 7	+ 1	1·0080	HS

The means are—

r	r	r	r	r	r
−·00009	−·00011	+·00029	+·00029	−·00018	−·00020

and the *mean error* of each of these results is $\pm 0^{r}\cdot00027$.

Digitized by Google

We may therefore conclude that the successive revolutions are practically equal, since the apparent errors do not, in any case, sensibly exceed the mean error of determination ; and, as the maximum error does not amount to $0''\cdot003$, it may be safely neglected.

To investigate the periodic errors a space on the screw-tester, equivalent to about $\frac{1}{3}$ of a revolution, was measured by different parts of the micrometer screw beginning at each $\frac{1}{10}$ of a revolution as in Bessel's method, the investigation being carried out independently for each revolution with the exception of revolution 1–2. As the coincidence of the fixed and moveable wires takes place when the reading is about $1^r\cdot7$, it would only be possible (because of confusion caused by the fixed wires) to measure the periodic errors by the introduction of an additional moveable wire—and this would have been done had the investigation shewn it to be necessary. The periodic errors, however, proved to be identical for all the revolutions from 2·0 to 7·0, so that they may certainly be assumed similar for revolution 1·0 to 2·0.

The following are the results of the observations.

COMPARISON OF A SPACE ON THE SCREW-TESTER (EQUIVALENT TO ABOUT $\frac{1}{3}$ OF A REVOLUTION) WITH DIFFERENT PARTS OF THE MICROMETER SCREW.

	w^1-u-f. Revolution 2.										Space.	Observer.
	·0	·1	·2	·3	·4	·5	·6	·7	·8	·9	f	
1888.	r	r	r	r	r	r	r	r				
Dec. 8	+·00020	−·00040	−·00140	−·00180	−·00160	−·00020	+·00050	+·00150	+·00110	+·00210	0·33540	WHF
10	− 7	+ 83	− 157	− 177	− 177	− 117	+ 73	+ 133	+ 133	+ 213	·33417	WHF
13	+ 28	− 62	− 62	− 202	− 172	− 62	+ 98	+ 228	+ 58	+ 148	·33452	HS
14	− 13	− 73	− 193	− 173	− 303	+ 77	+ 157	+ 267	+ 127	+ 127	·33543	HS
1889.												
Jan. 12	+ 111	− 19	− 139	− 249	− 209	− 49	+ 91	+ 51	+ 181	+ 231	·33699	HS
14	+ 61	− 29	− 9	− 189	− 269	− 59	+ 61	+ 141	+ 131	+ 161	·33479	HS

Revolution 3.

1888.												
Dec. 11	+·00096	−·00124	−·00134	−·00214	−·00174	+·00026	+·00056	+·00036	+·00266	+·00166	0·33584	WHF
19	+ 41	− 59	− 129	− 149	− 249	− 119	+ 51	+ 31	+ 421	+ 161	·33769	WHF
15	+ 148	+ 68	− 162	− 192	− 162	− 102	+ 118	+ 128	+ 108	+ 48	·33872	HS
17	+ 229	+ 19	− 131	− 271	− 181	− 91	+ 39	+ 169	+ 99	+ 119	·33971	HS

Digitized by Google

	w^1-u-f. Revolution 4. ·0	·1	·2	·3	·4	·5	·6	·7	·8	·9	Space. f	Observer.
1888.	r	r	r	r	r	r	r	r				
Dec. 20	+·00003	+·00023	−·00097	−·00107	−·00317	−·00087	+·00053	+·00153	+·00173	+·00203	0·33877	WHF
1889.												
Jan. 14	+ 80	+ 30	− 150	− 250	− 150	− 160	+ 60	+ 220	+ 170	+ 150	·33520	HS
1888.												
Dec. 22	+ 29	− 81	− 221	− 101	− 121	+ 19	+ 89	+ 219	+ 129	+ 39	·33901	HS
24	+ 130	− 60	− 220	− 190	− 170	− 110	+ 120	+ 260	+ 180	+ 60	·33410	HS
Revolution 5.												
1888.												
Dec. 27	+·00087	−·00143	−·00133	−·00013	−·00173	−·00013	+·00007	+·00137	+·00077	+·00167	0·33733	HS
28	+ 149	+ 89	− 121	− 161	− 261	− 101	− 31	+ 219	+ 149	+ 69	·33701	HS
1889.												
Jan. 15	+ 172	− 138	− 328	− 248	− 238	− 98	+ 122	+ 242	+ 232	+ 282	·33678	HS
16	+ 164	+ 44	− 126	− 236	− 266	− 116	+ 94	− 26	+ 294	+ 174	·33596	HS
Revolution 6.												
1888.												
Dec. 31	−·00001	−·00101	−·00231	−·00191	−·00321	−·00076	+·00229	+·00269	+·00139	+·00209	0·33501	HS
1889.												
Jan. 3	+ 198	+ 138	− 182	− 212	− 232	− 83	+ 18	+ 168	+ 58	+ 178	·33592	HS
17	+ 34	+ 34	− 156	− 156	− 86	− 1	+ 4	+ 134	+ 164	+ 104	·34176	HS
18	+ 77	+ 47	− 103	− 153	− 253	− 132	+ 37	+ 137	+ 177	+ 117	·34323	HS

The means of these results are—

Rev.	·0	·1	·2	·3	·4	·5	·6	·7	·8	·9
	r	r	r	r	r	r	r	r	r	r
2	+·00033	−·00023	−·00117	−·00195	−·00215	−·00038	+·00088	+·00162	+·00123	+·00182
3	+ 128	− 24	− 139	− 206	− 192	− 72	+ 66	+ 91	+ 223	+ 124
4	+ 61	− 22	− 172	− 162	− 189	− 85	+ 80	+ 213	+ 163	+ 113
5	+ 143	− 37	− 177	− 165	− 234	− 82	+ 48	+ 143	+ 188	+ 173
6	+ 77	+ 30	− 168	− 178	− 223	− 73	+ 72	+ 177	+ 135	+ 152

The *mean error* of each of the above means, computed rigidly from the separate results of the preceding table (on the supposition that each result is equally accurate) is $\pm 0^r{\cdot}000295$.

Digitized by Google

If we consider the periodic error to be different in each revolution, the expressions for the corrections applicable to the screw readings are—

Rev.	r	r	r	r
2	$-\cdot000174 \cos u$	$-\cdot001045 \sin u$	$-\cdot000071 \cos 2u$	$+\cdot000178 \sin 2u$
3	− 44	− 1117	+ 33	+ 110
4	− 226	− 1076	− 155	+ 113
5	− 29	− 1211	+ 33	+ 68
6	− 82	− 1103	− 77	+ 220

The corresponding co-efficients of these periodic terms are thus identical for each revolution considerably within limits of the *mean error* of their determination. In fact the largest deviation from mean value (viz., the co-efficient of cos u, rev. 4) amounts only to ·000115, a quantity corresponding with 0″·00115 at a maximum. We may, therefore, adopt the mean of these co-efficients as applicable equally to all the revolutions of the screw, viz. :—

$$-\cdot000111 \cos u \quad -\cdot001110 \sin u \quad -\cdot000047 \cos 2u \quad +\cdot000138 \sin 2u.$$

The corresponding corrections are :—

Reading.		Reading.		Sum of the Corrections ½ Rev. apart.
u	r	u	r	r
·00	−·00016	·50	+·00006	−·00010
·05	− 41	·55	+ 49	+ 08
·10	− 63	·60	+ 86	+ 23
·15	− 82	·65	+ 111	+ 29
·20	− 97	·70	+ 121	+ 24
·25	− 106	·75	+ 116	+ 10
·30	− 107	·80	+ 98	− 09
·35	− 95	·85	+ 72	− 23
·40	− 71	·90	+ 42	− 29
·45	− 36	·95	+ 12	− 24

In order to permit the mechanical elimination of periodic error, Messrs. Repsold had originally mounted two pairs of parallel webs on the moveable frame at a distance of half a revolution apart, reckoned from the centre of each pair. It was intended that in each observation the divisions on one scale should be bisected by both of the double

Digitized by Google

webs as the mean of the two screw-readings is then free from periodic error depending on cos u and sin u. In the last column of the preceding table are given the sums of the corrections corresponding to two screw-readings half a revolution apart (these sums are of course equivalent to the sum of the corresponding corrections depending on cos 2 u and sin 2 u), and are equal to twice the outstanding errors of the screw which would result if no corrections had been determined for the micrometer screw, provided that each scale-reading is made by both pairs of webs. These outstanding errors, in this, and in every well made screw, are entirely insensible.

I have preferred, for the sake of avoiding possible mistakes in the observations, as well as for the sake of simplicity of reduction, to remove one pair of the webs, and to apply rigorously the actual corrections for scale and screw-error.

In the reduction of the planetary observations, however, no corrections for screw-error have been applied because the maximum error[1] (0″·011) can only occur in exceptional cases, and the motion of the planet, by changing the distance, very quickly eliminates the last trace of effect of screw-error in the mean of the observations.

DETERMINATION OF THE DIVISION ERRORS OF THE CAPE HELIOMETER SCALES.

The ordinary method for investigating the division-errors of graduated scales is by successive bisection or trisection, a process which necessarily gives rise to cumulative errors.

In Vol. II. of the Dun Echt Publications, page 48, it is shewn—

1st. There is a limited accuracy in the determination of the error of each division beyond which no amount of observation strengthens the result.

2nd. The limit of accuracy is different for different divisions, and seems to depend on the perfection of the surface and the cleanness of the cut.

3rd. For any division of the Dun Echt Heliometer the limit of accuracy is about one-third to one-fourth of the probable error of a single careful bisection.

It is therefore hopeless by any process of successive bisection to attain adequate accuracy in the error-determinations of the ultimate sub-division of a scale of 200 parts.

---

(1) It is subsequently shewn that only half the difference of the screw errors corresponding to the two micrometer readings of a complete observation enters into the resulting distance.

Digitized by Google

In the specifications for the Cape Heliometer, I accordingly made it a condition that Messrs. Repsold should arrange means to permit direct micrometric comparison of any part of either Scale with any part of the other, in order that the division-errors might be investigated without cumulative error. Messrs. Repsold, for this purpose, devised the admirable arrangement already described, but from structural considerations it was not found convenient to give the division-error microscope a range of more than two-thirds of the length of the Scales, and thus it is only possible to compare the lower half of either Scale with both halves of the other. A full description of the method employed for investigating the division-errors with the aid of this apparatus is given in the *Monthly Notices*, Vol. XLIX., pages 105–115.*

The results are there given for the division-error of each 10th division of the effective range of the Scales, viz., from divisions 10 to 190 on Scale A, and 210 to 390 on Scale B, and an account of the process need not be here repeated. The investigation of the sub-division of the 10-division spaces was then undertaken, on a plan precisely similar with that which was carried out for the sub-division of the halves of the whole Scale into parts of 10 divisions (*loc. cit.*). That is to say, each single division of a 10-division space on one Scale was compared with each single division of a 10-division space on the other Scale, on the following plan, which provides for the determination of the error of each single division by two independent processes.

Each division of the space 100 to 110 was compared with each single division of the space 210–220, and also with each single division of the space 290–300, and so on, thus :

$^{d}_{100}$–$^{d}_{110}$	sub-divisions	compared	with	those	of	$^{d}_{210}$–$^{d}_{220}$	and	$^{d}_{290}$–$^{d}_{300}$
110–120	„	„	„	„		220–230	„	280–290
120–130	„	„	„	„		230–240	„	270–280
130–140	„	„	„	„		240–250	„	260–270
140–150	„	„	„	„		250–260	„	250–260
150–160	„	„	„	„		260–270	„	240–250
160–170	„	„	„	„		270–280	„	230–240
170–180	„	„	„	„		280–290	„	220–230
180–190	„	„	„	„		290–300	„	210–220

* The reader is requested to correct the misprint on page 112, 2nd line (*loc. cit.*), and to read "the side equations are *rigidly* satisfied," instead of "the side equations are *rapidly* satisfied."

Digitized by Google

d d					d d		d d	
10–20	sub-divisions compared with those of				300–310	and	380–390	
20–30	„	„	„	„	310–320	„	370–380	
30–40	„	„	„	„	320–330	„	360–370	
40–50	„	„	„	„	330–340	„	350–360	
50–60	„	„	„	„	340–350	„	340–350	
60–70	„	„	„	„	350–360	„	330–340	
70–80	„	„	„	„	360–370	„	320–330	
80–90	„	„	„	„	370–380	„	310–320	
90–100	„	„	„	„	380–390	„	300–310	

The investigation was begun in July 1888, and carried on almost daily till February 1889, when it was discontinued because I found that the large amount of night observing then in hand rendered it undesirable to impose an additional strain upon my eyes. The work was resumed in November 1889, and completed in the end of February 1890. Towards the end of the work I availed myself of the occasional aid of some of my assistants, not only to accelerate its completion, but to test the degree of personality to which such investigations are liable. In some few cases, where the difference between two independent determinations amounted to so much as 0″·05 or 0″·06, a double independent series was made. The result has been in every case to establish the satisfactory conclusions—

a. That the mean of the two original results was sufficiently exact.

b. That the edges of the divisions are so sharply defined that no sensible personal error exists between the determinations by different observers.

The following tables contain the results of all the determinations of division-error:—

Column 1 gives the division of the scale.

Columns 2, 3, 4 and 5 give the four independent determinations of the error of each 10th division, derived from the original investigation described in Vol. XLIX. of the *Monthly Notices*. (These results are printed in the larger type.) The other figures of smaller type, contained in columns 4 and 5, give the separate results of the independent determinations of the single divisions, in those cases where the agreement of the original determinations was not considered sufficiently exact.

Digitized by Google

Columns 6 and 7 give the two original independent determinations of the single divisions.

Column 8 gives the mean result.

A letter prefixed to any of these determinations indicates that the observations were made by an assistant.

F indicates Mr. W. H. Finlay.

P „ „ R. T. Pett.

J „ „ H. Jacoby.

All the other determinations were made by myself.

The whole investigation depends upon nearly 50,000 pointings, which, in observation alone, occupied a period equivalent to nine continuous months at 2 hours daily.* The results, however, amply justify the labour.

The division-errors were of course originally determined in terms of revolutions of the screw (1 Rev. $=10''\cdot02$), but are here more conveniently tabulated in their equivalent value in seconds of arc.

* The work is very tiring to the eye and cannot be sustained with impunity for more than two hours daily.

Digitized by Google

RESULTS OF DIVISION-ERROR DETERMINATIONS OF THE SCALES OF THE CAPE HELIOMETER.

Division.	Separate Results for Division-Error.						Mean.
1.	2.	3.	4.	5.	6.	7.	8.
	″	″	″	″	″	″	″
10							0·000
11					+ ·028	+ ·028	+ ·028
12					+ ·015	+ ·013	+ ·014
13					− ·020	− ·020	− ·020
14					− ·019	− ·009	− ·014
15					+ ·017	+ ·048	+ ·033
16					+ ·051	+ ·062	+ ·057
17					+ ·090	+ ·116	+ ·103
18					+ ·019	+ ·039	+ ·029
19					+ ·021	+ ·045	+ ·033
20	+ ·039	+ ·079	+ ·070	+ ·080			+ ·067
21					P + ·072	P + ·097	+ ·085
22					P + ·039	P + ·049	+ ·044
23					P + ·029	P + ·020	+ ·025
24					P + ·052	P + ·040	+ ·046
25					P + ·007	P + ·025	+ ·016
26					P + ·119	P + ·111	+ ·115
27					P + ·101	P + ·128	+ ·115
28					P + ·101	P + ·104	+ ·103
29					P + ·162	P + ·162	+ ·162
30	+ ·065	+ ·083	+ ·077	+ ·107			+ ·083
31					+ ·199	+ ·192	+ ·196
32					+ ·122	+ ·132	+ ·127
33					+ ·195	+ ·175	+ ·185
34					+ ·160	+ ·160	+ ·160
35					+ ·163	+ ·162	+ ·163
36					+ ·214	+ ·191	+ ·203
37					+ ·161	+ ·161	+ ·161
38					+ ·145	+ ·141	+ ·143
39					+ ·209	+ ·210	+ ·210
40	+ ·229	+ ·247	+ ·236	+ ·240			+ ·238
41					+ ·242	P + ·205	+ ·224
42					+ ·127	P + ·079	+ ·103
43					+ ·197	P + ·193	+ ·195
44					+ ·194	P + ·153	+ ·174
45					+ ·198	P + ·163	+ ·181
46					+ ·175	P + ·177	+ ·176
47					+ ·228	P + ·205	+ ·217
48					+ ·143	P + ·120	+ ·132
49					+ ·177	P + ·145	+ ·161
50	+ ·141	+ ·151	+ ·144	+ ·148			+ ·146

Digitized by Google

Division.	Separate Results for Division-Error.						Mean.
1.	2.	3.	4.	5.	6.	7.	8.
50	+″·141	+″·151	+″·144	+″·148	"	"	+0″·146
51			+ ·168	P + ·129	+ ·189	P + ·118	+ ·151
52			+ ·127	P + ·085	+ ·108	P + ·084	+ ·101
53			+ ·089	P + ·061	+ ·094	P + ·060	+ ·076
54			+ ·109	P + ·103	+ ·099	P + ·081	+ ·098
55			+ ·074	P + ·060	+ ·073	P + ·043	+ ·063
56			+ ·062	P + ·077	+ ·052	P + ·095	+ ·072
57			+ ·033	P + ·019	+ ·034	P + ·041	+ ·032
58			+ ·056	P + ·063	+ ·037	P + ·077	+ ·058
59			+ ·021	P + ·026	− ·006	P + ·043	+ ·021
60	+ ·046	+ ·046	+ ·048	+ ·052			+ ·048
61					+ ·017	P + ·037	+ ·027
62					+ ·092	P + ·061	+ ·077
63					+ ·099	P + ·091	+ ·095
64					+ ·060	P + ·054	+ ·057
65					+ ·114	P + ·078	+ ·096
66					+ ·088	P + ·083	+ ·086
67					+ ·105	P + ·118	+ ·112
68					+ ·069	P + ·048	+ ·059
69					+ ·110	P + ·090	+ ·100
70	+ ·058	+ ·072	+ ·081	+ ·093			+ ·076
71					+ ·044	P + ·072	+ ·058
72					+ ·056	P + ·069	+ ·063
73					+ ·116	P + ·134	+ ·125
74					+ ·130	P + ·111	+ ·121
75					+ ·188	P + ·168	+ ·178
76					+ ·091	P + ·085	+ ·088
77					+ ·148	P + ·134	+ ·141
78					+ ·128	P + ·157	+ ·143
79					+ ·107	P + ·119	+ ·113
80	+ ·202	+ ·197	+ ·211	+ ·202			+ ·203
81					+ ·181	+ ·193	+ ·187
82					+ ·079	+ ·089	+ ·084
83					+ ·170	+ ·163	+ ·167
84					+ ·128	+ ·148	+ ·138
85					+ ·094	+ ·114	+ ·104
86					+ ·135	+ ·138	+ ·137
87					+ ·055	+ ·068	+ ·062
88					+ ·055	+ ·065	+ ·060
89					+ ·001	+ ·028	+ ·015
90	+ ·040	+ ·064	+ ·061	+ ·063			+ ·057
91					+ ·024	+ ·009	+ ·017
92					+ ·052	+ ·019	+ ·036
93					+ ·068	+ ·050	+ ·059
94					+ ·052	+ ·058	+ ·055
95					+ ·063	+ ·085	+ ·074
96					+ ·019	+ ·025	+ ·022
97					+ ·037	+ ·072	+ ·055
98					+ ·092	+ ·119	+ ·106
99					− ·014	+ ·005	− ·005
100							+ ·043

Digitized by Google

Division.	Separate Results for Division-Error.						Mean.
1.	2.	3.	4.	5.	6.	7.	8.
		"	"	"	"	"	
100							+ 0".043
101					+ ·112	+ ·101	+ ·107
102					+ ·070	+ ·079	+ ·075
103					+ ·031	+ ·061	+ ·046
104					+ ·037	+ ·068	+ ·053
105					+ ·113	+ ·111	+ ·112
106					+ ·049	+ ·059	+ ·054
107					+ ·025	+ ·047	+ ·036
108					+ ·027	+ ·053	+ ·040
109					+ ·086	+ ·112	+ ·099
110	+ ·008	+ ·031	+ ·055	+ ·050			+ ·036
111					— ·010	— ·018	— ·014
112					+ ·023	+ ·017	+ ·020
113					— ·043	— ·019	— ·031
114					+ ·035	+ ·046	+ ·041
115					+ ·020	+ ·036	+ ·028
116					— ·020	— ·026	— ·023
117					+ ·058	+ ·035	+ ·047
118					+ ·137	+ ·142	+ ·140
119					— ·037	— ·022	— ·030
120	+ ·020	+ ·040	+ ·036	+ ·048			+ ·036
121			J + ·016	P + ·021	+ ·005	+ ·012	+ ·014
122			J + ·053	P + ·036	+ ·025	+ ·065	+ ·045
123			J + ·044	P + ·078	+ ·032	+ ·067	+ ·055
124			J + ·004	P — ·033	— ·022	— ·018	— ·017
125			J — ·017	P — ·004	+ ·014	— ·006	— ·003
126			J + ·035	P + ·086	+ ·038	+ ·067	+ ·057
127			J + ·027	P + ·034	+ ·009	+ ·041	+ ·028
128			J + ·081	P + ·046	+ ·048	+ ·072	+ ·062
129			J + ·071	P + ·035	+ ·038	+ ·069	+ ·053
130	— ·044	— ·017	— ·017	— ·026			— ·026
131					— ·002	— ·007	— ·005
132					+ ·046	+ ·054	+ ·050
133					+ ·047	+ ·030	+ ·039
134					+ ·016	+ ·012	+ ·014
135					+ ·009	+ ·035	+ ·022
136					+ ·059	+ ·062	+ ·061
137					+ ·019	+ ·049	+ ·034
138					+ ·048	+ ·068	+ ·058
139					+ ·059	+ ·076	+ ·068
140	— ·052	— ·022	— ·017	— ·009			— ·025
141					+ ·030	P + ·045	+ ·038
142					+ ·045	P + ·062	+ ·054
143					+ ·094	P + ·090	+ ·092
144					+ ·082	P + ·050	+ ·066
145					+ ·078	P + ·021	+ ·050
146					+ ·069	P + ·073	+ ·071
147					+ ·092	P + ·079	+ ·086
148					+ ·058	P + ·057	+ ·058
149					+ ·110	P + ·114	+ ·112
150	+ ·074	+ ·085	+ ·092	+ ·121			+ ·093

Digitized by Google

Division.	Separate Results for Division-Error.						Mean.
1.	2.	3.	4.	5.	6.	7.	8
150	+ ″·074	+ ″·085	+ ″·092	+ ″·121	″	″	+0″·093
151					+ ·023	P − ·012	+ ·006
152					+ ·109	P + ·081	+ ·095
153					+ ·137	P + ·107	+ ·122
154					+ ·084	P + ·070	+ ·077
155					+ ·055	P + ·027	+ ·041
156					+ ·123	P + ·085	+ ·104
157					+ ·123	P + ·074	+ ·099
158					+ ·094	P + ·065	+ ·080
159					+ ·038	P + ·025	+ ·032
160	+½·070	+ ·071	+ ·075	+ ·096			+ ·078
161					+ ·112	P + ·089	+ ·101
162					+ ·130	P + ·110	+ ·120
163					+ ·077	P + ·059	+ ·068
164					+ ·057	P + ·072	+ ·065
165					+ ·049	P + ·055	+ ·052
166					+ ·096	P + ·128	+ ·112
167					+ ·097	P + ·113	+ ·105
168					+ ·050	P + ·060	+ ·055
169					+ ·028	P + ·057	+ ·043
170	+ ·041	+ ·074	+ ·047	+ ·055			+ ·054
171					− ·015	F − ·047	− ·031
172					+ ·059	F + ·045	+ ·052
173					+ ·052	F + ·012	+ ·032
174					+ ·094	F + ·057	+ ·076
175					+ ·029	F + ·028	+ ·029
176					+ ·102	F + ·046	+ ·074
177					+ ·030	F + ·045	+ ·038
178					− ·018	F + ·002	− ·008
179					− ·001	F + ·019	+ ·009
180	+ ·042	+ ·052	+ ·060	+ ·071			+ ·056
181					+ ·104	P + ·070	+ ·087
182					+ ·010	P + ·019	+ ·015
183					+ ·070	P + ·081	+ ·076
184					+ ·043	P + ·036	+ ·040
185					+ ·105	P + ·077	+ ·091
186					+ ·057	P + ·030	+ ·044
187					+ ·113	P + ·092	+ ·103
188					+ ·052	P + ·070	+ ·061
189					+ ·071	P + ·080	+ ·076
190							+0·105

Digitized by Google

Division.	Separate Results for Division-Error.						Mean.
1.	2.	3.	4.	5.	6.	7.	9.
210	"	"	"	"	"	"	0".000
211					+ ·029	+ ·026	+ ·028
212					+ ·025	+ ·042	+ ·034
213					− ·020	− ·017	− ·019
214					+ ·005	− ·009	− ·002
215					+ ·018	+ ·011	+ ·015
216					+ ·017	+ ·009	+ ·013
217					+ ·072	+ ·055	+ ·064
218					+ ·046	+ ·029	+ ·038
219					+ ·041	+ ·027	+ ·034
220	+ ·012	+ ·016	+ ·032	+ ·024			+ ·021
221					+ ·067	+ ·073	+ ·070
222					− ·020	+ ·030	+ ·005
223					+ ·038	+ ·062	+ ·050
224					+ ·015	+ ·010	+ ·013
225					− ·032	− ·021	− ·027
226					+ ·016	+ ·046	+ ·031
227					+ ·065	+ ·109	+ ·087
228					+ ·045	+ ·079	+ ·062
229					+ ·109	+ ·134	+ ·122
230	+ ·063	+ ·052	+ ·032	+ ·057			+ ·051
231					+ ·086	P + ·089	+ ·088
232					+ ·064	P + ·071	+ ·068
233					+ ·067	P + ·094	+ ·081
234					+ ·105	P + ·108	+ ·107
235					+ ·079	P + ·099	+ ·089
236					+ ·100	P + ·062	+ ·081
237					+ ·071	P + ·052	+ ·062
238					+ ·094	P + ·100	+ ·097
239					+ ·101	P + ·100	+ ·101
240	+ ·140	+ ·138	+ ·120	+ ·126			+ ·131
241					+ ·105	P + ·107	+ ·106
242					+ ·058	P + ·041	+ ·050
243					+ ·128	P + ·089	+ ·109
244					+ ·096	P + ·116	+ ·106
245					+ ·117	P + ·087	+ ·102
246					+ ·086	P + ·080	+ ·083
247					+ ·112	P + ·099	+ ·105
248					+ ·058	P + ·071	+ ·065
249					+ ·079	P + ·100	+ ·090
250	+ ·005	+ ·017	+ ·037	+ ·005			+ ·016
251					+ ·077	P + ·039	+ ·058
252					− ·002	P − ·001	− ·001
253					− ·035	P − ·013	− ·024
254					− ·038	P − ·025	− ·032
255					− ·075	P − ·049	− ·062
256					− ·092	P − ·074	− ·083
257					− ·136	P − ·099	− ·118
258					− ·102	P − ·077	− ·090
259					− ·113	P − ·127	− ·120
260	− ·147	− ·138	− ·110	− ·137			− ·133

Digitized by Google

Division.	Separate Results for Division-Error.						Mean.
1.	2.	3.	4.	5.	6.	7.	8.
260	— ″·147	— ″·138	— ″·110	— ″·137	″	″	—0″·133
261					— ·135	— ·144	— ·140
262					— ·088	— ·106	— ·097
263					— ·054	— ·067	— ·061
264					— ·085	— ·112	— ·099
265					— ·062	— ·073	— ·068
266					— ·070	— ·086	— ·078
267					— ·017	— ·052	— ·035
268					— ·076	— ·086	— ·081
269					— ·022	— ·031	— ·027
270	— ·074	— ·055	— ·049	— ·062			— ·060
271			J — ·095	P — ·073	— ·068	— ·114	— ·088
272			J — ·082	P — ·041	— ·070	— ·082	— ·069
273			J — ·074	P — ·036	— ·045	— ·064	— ·055
274			J — ·074	P — ·051	— ·048	— ·067	— ·060
275			J + ·015	P + ·031	+ ·031	— ·001	+ ·019
276			J — ·080	P — ·040	— ·047	— ·108	— ·069
277			J — ·064	P — ·041	— ·009	— ·050	— ·041
278			J — ·047	P — ·077	— ·023	— ·116	— ·066
279			J — ·090	P — ·076	— ·076	— ·099	— ·085
280	+ ·029	+ ·016	+ ·031	+ ·008			+ ·021
281					·000	F + ·004	+ ·002
282					— ·088	F — ·101	— ·095
283					+ ·009	F — ·031	— ·011
284					— ·035	F — ·035	— ·035
285					— ·076	F — ·069	— ·073
286					— ·016	F — ·023	— ·020
287					— ·125	F — ·109	— ·117
288					— ·089	F — ·099	— ·094
289					— ·159	F — ·142	— ·151
290	— ·093	— ·102	— ·105	— ·120			— ·105
291					— ·107	P — ·096	— ·102
292					— ·048	P — ·063	— ·056
293					— ·083	P — ·075	— ·079
294					— ·053	P — ·048	— ·051
295					— ·097	P — ·096	— ·097
296					— ·114	P — ·126	— ·120
297					— ·128	P — ·118	— ·123
298					— ·059	P — ·066	— ·063
299					— ·176	P — ·144	— ·160
300							— ·134
301					— ·160	— ·101	— ·131
302					— ·110	— ·091	— ·101
303					— ·147	— ·135	— ·141
304					— ·107	— ·087	— ·097
305					— ·090	— ·080	— ·085
306					— ·180	— ·173	— ·177
307					— ·178	— ·156	— ·167
308					— ·149	— ·138	— ·144
309					— ·090	— ·074	— ·082
310	— ·126	— ·143	— ·149	— ·150			— ·142

Digitized by Google

Division.	Separate Results for Division-Error.						Mean.
1.	2.	3.	4.	5.	6.	7.	8.
310	— ″·126	— ″·143	— ″·149	— ″·150	″	″	—0″·142
311					— ·214	P — ·206	— ·210
312					— ·179	P — ·182	— ·181
313					— ·174	P — ·142	— ·158
314					— ·137	P — ·140	— ·139
315					— ·120	P — ·093	— ·107
316					— ·175	P — ·155	— ·165
317					— ·131	P — ·126	— ·129
318					— ·047	P — ·053	— ·050
319					— ·150	P — ·168	— ·159
320	— ·099	— ·134	— ·144	— ·123			— ·125
321					— ·155	— ·121	— ·138
322					— ·092	— ·081	— ·087
323					— ·083	— ·065	— ·074
324					— ·161	— ·133	— ·147
325					— ·147	— ·152	— ·150
326					— ·101	— ·087	— ·094
327					— ·085	— ·082	— ·084
328					— ·106	— ·116	— ·111
329					— ·092	— ·084	— ·088
330	— ·147	— ·156	— ·166	— ·156			— ·156
331					— ·171	— ·179	— ·175
332					— ·119	— ·122	— ·121
333					— ·144	— ·123	— ·134
334					— ·080	— ·118	— ·099
335					— ·090	— ·101	— ·096
336					— ·145	— ·140	— ·143
337					— ·129	— ·110	— ·120
338					— ·072	— ·100	— ·086
339					— ·069	— ·068	— ·069
340	— ·146	— ·158	— ·192	— ·176			— ·168
341			— ·132	P — ·157	— ·166	P — ·157	— ·153
342			— ·143	P — ·185	— ·128	P — ·140	— ·149
343			— ·063	P — ·088	— ·066	P — ·080	— ·074
344			— ·082	P — ·076	— ·072	P — ·070	— ·075
345			— ·094	P — ·084	— ·089	P — ·075	— ·086
346			— ·104	P — ·113	— ·098	P — ·063	— ·095
347			— ·042	P — ·042	— ·032	P + ·037	— ·027
348			— ·102	P — ·054	— ·075	P — ·027	— ·065
349			— ·050	P — ·045	— ·030	P + ·021	— ·026
350	— ·079	— ·057	— ·088	— ·068			— ·073
351					P — ·090	P — ·048	— ·069
352					P + ·002	P + ·045	+ ·024
353					P — ·020	P + ·009	— ·006
354					P — ·083	P — ·074	— ·079
355					P — ·086	P — ·055	— ·071
356					P — ·103	P — ·060	— ·082
357					P — ·067	P — ·030	— ·049
358					P — ·082	P — ·067	— ·075
359					P — ·103	P — ·087	— ·095
360	— ·083	— ·085	— ·112	— ·112			— ·098

Digitized by Google

Division.	Separate Results for Division-Error.						Mean.
1.	2.	3.	4.	5.	6.	7.	8.
	″	″	″	″	″	″	″
360	— ·083	— ·085	— ·112	— ·112			—0·098
361					P — ·117	— ·077	— ·097
362					P — ·077	— ·058	— ·068
363					P — ·151	— ·129	— ·140
364					P — ·189	— ·153	— ·171
365					P — ·165	— ·156	— ·161
366					P — ·129	— ·077	— ·103
367					P — ·122	— ·108	— ·115
368					P — ·159	— ·155	— ·157
369					P — ·177	— ·163	— ·170
370	— ·154	— ·167	— ·193	— ·193			— ·177
371					— ·157	P — ·165	— ·161
372					— ·136	P — ·158	— ·147
373					— ·175	P — ·143	— ·159
374					— ·156	P — ·183	— ·170
375					— ·162	P — ·166	— ·164
376					— ·114	P — ·125	— ·120
377					— ·176	P — ·175	— ·176
378					— ·249	P — ·244	— ·247
379					— ·215	P — ·197	— ·206
380	— ·148	— ·130	— ·176	— ·176			— ·157
381					— ·136	— ·131	— ·134
382					— ·150	— ·153	— ·152
383					— ·144	— ·156	— ·150
384					— ·154	— ·179	— ·167
385					— ·094	— ·126	— ·110
386					— ·165	— ·184	— ·175
387					— ·140	— ·148	— ·144
388					— ·157	— ·154	— ·156
389					— ·109	— ·124	— ·117
390							— ·105

Digitized by Google

The square of the *mean error* of a determination of division-error was computed by the usual formula

$$\epsilon^2 = \frac{[vv]}{n-1}$$

the mean value of ϵ^2, given in the following Table, depends on all the results of each group whether repeated on account of discordance or not. The results are given in groups according as the determinations of the same division were made by the same observer or by different observers.

		Mean value of ϵ^2.	No. of Results.
Gill and Gill	From agreement of the 4 results for each tenth division	0·000208	128
Gill and Gill	From agreement of the 2 results in the determination of the single divisions	·000232	162
Gill and Pett	Do. do. do.	·000310	198
Gill and Finlay	Do. do. do.	·000302	18
Gill and Jacoby	Do. do. do.	·000304	36
Pett and Pett	Do. do. do.	·000312	36
Pett and Jacoby	Do. do. do.	·000438	18

Since there are 4 determinations of each principal division, and the errors are non-cumulative, the resulting probable error of the determination of each principal division is

$$\pm 0''\cdot 0048$$

The determination of the sub-divisions of the 10 division spaces depend, as a rule, upon two determinations each, the corresponding probable error of the mean will be accordingly

	Probable Error.
For observations Gill and Gill	$\pm 0''\cdot 0072$
Pett and Pett	$\pm$ ·0083
Gill and Pett	$\pm$ ·0083
Gill and Finlay	$\pm$ ·0082
Gill and Jacoby	$\pm$ ·0082
Pett and Jacoby	$\pm$ ·0099

Digitized by Google

Mr. Jacoby only observed one set (270–280 compared with 230–240) the observations being a repetition by him and Mr. Pett in consequence of an extreme discordance between the two results obtained by Gill for the division-error of the line 278, viz.,

$$-0''\cdot023 \text{ and} -0''\cdot116$$

The results by Jacoby and Pett, however, viz.,

$$-0''\cdot047 \text{ and} -0''\cdot077$$

almost exactly agree with the mean of Gill's, the two means being

$$-0''\cdot068 \text{ and} -0''\cdot062$$

There is, therefore, no reason for including the value of ϵ^2 for Pett and Jacoby in estimating the probable error, and seeing that all the more discordant series have been repeated (and it is these which chiefly tend to raise the value of ϵ^2) we are not underestimating ϵ^2 in the sub-division of the 10-division spaces if we put

$$\epsilon^2 = 0\cdot000280$$

We have then for any division that is not one of the principal divisions, the combined uncertainty due both to the determination of the 10-division lines and to that of the single divisions, that is

$$\text{The probable error of any division other than the fundamental 10th division is - - - -} \Bigg\} = 0\cdot6745\sqrt{\frac{0\cdot000208}{4}+\frac{0\cdot000280}{2}} = \pm0''\cdot0092$$

The correction for division-error on the double distance involves the effect of the errors of 4 divisions

$$= \sqrt{4(0\cdot0092)^2},$$

and hence on the single distance the probable error due to division-error is

$$\pm0''\cdot0092$$

The rather larger probable errors of the other observers than Gill may be in part due to less familiarity with the instrument, but probably more to the fact that their observations have chiefly been compared with those of Gill where that observer's results were most discordant. Even if this explanation be disregarded, the remarkable fact remains that under no hypothesis is the probable error increased by $\pm0''\cdot007$ on account of personality on part of different observers. There can be no higher testimony than this to the exquisite character of the graduation.

Digitized by Google

COMPUTATION OF THE CAPE INSTRUMENTAL DISTANCES.

It is desirable to provide simple and ready means for reducing the Heliometer readings to seconds of arc, including the corrections for division-error, run, etc.

With the Cape Heliometer the observers have always followed the rule to bisect the division of scale A with the so-called "fixed webs," and the division of scale B with the webs moved by the micrometer screw; that is (by a motion of the screw which moves the whole micrometer box) the observer places the "fixed parallel webs" symmetrical with one of the divisions of scale A, and then moves the micrometer screw till the "movable parallel webs" are symmetrical with the image of the adjacent division of scale B.

Let it be assumed that when the optical centres of the segments of the object-glass are in coincidence the scale readings are

$$\begin{aligned} &\text{For scale A} = 100 \\ &\quad\text{,,}\quad\text{,,}\quad \text{B} = 300+i \end{aligned}$$

that the reading of the micrometer screw when the movable wires are in coincidence with the fixed wires is m, that the readings of scale A in the two positions of the segments when measuring the same distance (S) are a_1 and a_2, and those of scale B are b_1 and b_2; further let Δa_1, Δa_2 be the division-errors (expressed in terms of revolutions of the micrometer screw) applicable to the readings a_1 and a_2, and Δb_1, Δb_2, the corresponding corrections to b_1 and b_2, M_1 and M_2 the micrometer readings on b_1 and b_2, Δr the correction for run per revolution of the screw, and ΔM_1, ΔM_2 the screw corrections corresponding to the screw readings M_1 and M_2; then, since 1 division-space is $=4$ normal screw revolutions, we have

$$S = \left\{ \begin{array}{l} 4(a_1-100)+\Delta a_1 \\ +4(300+i-b_1)-\{M_1-m+\Delta r(M_1-m)\}-\Delta b_1 \end{array} \right.$$

$$S = \left\{ \begin{array}{l} 4(100-a_2)-\Delta a_2 \\ +4\{b_2-(300+i)\}+\{M_2-m+\Delta r(M_2-m\}+\Delta b_2 \end{array} \right.$$

From which i and m disappear in the mean, and we have

$$S = \left\{ \begin{array}{ll} \left. \begin{array}{l} 2(a_1-b_1)+2(b_2-a_2) \\ +\frac{1}{2}(\Delta a_1-\Delta b_1)+\frac{1}{2}(\Delta b_2-\Delta a_2) \end{array} \right\} & \text{See afterwards Table A.} \\ +\frac{1}{2}(M_2-M_1) \quad \} & \text{,, ,, ,, B.} \\ +\frac{1}{2}\Delta r(M_2-M_1) \quad \} & \text{,, ,, ,, C.} \\ +\frac{1}{2}(\Delta M_2-\Delta M_1) \quad \} & \text{,, ,, ,, D.} \end{array} \right.$$

Digitized by Google

In the Cape Heliometer the micrometer box to which the "fixed wires" are attached has a range of motion equivalent to two divisions of the scale, and it has been the practice always to point the micrometer webs on the division of scale B next to the fixed web towards the side of the micrometer head. Thus, for any given reading of scale A only one of three divisions of scale B can be read, and this plan greatly simplifies the construction of reduction-tables.

Table A gives the equivalents of

$$2(a_1-b_1)+\tfrac{1}{2}(\Delta a_1-\Delta b_1)$$

for each possible combination of a_1 and b_1 and of

$$2(b_2-a_2)+\tfrac{1}{2}(\Delta b_2-\Delta a_2)$$

for each possible combination of a_2 and b_2 in a form very convenient in use. The adopted mean value of 1 revolution of the screw is $10''{\cdot}0238$.

Table B gives the equivalents of $\frac{1}{2}(M_2-M_1)$.

Note.—The simple rule to distinguish between M_2 and M_1 is to designate the micrometer reading + when the reading of scale A is less than 100, and − when greater than 100. The *algebraic sum* of the two readings when thus designated is $=(M_2-M_1)$.

Table C gives at sight the correction for Run $=\frac{1}{2}\Delta r(M_2-M_1)$. As the "Runs" at the Cape have been always determined by the measurement of a space = (4 Revns. + corr. for division-error), one argument of the Table is the correction required on account of run (expressed in $\frac{1}{10000}$ parts of a revolution) over one normal space of the scales. The quantities of Table C are therefore $=\frac{1}{8}(M_2-M_1)$ converted into seconds of arc.

Note.—The micrometer microscope has been adjusted so that the correction for Run is always *positive*, and therefore the correction to the measured distance has always the same sign as (M_2-M_1).

Table D gives the corrections for screw-error in seconds of arc with the argument M_1 or M_2; the required correction is $(\Delta M_2-\Delta M_1)$.

Note.—When the reading of scale A is greater than 100 the sign of the corresponding tabular correction ΔM is to be changed, the other tabular value of ΔM remaining unchanged. The algebraic sum of the two corrections is then the correction applicable on account of screw-error.

Digitized by Google

Take as an example the first observation of distance of Victoria, which is entered in the Journal as follows—

1889. June 10	Time by Chronometer. h m s	Scales. A B	Micrometer. r	Micrometer Means.
Observer.—Gill - -	22 8 22	128 271	4·846	−4·908*
	10 59		·970	
	13 42	71 329	3·617	+3·560
	17 6		·502	
Run (over 4 Revs.) +15·4				
			Sum=(M₂−M₁)=	−1·348

The reduction is then very simply effected as follows—

Arguments.

Scale readings	128 271	Table A	Equivalent	1142″·788
	71 329	„ „	„	1162″·688
	(M₂−M₁)−1r·348	„ B	„	−6″·755
Run and (M₂−M₁)15·4 and	−6″·7	„ C	„	− ·025
			Sum = S =	2298″·696

If it be desired to apply the corrections for screw-error from Table D we have

$$-0''\cdot002+0''\cdot002=\cdot000$$

Throughout the planetary observations no corrections for screw-error have been applied, because they are generally insensible, (they can only, at the maximum, affect the distance by 0″·011) and as the distance of the planet is continually changing they are completely eliminated in the mean of a few observations.

* The signs of the micrometer means are determined by the rule given for use of Table B, viz., that when the reading of scale A is greater than 100 the corresponding micrometer readings are to be designated negative. The algebraic sum of the micrometer means is then the true value of (M₂−M₁).

Digitized by Google

TABLES FOR CONVERTING CAPE HELIOMETER READINGS INTO ARC.

TABLE A.

Note.—The sign + or — at the top of the columns of this Table is the sign of the micrometer equivalent which is to be taken from Table B.

Scale.		+	Scale.		−	Scale.		+	Scale.		−
A.	B.		A.	B.		A.	B.		A.	B.	
8	391	3668″658	192	207	3708″859	21	378	3147″306	179	220	3187″562
8	392	3688·705	192	208	3688·811	21	379	3167·375	179	221	3167·491
8	393	3708·753	192	209	3668·764	21	380	3187·446	179	222	3147·475
9	390	3628·563	191	208	3668·764	22	377	3107·268	178	221	3147·434
9	391	3648·610	191	209	3648·716	22	378	3127·280	178	222	3127·419
9	392	3668·658	191	210	3628·669	22	379	3147·348	178	223	3107·349
10	389	3588·461	190	209	3628·668	23	376	3067·210	177	222	3107·394
10	390	3608·515	190	210	3608·621	23	377	3087·229	177	223	3087·324
10	391	3628·552	190	211	3588·559	23	378	3107·241	177	224	3067·295
11	388	3548·333	189	210	3588·558	24	375	3027·083	176	223	3067·295
11	389	3568·400	189	211	3568·497	24	376	3047·152	176	224	3047·265
11	390	3588·453	189	212	3548·446	24	377	3067·172	176	225	3027·239
12	387	3508·251	188	211	3548·442	25	374	2986·999	175	224	3027·196
12	388	3528·293	188	212	3528·392	25	375	3007·050	175	225	3007·169
12	389	3548·359	188	213	3508·371	25	376	3027·120	175	226	2987·091
13	386	3468·157	187	212	3508·365	26	373	2946·859	174	225	2987·144
13	387	3488·220	187	213	3488·344	26	374	2966·902	174	226	2967·067
13	388	3508·262	187	214	3468·288	26	375	2986·952	174	227	2946·991
14	385	3428·092	186	213	3468·267	27	372	2906·771	173	226	2946·997
14	386	3448·106	186	214	3448·210	27	373	2926·812	173	227	2926·922
14	387	3468·170	186	215	3428·154	27	374	2946·854	173	228	2906·887
15	384	3387·943	185	214	3428·187	28	371	2866·675	172	227	2906·884
15	385	3408·020	185	215	3408·130	28	372	2886·729	172	228	2886·849
15	386	3428·035	185	216	3388·083	28	373	2906·770	172	229	2866·772
16	383	3347·845	184	215	3388·056	29	370	2826·542	171	228	2866·760
16	384	3367·884	184	216	3368·010	29	371	2846·598	171	229	2846·682
16	385	3387·960	184	217	3347·937	29	372	2866·652	171	230	2826·670
17	382	3307·726	183	216	3347·980	30	369	2786·489	170	229	2826·678
17	383	3327·775	183	217	3327·908	30	370	2806·533	170	230	2806·665
17	384	3347·813	183	218	3307·873	30	371	2826·590	170	231	2786·599
18	381	3267·677	182	217	3307·830	31	368	2746·344	169	230	2786·612
18	382	3287·715	182	218	3287·795	31	369	2766·386	169	231	2766·547
18	383	3307·764	182	219	3267·750	31	370	2786·429	169	232	2746·509
19	380	3227·568	181	218	3267·784	32	367	2706·304	168	231	2746·505
19	381	3247·627	181	219	3247·738	32	368	2726·331	168	232	2726·468
19	382	3267·666	181	220	3227·697	32	369	2746·372	168	233	2706·413
20	379	3187·431	180	219	3227·675	33	366	2666·186	167	232	2706·445
20	380	3207·503	180	220	3207·633	33	367	2686·227	167	233	2686·390
20	381	3227·563	180	221	3187·561	33	368	2706·254	167	234	2666·330

Digitized by Google

TABLE A—*continued.*

Scale.		+	Scale.		−	Scale.		+	Scale.		−
A.	B.		A.	B.		A.	B.		A.	B.	
34	365	2626″075	166	233	2666″346	48	351	2064″802	152	247	2104″993
34	366	2646·151	166	234	2646·285	48	352	2084·896	152	248	2084·965
34	367	2666·193	166	235	2626·247	48	353	2104·929	152	249	2064·906
35	364	2585·972	165	234	2626·208	49	350	2024·690	151	248	2064·873
35	365	2606·025	165	235	2606·169	49	351	2044·739	151	249	2044·813
35	366	2626·102	165	236	2586·125	49	352	2064·834	151	250	2024·803
36	363	2545·873	164	235	2586·128	50	349	1984·626	150	249	2024·810
36	364	2565·905	164	236	2566·085	50	350	2004·650	150	250	2004·799
36	365	2585·957	164	237	2546·047	50	351	2024·700	150	251	1984·730
37	362	2505·835	163	236	2546·038	51	348	1944·508	149	250	1984·760
37	363	2525·847	163	237	2526·001	51	349	1964·576	149	251	1964·692
37	364	2545·878	163	238	2505·935	51	350	1984·599	149	252	1944·674
38	361	2465·734	162	237	2505·979	52	347	1904·457	148	251	1944·617
38	362	2485·796	162	238	2485·913	52	348	1924·486	148	252	1924·600
38	363	2505·808	162	239	2465·864	52	349	1944·553	148	253	1904·563
39	360	2425·606	161	238	2465·857	53	346	1864·341	147	252	1904·566
39	361	2445·653	161	239	2445·807	53	347	1884·422	147	253	1884·529
39	362	2465·716	161	240	2425·745	53	348	1904·451	147	254	1864·486
40	359	2385·497	160	239	2425·748	54	345	1824·240	146	253	1864·475
40	360	2405·544	160	240	2405·685	54	346	1844·282	146	254	1844·431
40	361	2425·592	160	241	2385·650	54	347	1864·364	146	255	1824·399
41	358	2345·419	159	240	2385·614	55	344	1784·166	145	254	1824·373
41	359	2365·457	159	241	2365·580	55	345	1804·209	145	255	1804·340
41	360	2385·503	159	242	2345·560	55	346	1824·252	145	256	1784·303
42	357	2305·397	158	241	2345·556	56	343	1744·068	144	255	1784·300
42	358	2325·432	158	242	2325·537	56	344	1764·115	144	256	1764·264
42	359	2345·469	158	243	2305·459	56	345	1784·157	144	257	1744·233
43	356	2265·240	157	242	2305·499	57	342	1703·955	143	256	1744·229
43	357	2285·303	157	243	2285·421	57	343	1724·041	143	257	1724·199
43	358	2305·338	157	244	2265·376	57	344	1744·087	143	258	1704·137
44	355	2225·161	156	243	2265·376	58	341	1663·845	142	257	1704·132
44	356	2245·203	156	244	2245·330	58	342	1683·894	142	258	1684·070
44	357	2265·267	156	245	2225·285	58	343	1703·980	142	259	1664·038
45	354	2185·057	155	244	2225·252	59	340	1623·761	141	258	1664·015
45	355	2205·109	155	245	2205·206	59	341	1643·815	141	259	1643·982
45	356	2225·152	155	246	2185·167	59	342	1663·865	141	260	1623·942
46	353	2145·002	154	245	2185·176	60	339	1583·701	140	259	1623·903
46	354	2165·013	154	246	2165·138	60	340	1603·700	140	260	1603·862
46	355	2185·064	154	247	2145·079	60	341	1623·755	140	261	1583·817
47	352	2104·901	153	246	2145·112	61	338	1543·608	139	260	1583·861
47	353	2124·934	153	247	2125·054	61	339	1563·664	139	261	1563·816
47	354	2144·944	153	248	2105·026	61	340	1583·662	139	262	1543·748

Digitized by Google

TABLE A—*continued.*

Scale.		+	Scale.		−	Scale.		+	Scale.		−
A.	B.		A.	B.		A.	B.		A.	B.	
62	337	1503″.471	138	261	1543″.764	76	323	942″.156	124	275	982″.313
62	338	1523.536	138	262	1523.696	76	324	962.167	124	276	962.311
62	339	1543.591	138	263	1503.630	76	325	982.213	124	277	942.249
63	336	1463.355	137	262	1503.636	77	322	902.027	123	276	942.300
63	337	1483.414	137	263	1483.570	77	323	922.082	123	277	922.239
63	338	1503.479	137	264	1463.542	77	324	942.092	123	278	902.203
64	335	1423.303	136	263	1463.537	78	321	861.906	122	277	902.186
64	336	1443.326	136	264	1443.508	78	322	881.978	122	278	882.150
64	337	1463.386	136	265	1423.445	78	323	902.033	122	279	862.113
65	334	1383.186	135	264	1423.441	79	320	821.832	121	278	862.087
65	335	1403.236	135	265	1403.377	79	321	841.873	121	279	842.049
65	336	1423.260	135	266	1383.334	79	322	861.946	121	280	821.948
66	333	1343.079	134	265	1383.325	80	319	781.674	120	279	822.013
66	334	1363.144	134	266	1363.283	80	320	801.739	120	280	801.911
66	335	1383.193	134	267	1343.214	80	321	821.781	120	281	781.873
67	332	1302.977	133	266	1343.248	81	318	741.642	119	280	781.830
67	333	1323.019	133	267	1323.180	81	319	761.635	119	281	761.793
67	334	1343.083	133	268	1303.155	81	320	781.699	119	282	741.794
68	331	1262.881	132	267	1303.137	82	317	701.559	118	281	741.830
68	332	1282.955	132	268	1283.112	82	318	721.647	118	282	721.832
68	333	1302.997	132	269	1263.038	82	319	741.639	118	283	701.742
69	330	1222.776	131	268	1263.037	83	316	661.404	117	282	701.738
69	331	1242.813	131	269	1242.962	83	317	681.469	117	283	681.648
69	332	1262.888	131	270	1222.931	83	318	701.557	117	284	661.613
70	329	1182.726	130	269	1222.905	84	315	621.353	116	283	661.565
70	330	1202.740	130	270	1202.873	84	316	641.371	116	284	641.529
70	331	1222.778	130	271	1182.839	84	317	661.437	116	285	621.501
71	328	1142.628	129	270	1182.865	85	314	581.258	115	284	621.508
71	329	1162.688	129	271	1162.832	85	315	601.322	115	285	601.479
71	330	1182.701	129	272	1142.775	85	316	621.341	115	286	581.404
72	327	1102.544	128	271	1142.788	86	313	541.137	114	285	581.438
72	328	1122.578	128	272	1122.732	86	314	561.194	114	286	561.364
72	329	1142.637	128	273	1102.677	86	315	581.257	114	287	541.365
73	326	1062.413	127	272	1102.667	87	312	501.068	113	286	541.279
73	327	1082.465	127	273	1082.612	87	313	521.128	113	287	521.281
73	328	1102.499	127	274	1062.567	87	314	541.184	113	288	501.221
74	325	1022.292	126	273	1062.580	88	311	460.960	112	287	501.259
74	326	1042.367	126	274	1042.534	88	312	481.021	112	288	481.199
74	327	1062.420	126	275	1022.447	88	313	501.081	112	289	461.181
75	324	982.169	125	274	1022.456	89	310	420.921	111	288	461.135
75	325	1002.216	125	275	1002.368	89	311	440.934	111	289	441.116
75	326	1022.292	125	276	982.365	89	312	460.996	111	290	421.046

Digitized by Google

TABLE A—*continued.*

Scale.		+	Scale.		−	Scale.		+	Scale.		−
A.	B.		A.	B.		A.	B.		A.	B.	
90	309	380″834	110	289	421″094	96	303	140″251	104	295	180″504
90	310	400·852	110	290	401·023	96	304	160·321	104	296	160·468
90	311	420·866	110	291	380·973	96	305	180·374	104	297	140·422
91	308	340·728	109	290	381·006	97	302	100·159	103	296	140·416
91	309	360·807	109	291	360·957	97	303	120·187	103	297	120·371
91	310	380·824	109	292	340·887	97	304	140·256	103	298	100·293
92	307	300·612	108	291	340·880	98	301	60·024	102	297	100·338
92	308	320·672	108	292	320·810	98	302	80·086	102	298	80·260
92	309	340·750	108	293	300·774	98	303	100·114	102	299	60·261
93	306	260·500	107	292	300·760	99	300	19·984	101	298	60·229
93	307	280·552	107	293	280·724	99	301	40·032	101	299	40·229
93	308	300·612	107	294	260·663	99	302	60·095	101	300	20·169
94	305	220·453	106	293	260·686	100	299	−20·150	100	299	+20·150
94	306	240·454	106	294	240·624	100	300	− 0·089	100	300	+ 0·089
94	307	260·507	106	295	220·600	100	301	+19·960	100	301	−19·960
95	304	180·342	105	294	220·606						
95	305	200·396	105	295	200·581						
95	306	220·398	105	296	180·544						

Digitized by Google

TABLES FOR CONVERTING THE CAPE HELIOMETER READINGS INTO ARC.

TABLE B.

$\frac{1}{2}(M_2 - M_1)$.

R.	·00	·01	·02	·03	·04	·05	·06	·07	·08	·09	R.
	″	″	″	″	″	″	″	″	″	″	
0·0	...	0·050	0·100	0·150	0·200	0·251	0·301	0·351	0·401	0·451	
·1	0·501	0·551	0·601	0·651	0·701	0·752	0·802	0·852	0·902	0·952	
·2	1·002	1·052	1·102	1·152	1·202	1·253	1·303	1·353	1·403	1·453	
·3	1·504	1·554	1·604	1·654	1·704	1·755	1·805	1·855	1·905	1·955	
·4	2·005	2·055	2·105	2·155	2·205	2·256	2·306	2·356	2·406	2·456	
0·5	2·506	2·556	2·606	2·656	2·706	2·757	2·807	2·857	2·907	2·957	
·6	3·007	3·057	3·107	3·157	3·207	3·258	3·308	3·358	3·408	3·458	
·7	3·508	3·558	3·608	3·658	3·708	3·759	3·809	3·859	3·909	3·959	
·8	4·010	4·060	4·110	4·160	4·210	4·261	4·311	4·361	4·411	4·461	
·9	4·511	4·561	4·611	4·661	4·711	4·762	4·812	4·862	4·912	4·962	
1·0	5·012	5·062	5·112	5·162	5·212	5·263	5·313	5·363	5·413	5·463	R ″ 0·001 = ·005
·1	5·513	5·563	5·613	5·663	5·713	5·764	5·814	5·864	5·914	5·964	·002 = ·010
·2	6·014	6·064	6·114	6·164	6·214	6·265	6·315	6·365	6·415	6·465	·003 = ·015
·3	6·515	6·565	6·615	6·665	6·715	6·766	6·816	6·866	6·916	6·966	·004 = ·020
·4	7·017	7·067	7·117	7·167	7·217	7·268	7·318	7·368	7·418	7·468	·005 = ·025
											·006 = ·030
1·5	7·518	7·568	7·618	7·668	7·718	7·769	7·819	7·869	7·919	7·969	·007 = ·035
·6	8·019	8·069	8·119	8·169	8·219	8·270	8·320	8·370	8·420	8·470	·008 = ·040
·7	8·520	8·570	8·620	8·670	8·720	8·771	8·821	8·871	8·921	8·971	·009 = ·045
·8	9·021	9·071	9·121	9·171	9·221	9·272	9·322	9·372	9·422	9·472	
·9	9·523	9·573	9·623	9·673	9·723	9·774	9·824	9·874	9·924	9·974	
2·0	10·024	10·074	10·124	10·174	10·224	10·275	10·325	10·375	10·425	10·475	
·1	10·525	10·575	10·625	10·675	10·725	10·776	10·826	10·876	10·926	10·976	
·2	11·026	11·076	11·126	11·176	11·226	11·277	11·327	11·377	11·427	11·477	
·3	11·527	11·577	11·627	11·677	11·727	11·778	11·828	11·878	11·928	11·978	
·4	12·029	12·079	12·129	12·179	12·229	12·280	12·330	12·380	12·430	12·480	
2·5	12·530	12·580	12·630	12·680	12·730	12·781	12·831	12·881	12·931	12·981	
·6	13·031	13·081	13·131	13·181	13·231	13·282	13·332	13·382	13·432	13·482	
·7	13·532	13·582	13·632	13·682	13·732	13·783	13·833	13·883	13·933	13·983	
·8	14·033	14·083	14·133	14·183	14·233	14·284	14·334	14·384	14·434	14·484	
·9	14·535	14·585	14·635	14·685	14·735	14·786	14·836	14·886	14·936	14·986	
3·0	15·036	15·086	15·136	15·186	15·236	15·287	15·337	15·387	15·437	15·487	
·1	15·537	15·587	15·637	15·687	15·737	15·788	15·838	15·888	15·938	15·988	
·2	16·038	16·088	16·138	16·188	16·238	16·289	16·339	16·389	16·439	16·489	
·3	16·539	16·589	16·639	16·689	16·739	16·790	16·840	16·890	16·940	16·990	
·4	17·040	17·090	17·140	17·190	17·240	17·291	17·341	17·391	17·441	17·491	
	·00	·01	·02	·03	·04	·05	·06	·07	·08	·09	

Digitized by Google

TABLE B.—*continued.*

R.	·00	·01	·02	·03	·04	·05	·06	·07	·08	·09	R.
	″	″	″	″	″	″	″	″	″	″	
3·5	17·542	17·592	17·642	17·692	17·742	17·793	17·843	17·893	17·943	17·993	
·6	18·043	18·093	18·143	18·193	18·243	18·294	18·344	18·394	18·444	18·494	
·7	18·544	18·594	18·644	18·694	18·744	18·795	18·845	18·895	18·945	18·995	
·8	19·045	19·095	19·145	19·195	19·245	19·296	19·346	19·396	19·446	19·496	
·9	19·546	19·596	19·646	19·696	19·746	19·797	19·847	19·897	19·947	19·997	
4·0	20·048	20·098	20·148	20·198	20·248	20·299	20·349	20·399	20·449	20·499	
·1	20·549	20·599	20·649	20·699	20·749	20·800	20·850	20·900	20·950	21·000	
·2	21·050	21·100	21·150	21·200	21·250	21·301	21·351	21·401	21·451	21·501	
·3	21·551	21·601	21·651	21·701	21·751	21·802	21·852	21·902	21·952	22·002	
·4	22·052	22·102	22·152	22·202	22·252	22·303	22·353	22·403	22·453	22·503	
4·5	22·554	22·604	22·654	22·704	22·754	22·805	22·855	22·905	22·955	23·005	
·6	23·055	23·105	23·155	23·205	23·255	23·306	23·356	23·406	23·456	23·506	
·7	23·556	23·606	23·656	23·706	23·756	23·807	23·857	23·907	23·957	24·007	
·8	24·057	24·107	24·157	24·207	24·257	24·308	24·358	24·408	24·458	24·508	
·9	24·559	24·609	24·659	24·709	24·759	24·810	24·860	24·910	24·960	25·010	R ″ 0·001 = ·005
5·0	25·060	25·110	25·160	25·210	25·260	25·311	25·361	25·411	25·461	25·511	·002 = ·010
·1	25·561	25·611	25·661	25·711	25·761	25·812	25·862	25·912	25·962	26·012	·003 = ·015
·2	26·062	26·112	26·162	26·212	26·262	26·313	26·363	26·413	26·463	26·513	·004 = ·020
·3	26·563	26·613	26·663	26·713	26·763	26·814	26·864	26·914	26·964	27·014	·005 = ·025
·4	27·064	27·114	27·164	27·214	27·264	27·315	27·365	27·415	27·465	27·515	·006 = ·030 ·007 = ·035
5·5	27·565	27·615	27·665	27·715	27·765	27·816	27·866	27·916	27·966	28·016	·008 = ·040
·6	28·067	28·117	28·167	28·217	28·267	28·318	28·368	28·418	28·468	28·518	·009 = ·045
·7	28·568	28·618	28·668	28·718	28·768	28·819	28·869	28·919	28·969	29·019	
·8	29·069	29·119	29·169	29·219	29·269	29·320	29·370	29·420	29·470	29·520	
·9	29·570	29·620	29·670	29·720	29·770	29·821	29·871	29·921	29·971	30·021	
6·0	30·071	30·121	30·171	30·221	30·271	30·322	30·372	30·422	30·472	30·522	
·1	30·573	30·623	30·673	30·723	30·773	30·824	30·874	30·924	30·974	31·024	
·2	31·074	31·124	31·174	31·224	31·274	31·325	31·375	31·425	31·475	31·525	
·3	31·575	31·625	31·675	31·725	31·775	31·826	31·876	31·926	31·976	32·026	
·4	32·076	32·126	32·176	32·226	32·276	32·327	32·377	32·427	32·477	32·527	
6·5	32·577	32·627	32·677	32·727	32·777	32·828	32·878	32·928	32·978	33·028	
·6	33·079	33·129	33·179	33·229	33·279	33·330	33·380	33·430	33·480	33·530	
·7	33·580	33·630	33·680	33·730	33·780	33·831	33·881	33·931	33·981	34·031	
·8	34·081	34·131	34·181	34·231	34·281	34·332	34·382	34·432	34·482	34·532	
·9	34·582	34·632	34·682	34·732	34·782	34·833	34·883	34·933	34·983	35·033	
7·0	35·083	35·133	35·183	35·233	35·283	35·334	35·384	35·434	35·484	35·534	
·1	35·584	35·634	35·684	35·734	35·784	35·835	35·885	35·935	35·985	36·035	
·2	36·086	36·136	36·186	36·236	36·286	36·337	36·387	36·437	36·487	36·537	
·3	36·587	36·637	36·687	36·737	36·787	36·838	36·888	36·938	36·988	37·038	
·4	37·088	37·138	37·188	37·238	37·288	37·339	37·389	37·439	37·489	37·539	
	·00	·01	·02	·03	·04	·05	·06	·07	·08	·09	

Digitized by Google

TABLES FOR CONVERTING CAPE

TABLE C.—Correction

Argument.—Run expressed in $\frac{1}{1000}$ parts of a screw

Arg.		1	2	3	4	5	6	7	8	9	10	11	12	13	14	15	Diff.
r	″	″	″	″	″	″	″	″	″	″	″	″	″	″	″	″	
0·0	0·0	·000	·000	·000	·000	·000	·000	·000	·000	·000	·000	·000	·000	·000	·000	·000	
·2	1·0	·000	·001	·001	·001	·001	·002	·002	·002	·002	·003	·003	·003	·003	·004	·004	
·4	2·0	·001	·001	·002	·002	·003	·003	·004	·004	·005	·005	·006	·006	·007	·007	·008	
·6	3·0	·001	·002	·002	·003	·004	·005	·005	·006	·007	·008	·008	·009	·010	·011	·011	
·8	4·0	·001	·002	·003	·004	·005	·006	·007	·008	·009	·010	·011	·012	·013	·014	·015	1
1·0	5·0	·001	·003	·004	·005	·006	·008	·009	·010	·011	·013	·014	·015	·016	·018	·019	
·2	6·0	·002	·003	·005	·006	·008	·009	·011	·012	·014	·015	·017	·018	·020	·021	·022	
·4	7·0	·002	·004	·005	·007	·009	·011	·012	·014	·016	·018	·019	·021	·023	·025	·026	
·6	8·0	·002	·004	·006	·008	·010	·012	·014	·016	·018	·020	·022	·024	·026	·028	·030	2
·8	9·0	·002	·005	·007	·009	·011	·014	·016	·018	·020	·023	·025	·027	·029	·032	·034	
2·0	10·0	·003	·005	·008	·010	·013	·015	·018	·020	·023	·025	·028	·030	·033	·035	·038	
·2	11·0	·003	·006	·008	·011	·014	·017	·019	·022	·025	·028	·030	·033	·036	·039	·041	
·4	12·0	·003	·006	·009	·012	·015	·018	·021	·024	·027	·030	·033	·036	·039	·042	·045	3
·6	13·0	·003	·007	·010	·013	·016	·020	·023	·026	·029	·033	·036	·039	·042	·046	·049	
·8	14·0	·004	·007	·011	·014	·018	·021	·025	·028	·032	·035	·039	·042	·046	·049	·053	
3·0	15·0	·004	·008	·011	·015	·019	·023	·026	·030	·034	·038	·041	·045	·049	·053	·056	
·2	16·0	·004	·008	·012	·016	·020	·024	·028	·032	·036	·040	·044	·048	·052	·056	·060	4
·4	17·0	·004	·009	·013	·017	·021	·026	·030	·034	·038	·043	·047	·051	·055	·060	·064	
·6	18·0	·005	·009	·014	·018	·023	·027	·032	·036	·041	·045	·050	·054	·059	·063	·068	
·8	19·0	·005	·010	·014	·019	·024	·029	·033	·038	·043	·048	·052	·057	·062	·067	·071	
4·0	20·0	·005	·010	·015	·020	·025	·030	·035	·040	·045	·050	·055	·060	·065	·070	·075	5
·2	21·0	·005	·011	·016	·021	·026	·032	·037	·042	·047	·053	·058	·063	·068	·074	·079	
·4	22·0	·006	·011	·017	·022	·028	·033	·039	·044	·050	·055	·061	·066	·072	·077	·083	
·6	23·0	·006	·012	·017	·023	·029	·035	·040	·046	·052	·058	·063	·069	·075	·081	·086	
·8	24·0	·006	·012	·018	·024	·030	·036	·042	·048	·054	·060	·066	·072	·078	·084	·090	6
5·0	25·0	·006	·013	·019	·025	·031	·038	·044	·050	·056	·063	·069	·075	·081	·088	·094	
·2	26·0	·007	·013	·020	·026	·033	·039	·046	·052	·059	·065	·072	·078	·085	·091	·098	
·4	27·0	·007	·014	·020	·027	·034	·041	·047	·054	·061	·068	·074	·081	·088	·095	·101	
·6	28·0	·007	·014	·021	·028	·035	·042	·049	·056	·063	·070	·077	·084	·091	·098	·105	7
·8	29·0	·007	·015	·022	·029	·036	·044	·051	·058	·065	·073	·080	·087	·094	·102	·109	
6·0	30·0	·008	·015	·023	·030	·038	·045	·053	·060	·068	·075	·083	·090	·098	·105	·113	
·2	31·0	·008	·016	·023	·031	·039	·047	·054	·062	·070	·078	·085	·093	·101	·109	·116	
·4	32·0	·008	·016	·024	·032	·040	·048	·056	·064	·072	·080	·088	·096	·104	·112	·120	8
·6	33·0	·008	·017	·025	·033	·041	·050	·058	·066	·074	·083	·091	·099	·107	·116	·124	
·8	34·0	·009	·017	·026	·034	·043	·051	·060	·068	·077	·085	·094	·102	·111	·119	·128	
7·0	35·0	·009	·018	·026	·035	·044	·053	·061	·070	·079	·088	·096	·105	·114	·123	·132	
·2	36·0	·009	·018	·027	·036	·045	·054	·063	·072	·081	·090	·099	·108	·117	·126	·135	9
·4	37·0	·009	·019	·028	·037	·046	·056	·065	·074	·083	·093	·102	·111	·121	·130	·139	
		1	2	3	4	5	6	7	8	9	10	11	12	13	14	15	

Digitized by Google

HELIOMETER READINGS INTO ARC.

for Run $= \frac{1}{2} \Delta r \cdot (M_2 - M_1)$.

revolution over 4 revolutions (= 1 division).

Arg.		16	17	18	19	20	21	22	23	24	25	26	27	28	29	30	Diff.
r	″	″	″	″	″	″	″	″	″	″	″	″	″	″	″	″	
0·0	0″0	·000	·000	·000	·000	·000	·000	·000	·000	·000	·000	·000	·000	·000	·000	·000	
·2	1·0	·004	·004	·005	·005	·005	·005	·006	·006	·006	·006	·007	·007	·007	·007	·008	
·4	2·0	·008	·009	·009	·010	·010	·011	·011	·012	·012	·013	·013	·014	·014	·015	·015	
·6	3·0	·012	·013	·014	·014	·015	·016	·017	·017	·018	·019	·020	·020	·021	·022	·023	
·8	4·0	·016	·017	·018	·019	·020	·021	·022	·023	·024	·025	·026	·027	·028	·029	·030	1
1·0	5·0	·020	·021	·023	·024	·025	·026	·028	·029	·030	·031	·032	·034	·035	·036	·037	
·2	6·0	·024	·026	·027	·029	·030	·032	·033	·035	·036	·038	·039	·041	·042	·044	·045	
·4	7·0	·028	·030	·032	·033	·035	·037	·039	·040	·042	·044	·046	·047	·049	·051	·053	
·6	8·0	·032	·034	·036	·038	·040	·042	·044	·046	·048	·050	·052	·054	·056	·058	·060	2
·8	9·0	·036	·038	·041	·043	·045	·047	·050	·052	·054	·056	·059	·061	·063	·065	·068	
2·0	10·0	·040	·043	·045	·048	·050	·053	·055	·058	·060	·063	·065	·068	·070	·073	·075	
·2	11·0	·044	·047	·050	·052	·055	·058	·061	·063	·066	·069	·072	·074	·077	·080	·083	
·4	12·0	·048	·051	·054	·057	·060	·063	·066	·069	·072	·075	·078	·081	·084	·087	·090	3
·6	13·0	·052	·055	·059	·062	·065	·068	·072	·075	·078	·081	·085	·088	·091	·094	·098	
·8	14·0	·056	·060	·063	·067	·070	·074	·077	·081	·084	·088	·091	·095	·098	·102	·105	
3·0	15·0	·060	·064	·068	·071	·075	·079	·083	·086	·090	·094	·098	·101	·105	·109	·113	
·2	16·0	·064	·068	·072	·076	·080	·084	·088	·092	·096	·100	·104	·108	·112	·116	·120	4
·4	17·0	·068	·072	·077	·081	·085	·089	·094	·098	·102	·106	·111	·115	·119	·124	·128	
·6	18·0	·072	·077	·081	·086	·090	·095	·099	·104	·108	·113	·117	·122	·126	·131	·135	
·8	19·0	·076	·081	·086	·090	·095	·100	·105	·109	·114	·119	·124	·129	·133	·138	·143	
4·0	20·0	·080	·085	·090	·095	·100	·105	·110	·115	·120	·125	·130	·135	·140	·145	·150	5
·2	21·0	·084	·089	·095	·100	·105	·110	·116	·121	·126	·132	·137	·142	·147	·153	·158	
·4	22·0	·088	·094	·099	·105	·110	·116	·121	·127	·132	·138	·143	·149	·154	·160	·165	
·6	23·0	·092	·098	·104	·109	·115	·121	·127	·132	·138	·144	·150	·155	·161	·167	·173	
·8	24·0	·096	·102	·108	·114	·120	·126	·132	·138	·144	·150	·156	·162	·168	·174	·180	6
5·0	25·0	·100	·106	·113	·119	·125	·131	·138	·144	·150	·157	·163	·169	·175	·182	·188	
·2	26·0	·104	·111	·117	·124	·130	·137	·143	·150	·156	·163	·169	·176	·182	·189	·195	
·4	27·0	·108	·115	·122	·128	·135	·142	·149	·155	·162	·169	·176	·182	·189	·196	·203	
·6	28·0	·112	·119	·126	·133	·140	·147	·154	·161	·168	·175	·182	·189	·196	·203	·210	7
·8	29·0	·116	·123	·131	·138	·145	·152	·160	·167	·174	·181	·189	·196	·203	·210	·218	
6·0	30·0	·120	·128	·135	·143	·150	·158	·165	·173	·180	·188	·195	·203	·210	·218	·225	
·2	31·0	·124	·132	·140	·147	·155	·163	·171	·179	·186	·194	·202	·210	·218	·225	·233	
·4	32·0	·128	·136	·144	·152	·160	·168	·176	·184	·192	·200	·208	·216	·224	·232	·240	8
·6	33·0	·132	·140	·149	·157	·165	·173	·182	·190	·198	·206	·215	·223	·231	·239	·248	
·8	34·0	·136	·145	·153	·162	·170	·179	·187	·196	·204	·213	·222	·230	·239	·247	·256	
7·0	35·0	·140	·149	·158	·167	·175	·184	·193	·202	·210	·219	·228	·237	·246	·254	·263	
·2	36·0	·144	·153	·162	·171	·180	·189	·198	·207	·216	·225	·234	·243	·252	·261	·270	9
·4	37·0	·148	·158	·167	·176	·185	·195	·204	·213	·223	·232	·241	·250	·260	·269	·278	
		16	17	18	19	20	21	22	23	24	25	26	27	28	29	30	

Digitized by Google

TABLES FOR CONVERTING CAPE HELIOMETER READINGS INTO ARC.

TABLE D.

CORRECTIONS APPLICABLE TO OBSERVED DISTANCES ON ACCOUNT OF PERIODIC ERRORS OF THE SCREW.

Arg.		Corr.
r 0·00	—	" 0·001
·05	—	·002
·10	—	·003
·15	—	·004
·20	—	·005
·25	—	·005
·30	—	·005
·35	—	·005
·40	—	·004
·45	—	·002
·50		·000
·55	+	·002
·60	+	·004
·65	+	·005
·70	+	·006
·75	+	·006
·80	+	·005
·85	+	·004
·90	+	·002
·95	+	·001

These corrections have been considered negligible in the reductions.

Digitized by Google

METHODS OF OBSERVATION.

Cape Observations.

The dome is always opened for some hours before commencing the evening observations.

When the planet reaches a sufficient altitude for observation, the observer compares his sidereal chronometer with the transit-clock and proceeds to the Heliometer Observatory. Having set the driving clock in motion, adjusted the distance-scales and position-circle, and clamped in declination and hour-angle to the previously computed readings, he finds the images of the planet and comparison star near each other in the field of view. He then adjusts the observing chair, and, if necessary, selects a suitable screen for equalizing the brightness of the images of the star and planet, takes the readings of the barometer and external thermometer, the latter readings being dictated to an assistant in the Observatory. Having turned the reversing-prism to make the apparent direction of measurement horizontal or vertical (Auwers always used the vertical, Gill the horizontal direction), he proceeds to make the images pass through each other by small alternate motions in position-angle, employing for this purpose one of the handles, 74, 79 or 80, according to the distance, meanwhile making small changes in the distance of the optical centres of the segments by the handle 30 till he estimates exact superposition of the images at the instant of "crossing through." At the same instant he presses the button (which is placed in the centre of handle 74) and gives the signal "stop" to the assistant, who notes the time, to the nearest second, by the sidereal chronometer. The button is in electric connection with a slow moving chronograph, which records the observer's signal (1).

(1) The slow moving chronograph is also in electric connection with a sidereal clock in the basement of the Observatory, which sends one signal each minute of time, except the 60th minute. These signals are recorded on the chronograph tape at intervals of 7 millimetres apart. The instant of a signal transmitted by the observer and recorded on the tape can thus be readily estimated to about $\frac{1}{20}$ of a minute of time. The slow moving chronograph was originally designed for recording the times of Heliometer observations for stellar parallax where an accuracy of $\frac{1}{10}$ of a minute of time is amply sufficient for the computation of the corrections for refraction. But the instrument has also been found a very useful adjunct in the planetary observations, and several mistakes of 1 minute, 10 seconds, and 30 seconds have been detected by its aid; the assistant's record of the "chronometer times" being always checked the following morning by the tape of the slow moving chronograph.

The advantage of this form of chronograph in stellar observations is that the observer has no need to write down any part of his work except the record of the meteorological instruments and the objects observed. He has only to attach a card to indicate the scale-divisions which he

Digitized by Google

Then by the screw which moves the micrometer-box, he points the "fixed wires" on the image of a convenient division of scale A, and by the micrometer-screw points the "movable wires" on the adjacent image of a division of scale B, dictates the scale-readings employed to his assistant and prints the screw-reading on the micrometer tape. He then rotates the reversing-prism 90° to the right (thereby reversing the images 180°) and makes another similar pointing in distance. Then he reverses the segments and the screen (the latter by handle 32), again rotates the reversing-prism 90°, and makes another pointing in a similar manner, and finally after again turning the prism makes a fourth and final pointing. Of course in connection with each of these pointings the time and micrometer-readings are recorded as above described. These operations complete the observation of a single distance of four pointings.

Turning now to the next comparison star he makes a similar series of pointings and time records. Then he reverses the position-circle and objective-screen, and repeats his observations in the reverse order. If circumstances permit, another similar series of observations is made, and in some cases even a third. At the conclusion of the observations the barometer and thermometer are again read, the runs are determined, and the chronometer is again compared with the transit-clock.

At the Cape the run of the micrometer was determined by measuring the distance of the interval 100–99. This space was selected not only because it is viewed near the centre of the microscope-field when the optical centres are coincident (which is convenient as the last operation, because the observer thus leaves the instrument in the position for attaching the cover that protects the object-glass from dust), but also because these divisions are remarkably sharp and well defined in their edges.

According to the Table of division-errors the interval 100–99 exceeds a normal scale interval by $+0^{r}\cdot0048$, and this has been confirmed by an independent comparison with a number of spaces on both scales.

---

intends to employ for each object to one of the plates 81 (which he can illuminate at will by means of the lamp that illuminates the position-circle microscopes), and to take care to point on these divisions in their proper order. The chronograph tape thus records the time of each pointing, the card gives the scale-divisions he employed, and the micrometer-tape gives a printed record of the readings of the micrometer. The tapes, containing the time and micrometer records, can then be pasted in the book containing the clean copy of his night's observations; they are thus preserved for future reference.

Digitized by Google

The process of determining run is as follows—

1. Observations for coincidence of fixed and movable webs.

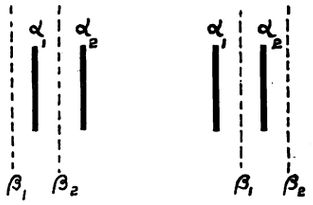

Let the solid lines a_1 and a_2 represent the fixed parallel webs, and the dotted lines β_1 and β_2 the parallel webs moved by the micrometer-screw. The observer first places β_2 in the middle of the space between the wires a_1 and a_2, and prints the reading of the micrometer-head; then the wire β_1 is similarly pointed midway between a_1 and a_2 and the reading is printed, then he repeats the same observations in the reverse order. The results give one determination for coincidence, a similar determination is made after the scale-pointings.

2. The observer points the fixed wires on division 100 by the screw which moves the whole micrometer-box, and, having done so, points the movable wires by the micrometer-screw upon the division 99 and prints the reading of the micrometer-head. This latter process is repeated from 6 to 10 times.

For example—Auwers determined run on 1889 June 22, as follows—

	100^d–99^d Coincidence.		Divn. 99.
1st Obs. for coincidence	$1^r \cdot 590$	$1^r \cdot 730$	$5^r \cdot 648$
	$\cdot 588$	$\cdot 727$	$\cdot 650$
			$\cdot 649$
			$\cdot 649$
2nd Obs. for coincidence	$1^r \cdot 589$	$1^r \cdot 731$	$\cdot 654$
	$\cdot 588$	$\cdot 730$	$\cdot 646$
	$1^r \cdot 5887$	$1^r \cdot 7295$	$5^r \cdot 6493$
Mean = Reading on 100^d =			$1 \cdot 6591$
Apparent correction for Run over 4 Revolutions			$+ \cdot 0098$
Correction for division-error of the space 100^d–99^d			$+ \cdot 0048$
True correction for Run in 4 Revolutions			$+ \cdot 0146$

Digitized by Google

The resulting value of the run $=14{\cdot}6$ (expressed in units $=\frac{1}{1000}$ of a revolution of the screw) corresponds with the value given for Dr. Auwers' determination of run in the detail of his observations on June 22.

It has been considered unnecessary to print either the details of the observations for run, or the chronometer comparisons with the transit-clock, as the results on different days afford a sufficient check for all practical purposes. If on any occasion the determination of the run or the comparison of the chronometer has inadvertently been omitted, the result is given as an "adopted value."

When position-angles are measured the general plan of observation is quite similar to that described for the distances, except that, in the process of "crossing" the images, the alternate motions are made by the distance handle 30, and the slow motions of final adjustment by the handles 79 or 80, and the position-circle is read instead of the scales. Both microscopes of the position-circle were always read, except in the case of very short distances, where the probable error of an observation is several minutes of arc; in the latter case (the circles being divided to $10'$ of arc) the positions of the index lines relative to the circle were estimated to the nearest minute of arc. One revolution of the position-circle micrometers is equal to $10'$ of arc. The head is divided into 60 parts, numbered at each 6th division, so that one part of the head corresponds to $10''$, and the reading is easily estimated to $1''$. In reading the position-circle microscopes on some nights the movable webs were pointed first on the "index line" and then on the circle division, the second reading *minus* the first being the amount to be added to the nearest even $10'$ reading of the circle smaller than the estimated reading. Generally, however, the "fixed wire" was pointed on the "index line" by the screw which moves the micrometer-box, and then the circle division was pointed upon by the movable wire. This plan saves two micrometer readings for each star-pointing, and requires only the determination of the coincidence reading for the fixed and movable wires. In general, this coincidence reading and the run of the position-circle microscopes were determined after those sets of observations when position-angles were observed, but the run was found to be practically insensible throughout, and the reading for coincidence was practically constant. Notes on these determinations will be found in the detailed observations.

Thus far no detailed mention has been made of the final direction of motion of the distance and position slow-motion handles in making the final adjustment in the star-pointings, nor of the changes subsequently made in the manner of using the reversing-prism.

Digitized by Google

Gill's original plan of observing distances was—

Pointing 1. Having made the apparent direction of separation in distance horizontal by the reversing-prism, the pointing was completed by final motion of the distance handle to the right (that is in the direction of motion of the hands of a watch).

2. The prism was rotated approximately 90° to the right (so as to reverse the apparent position of the objects 180°) and the pointing was completed by right-hand motion of the distance handle.

3. The prism was again turned 90° to the right, the segments and screw reversed, and the pointing completed by right-hand motion.

4. The prism again turned 90° and the pointing completed by right-hand motion.

For position-angles the apparent direction of motion produced by moving the slides was made vertical ; in pointings 1 and 4 the final motion of the position handle was to the right, and in 2 and 3 to the left, the prism was used as in the distances.

The advantages of this plan are (1) the use of the prism in four symmetrical positions ; (2) two opposite movements of the star-discs relative to the motion of the handle (right-hand motion produces increased distance in one position of the segments and decreased distance in the other) ; (3) opposite *apparent* motion of the discs in each position of the slides.

On these accounts the system seemed sufficiently symmetrical and complete.

Dr. Auwers, however, attached great importance to opposite motion of the position and distance handles in the same position of the segments as necessary for the elimination of possible mechanical defect, such as an elastic yielding after removal of the action of the observer's hand, and to attain this, began, from June 18 inclusive, simply to use the reversing-prism as a means to make the apparent direction of measurement vertical, and to make the two pointings in the same position of the segments in two opposite directions.

This plan seemed to me a sacrifice of unquestionable advantages in optical symmetry for a mechanical symmetry rather apparent than real. Dr. Auwers' objection to the original plan, viz., that there may be a mechanical recession or progression in the

Digitized by Google

distance of the optical centres *after* the observer has completed the motion of the handle, seems at first a very plausible one. But having regard to the manner in which motion is communicated to the slides,[1] it is not easy to see any reason for the existence of such an effect, still less that it is possible for the effect to be different in the two positions of the segments; and if it be the same in both positions of the segments its influence is entirely eliminated in the result. It is, of course, possible to imagine that the slides may move more freely in one position than in the reverse position, and consequently that this imaginary yielding may be greater in one position of the segments than in the other. If this be so there would be a real advantage in using a left as well as a right hand final motion in the pointings made in the same position of the segments, but as during my observations for stellar parallax I had been quite unable to detect any systematic difference between pointings made in the same position of the segments with opposite motion of the distance handle (showing, in fact, that the *sum* of the two yieldings was too small for detection) it seemed most probable that the *difference* of the two yieldings could only be of the most remote importance. I therefore retained the original plan of observing instead of adopting the modification introduced by Dr Auwers in his observations from June 18 to 29, inclusive.

But it is possible to imagine that under variable conditions of definition and steadiness of the images, there may be an accompanying variable personal tendency to move the handle too much, or too little, in the final adjustment of the pointings, which tendency could be most effectually counteracted by concluding each two successive pointings with opposite final motions of the handle, under otherwise precisely similar mechanical and optical conditions. Experience also showed that, with the aid of an assistant to make all notes and read out the successive settings etc., the rate and ease of working were so increased that 32 pointings might generally be made instead of 16, as arranged for in the original programme. For these reasons, on and after June 30, the following programme was adopted, which combines all the advantages of both those previously employed. The prism was not rotated during the first four pointings on each comparison star. Each measure of 4 pointings consisted of a

[1] The mechanical reasons for this statement are that motion of the segments is produced by a screw which terminates in a ball and socket bearing. A bevel-wheel is attached to the axis of this screw near the ball bearing, and this engages in another bevel-wheel whose axis is loosely jointed to the rod of the distance handle. When the observer ceases to turn the handle there results no change in the conditions of strain of the parts, except in the torsion of the axis of the screw. This torsion is so infinitesimal compared with the rigidity of the screw axis as to preclude the idea of its effect being of sensible angular value. But even granting the possibility of sensible torsion, the friction of the screw in its long bearing is so much greater than the friction of the ball in its socket, that the relief of the torsion would take place, not by any turning of the screw-threads, but by rotation of the ball in its socket.

Digitized by Google

pointing made one with final right-hand and one with final left-hand motion in each of the two positions of the segments. The prism was then rotated 90°, and the observations were repeated in the reverse order. The position-circle was then rotated 180° and the same observations repeated with reversal of the prism after the first eight pointings.

In the commencement of the Sappho observations Gill was compelled for a time to revert to his original method of observation because, in consequence of severe pain in the muscles of the neck, he was unable to undertake a longer programme than 16 pointings, both in the morning and evening. On September 29, however, he had so far recovered as to be able to revert to a programme of 32 pointings during the remainder of the work, which was arranged somewhat differently from the final Victoria programme, viz. :

Star *a*. 2 pointings with opposite final motion of handle, then reverse prism 90°.
2 ,, ,, ,, ,, ,, ,, ,, ,, segments.
2 ,, ,, ,, ,, ,, ,, ,, ,, prism 90°.
2 ,, ,, ,, ,, ,, ,,

Star *b*. 8 pointings arranged as above. Reverse Position-Circle.

Star *b*. 8 ,, ,, ,,

Star *a*. 8 ,, ,, ,,

The final Victoria programme is certainly preferable to that last described, because of the more frequent change from star to star, and the consequent more perfect elimination of irregularities in refraction and more complete elimination of progressive changes of scale-value and index-error. But the latter Sappho programme saves a considerable amount of time and labour in reversing segments and changing from star to star—a matter of importance when one observer is responsible for the observations of every morning and every evening.

The Cape Heliometer observations of *Victoria* and *Sappho* are printed in all necessary detail in the present volume.

Each observation is denoted by a rotation number for convenience of reference.

The chronometer time is given for each pointing as recorded by the assistant in the Observatory, and checked by the record of the slow moving chronograph.

In the next column are given the readings of the scales or position-circle.

Digitized by Google

In the third column are given the mean of the chronometer times corrected for chronometer error to true local sidereal time, and the resulting mean distance or the mean instrumental position-angle. These distances are corrected for division-error, and reduced to mean scale-value by aid of the preceding tables, A, B, and C. The position-angles are corrected for coincidence, but not for index-error or errors of equatorial adjustment.

In the foot notes are given—

1. The observer's estimate of the quality and steadiness of the images (1 denoting the best, and 4 the worst possible condition).

2. The value of the correction for run over one normal division (*i.e.*, over 4 revolutions), expressed in $\frac{1}{1000}$ parts of a revolution of the screw, as determined at the time.

3. When position-angles are measured, the correction applicable to the readings of the micrometer-head on account of non-coincidence of the fixed and movable webs at zero. This coincidence is determined in the same way as the coincidence in the scale-micrometer (described in the operation of observing the run).

4. The readings of the meteorological instruments.

   B = the reading of the barometer, expressed in inches.
   t = ,, ,, the attached thermometer in degrees Fahrenheit.
   T = ,, ,, the external thermometer in degrees Fahrenheit.

5. The observer's notes, and any necessary explanatory remarks.

Yale Observations.

The Yale Heliometer observations of *Victoria* and *Sappho* are printed in the form originally communicated by Dr. Elkin.

The *first* column gives the name of the star of comparison, and the rotation number of the observation.

The *second* column gives the chronometer time of each pointing as noted by an assistant in the Observatory.

Digitized by Google

The *third* column gives the readings of the scale-micrometer or the position-circle readings.

Dr. Elkin did not think it necessary to print the scale-readings, because the errors of the scales have not been determined for each division; the correction for these errors can thus be applied with the argument "distance," and the even number of revolutions can be inferred.

Thus No. (1), 1889 June 17. Hall (page 108).

Chronometer time. h	m	s	Micrometer. r	Mean. r
17	11	52	+0·632	+0·625
	13	52	+0·618	
	16	21	−0·860	−0·936
	17	31	−1·012	
			Sum	−0·311
			Add	452·r
			Sum	451·689 r as given in column 4.

The distance is here expressed in terms of semi-revolutions of the micrometer-screw.

The run was carefully adjusted, and remained practically insensible throughout. The errors of the micrometer-screw were carefully determined (Trans. Ast. Obs., Yale University, Vol. I., part 1, page 13), and prove to be insensible. The observed distance is, therefore, affected only by division-error, the corrections for which are subsequently applied.

In the preliminary comparison of Observed and Tabular Distances, the Yale observations are converted into arc with the mean value

For Elkin $r = 12''\cdot6816$ For Hall $r = 12''\cdot6791$

When position-angles are measured instead of distances, and if the distances are large (and consequently the position-circle is read by its microscope-micrometers) the readings of the latter only are given in the third column. In the Yale Heliometer the position-circle micrometer boxes are fixed, so that the observer must read not only

Digitized by Google

on the circle division, but also on the fixed division line which forms the index of the circle. Take, for example, Dr Elkin's observation of the Standard Stars, 1889 June 23, involving only two star-pointings, *see* p. 111.

The readings are reduced as follows :—

Chronometer Time.			Micro-scope.	Circle.	Index.	Circle *minus* Index.
h	m	s				
18	20	39	A	2′ 9″	8′ 59″	3′ 10″
			B	7 39	4 20	3 19
	22	57	A	1 29	8 57	2 32
			B	6 49	4 15	2 34
			Mean - - - - - -			2′ 54″
			Add degrees and minutes not printed			187° 10′
						187° 12′ 54″

Agreeing with the mean results printed in column 4.

When, as in the next observation (73 *p.*) the distance is small, so that the probable error of pointing is many times greater than a minute of arc, it would obviously be a waste of time to read the micrometers of the position-circle microscopes, it is sufficient to estimate the position of the index with respect to the circle divisions to the nearest minute or half minute. (To save room Dr. Elkin has denoted half minutes by an accent or dot—thus, instead of 20′·5, the reading is printed 20′·)[1.]

The instrumental position-angle is then the mean of the eight estimated readings of the verniers added to the mean of the even degrees observed.

The *fourth* column thus contains the mean instrumental distance or position-angle, and the mean of the observed chronometer times.

The readings of the meteorological instruments, the correction to reduce the chronometer time to local sidereal time, the quality of images and steadiness (on the same scale as the Cape observations), and any necessary remarks are given in the foot notes.

The observations were made in the same manner as that described for Gill's original plan of observing, p. 59.

[1.] The dots have been omitted in some sheets; the mean result is however correctly printed The omissions are mentioned in the list of Errata.

Digitized by Google

Leipzig Observations.

The printed observations represent the figures actually recorded by the assistant in the Observatory, except that the times have been corrected for chronometer error.

In pointing the observations of *Victoria* Dr. Peter made the final motion of the handle to the right, and turned the prism 90° to the right between the two pointings in the same position of the segments, but in the latter part of the Sappho observations, on Dr. Auwers' suggestion, the final motion of the handle was alternated in successive pointings, and each rotation of the prism is recorded. These reversals of motion only commenced on September 30. There will be found observations on July 31, August 30, 31, September 1, which were taken solely for the purpose of finding out whether Dr. Peter measures systematically differently with different directions of final motion of the handle, and with different positions of the prism. In these observations *i* or *e* before each horizontal line means that the final pointing has been made by a turn "in the direction" or "opposite to the direction" of the movement of the hands of a watch. In the Leipzig Heliometer the scales are each divided into 400 parts, scale A from 0 to 400, scale B from 400 to 800, two revolutions of the micrometer-screw correspond with the length of one division. The movable wire is pointed and read upon both scales, but as the run is very constant and the scale-readings very precise, only one division on each scale is read. The variations of the run are indeed very small, and in the mean nearly zero, and though determined every night its application produces no sensible difference on the mean result of any night's observation. There appear to be no determinations of the errors of division of the scales or of the micrometer-screw.

The method of reducing the observations may be illustrated by the first pointing on June 7.

Scale A.	Micrometer.	Scale B.	Micrometer.
232	842	541·8	442

These readings signify that the division 232 of scale A is *estimated* to coincide with 541·8 of scale B. Since there are no errors of division or run to be applied, the *measurement* of this estimation is simply "reading of microscope B" *minus* "reading of microscope A." Adding to this result the number of whole revolutions necessary to make the micrometer measurement correspond with the estimated reading, we have (since 2 revolutions of the screw are = 1 division of the scale)

Micrometer reading of scale B = (2)·442
" " " A ·842
B − A = 1·600 = 0·800 parts of scale.

The *measured* relative position of the scales thus happens to agree exactly with the *estimated* reading.

Digitized by Google

The actual reduction of the whole observation, if we assume the index error of scale A = i, will then be

Mic. B — Mic. A.	Scale A.	Scale B + ½ (B — A.)		
r 1·600	p 232 + i	p 541·800	A — (B — 400) =	p 90·200 + i
1·652	232 + i	541·826	„ „ =	90·174 + i
1·700	141 + i	632·850	(B — 400) — A =	91·850 — i
1·557	141 + i	632·778	„ „ =	91·778 — i
			Mean...	$91^{p}\cdot0005$

From the observations of the Standard stars an approximate mean value of

$$1^{p} = 21''\cdot7246\ [1\cdot3369520]$$

was determined, with which value the distances in seconds of arc were computed, as given in the results.

The observations of position-angle are entered as follows :—

The *first* column, as in the distances, gives the sidereal time of each pointing, then on the same line for each pointing are given for each microscope the whole degree and the estimated minute. The micrometer-screw head is divided into 600 parts and one revolution corresponds to 10′ on the circle, so that seconds of arc are read directly from the micrometer-head. For each micrometer is given the readings on the "following division," "the index," and the "preceding division," so that the position of the index with respect to the circle can be rigorously interpolated independently of any other determination of run. Practically the mean run has been determined for successive groups and the readings reduced in the ordinary way.

The readings of the meteorological instruments connected with the observations are printed by themselves, after the measures of position-angle, in the form originally communicated by Dr. Peter. The temperatures are given on the Centigrade scale, the barometer readings were taken from a Barograph and reduced to 0° C.

In the observations for instrumental adjustment, which are printed after the Sappho observations, the pointings are already corrected for runs, and are all referred to

Digitized by Google

microscope I. Each horizontal line is the mean of two pointings, and gives the position of the instrument when the star is at the point of intersection of the two wires. The following notes have been supplied by Dr. Peter :—

The Heliometer of the Leipzig Observatory has an aperture of 162^{mm}, and a focal length of 1·938 metres.

Before the opposition of Iris the following alterations were made :—instead of the Repsold wire-resistances, Engelmann's carbon-resistances were introduced throughout, and these are now in use ; for the two microscopes of the hour-circle (1), for the illumination of the scales (1), of the field of view (1), position and declination-circles (1), for the drum-head on the scale-microscope (1), for those on the microscopes for the position and declination circles (2). The introduction of the light for the hour-circle is effected by means of a spring-contact, and the same for position and declination-circles. A sliding-contact surrounding the support of the eye-piece allows the introduction of the light for the scale and the scale-microscope, for the field of view and also for the scale, scale-microscope and field of view simultaneously.

The cross-threads ( ) with their fittings are screwed directly into the draw-tube of the eye-piece, and are only turned by motion of the whole telescope in position-angle. At the eye-end there is a small position-circle (divided to single degrees), of which the part carrying the divisions is fixed to the eye-piece support, but in such a way that it can be moved away from the cross-threads independently. The eye-piece is screwed on to the part carrying the indices for this circle, and is capable of a second independent motion of rotation by the movement of the whole eye-piece support.

The eye-piece is not pushed into its setting, but is screwed in, so that the displacement parallel to the axis takes place by revolving : a clamp is provided to fix it in any arbitrary position. The eye-pieces of the reading microscopes have the same arrangement.

The eye-piece prism and double-refracting plate are fixed from the front on the eye-piece and can be revolved on their own account in the eye-piece cover.

The double refracting plate serves to determine the reciprocal distance of the half lenses.

The draw-tube of the eyepiece can be drawn out 95^{mm}. A ring-clamp fixes it in any desired position.

The scales are each divided into 400^{p} : one part corresponds to two revolutions of the micrometer-head.

The reading of the head is done by eye, a registering apparatus is not provided. The whole micrometer-box can be displaced parallel to the graduation by a second screw, so that the micrometer can be used as a differential-micrometer. One scale is numbered from 0 to 400, the other from 400 to 800.

The eye-piece used has a magnifying power of about 200.

The temperature of the objective-head has been determined by mercurial thermometers fixed on the two sides of it. For determining the temperature of the air a thermometer was suspended in the opening of the dome.

Digitized by Google

Göttingen Observations.

The Göttingen Heliometer resembles the Cape instrument in most of its essential features. Its aperture is 162^{mm}. Dr. Schur furnishes the following account of the methods of observation, etc.

The readings of the micrometer-head are printed as in the Cape Heliometer. Every measure of distance consists of 4 pointings; pointings 1 and 3 were made in the direction "*i*," and 2 and 4 in the direction "*e*" (*i.e.*, with the last motion of the handle respectively, "in the direction" or "opposite the direction" of motion of the hands of a watch), while the prism was placed in such a position that the stars moved in a horizontal direction towards each other on turning the distance handle. Of the two pairs of threads of the reading microscope, distant about half a revolution of the screw from one another, the preceding one was employed in the pointings "*i*" and the following in the pointings "*e*," and the readings with the former have been increased 50 divisions for reduction to the latter.

In passing to a lower division in the scale the readings increase by 4 revolutions (= 400 parts of the micrometer-head).

The correction of the measures of distance for errors of division is obtained from the expression $\frac{1}{8}(B-A+D-C)$ (that is if the resulting distance is to be expressed in terms of divisions of the scale), where the values of A, B, C, D, are given in the accompanying table for each single division of the scales, in units of the fourth decimal place of a part of the object glass-scale; and the correction for run is applicable to 400 parts of the micrometer-head, and is to be applied with the sign of the distance measured with the screw.

To the distances corrected for division-errors and run, there is still to be applied the correction for the adjustment of the focal reading and for temperature.

The expressions for the reading of the focal scale at different temperatures are

Before separation of lenses 1889 August 27	- Schur N=	$20\cdot89+0\cdot0354\ t^{\circ}$.	
After „ „ „ „ „	Schur	$21\cdot15$	$+0\cdot022\ t$
	Ambronn	$21\cdot42$	
	Hayn	$21\cdot57$	

The focal length of the object glass is, according to the figures given by Reinfelder and Hertel, $2608^{mm}\cdot7$, so that the theoretical reduction to the normal setting, for 1^{mm} and 100 parts of the scale is

$$+0\cdot0364\ (N-O).$$

Direct observations on the polar arc have, however, given

Schur - $+0\cdot0365$, or empirical coefficient $0\cdot948$.

Ambronn + $\cdot0341$, or „ „ $0\cdot886$.

Digitized by Google

The reduction of measured distances to 0° C is, for 100 parts of the Heliometer-scale,

Schur - $-0\cdot0007_{90}\ t°$, between $-9°\cdot6$ and $+22°\cdot2$.

Ambronn $-\ \cdot0007_{17}$ $-12\cdot0$ and $+23\cdot8$.

The errors of adjustment of the equatorial mounting, according to Chauvenet's notation, are

$$\xi = -17'', \eta = -76'', c = -1'', i = +60'', \epsilon = +54'', i_1 = +18''$$

The following observations were made to determine the zero of the position-circle, by revolving the instrument on the Declination Axis when directed to a Horizontal Collimator towards the North.

	Tel. East.	Tel. West.	Mean.	W–E.
1889 June 13	359° 58′ 44″	360° 0′ 43″	359° 59′ 44″	(+ 1′ 59″)
Aug. 16	359 58 50	359 59 20	59 5	+ 0′ 30″
Sep. 30	59 13	359 59 34	59 24	+ 21
1890 Feb. 12	59 43	360 0 0	59 52	+ 17
Nov. 12	59 55	359 59 44	59 50	− 11

In the determination of 1889 June 13, the measures were not made with the micrometer-head, but the position of the index in the 10′ space was estimated by eye.

The whole of the observations were made with an eye-piece magnifying 174 diameters.

The reduction in brightness of a star of the third magnitude amounts for

Screen I. to 1·4 magnitude.

„ II. „ 2·2 „

„ III. „ 2·5 „

In the clock corrections for the electric dial there appear at times jumps in the seconds in course of an evening. These are, however, quite certain, as there is in the observing room a minute bell connected with the normal clock, by which the dial can always be checked. Only on 1889 Oct. 16, is there any doubt about the clock correction, as the normal clock was disturbed by the contact apparatus.

For reasons which are abundantly explained in connection with the discussion, no attempt has been made to apply corrections for temperature, focal reading, etc., as the definitive corrections for instantaneous scale-value are obtained exclusively from the observations themselves, either from discussion of observations from stars on opposite sides of the planet, or from observations of the Standard stars.

Digitized by Google

The observations of distance have been, in fact, reduced on the same plan as the Cape observations, employing the mean values

1 Division = 4 Rev. = 40″·0129 [1·6022000]

The value of the run has been taken from the following table supplied by Dr. Schur.

Corrections for Run *per* Screw Revolution.

1889 March	4	— July	1	= — 0ʳ·0010
July	4	— Aug.	25	= — ·0019
1889 Oct.	3	1890 March	2	= — ·0029

In the reduction of the position-angles the following values of the run have been deduced from the observations and adopted.

	Mic. I.	Mic. II.
June 20–25	+1″·8	−0·6
July 9–Aug. 10	−3·5	−0·3
Aug. 16–25	−7·0	−2·1
Oct. 3–6	−7·7	−4·4

The observed times are given corrected for clock-error to Göttingen sidereal time.

Digitized by Google

DIVISION ERRORS OF THE GÖTTINGEN HELIOMETER,

Expressed in units of the fourth decimal place of a revolution of the screw.

A.		B.		C.		D.		A.		B.		C.		D.	
Div.	Corr.	Div.	Corr.	Div.	Corr.	Div.	Corr.	Div.	Corr.	Div.	Corr.	Div.	Corr.	Div.	Corr.
...	...	196	+ 75	...	...	...	...	59	+ 1	149	−105	259	+ 45	349	− 81
...	...	195	+106	213	+ 41	395	+ 30	60	+ 30	148	−132	260	+ 78	348	−104
14	0	194	+ 70	214	+ 70	394	0	61	− 45	147	−133	261	+ 23	347	− 92
15	+ 19	193	+ 88	215	+ 80	393	− 16	62	+ 30	146	− 96	262	+ 75	346	− 37
16	+ 47	192	+ 52	216	+143	392	− 3	63	+ 74	145	−114	263	+ 98	345	− 49
17	+ 37	191	+ 44	217	+ 90	391	− 23	64	+ 64	144	− 67	264	+ 95	344	− 36
18	+ 35	190	+ 64	218	+103	390	− 7	65	+ 14	143	− 56	265	+ 78	343	− 24
19	+ 32	189	− 1	219	+113	389	− 18	66	+ 56	142	+ 15	266	+ 89	342	+ 60
20	+ 56	188	+ 70	220	+155	388	− 39	67	+ 2	141	− 50	267	+ 88	341	+ 5
21	+ 45	187	+ 87	221	+157	387	+ 25	68	+ 48	140	− 98	268	+107	340	− 49
22	+ 67	186	+ 55	222	+119	386	− 25	69	+ 64	139	− 87	269	+140	339	− 1
23	+ 66	185	+ 6	223	+119	385	− 30	70	+ 23	138	−101	270	+ 95	338	− 9
24	+ 80	184	+ 60	224	+140	384	+ 11	71	− 7	137	− 58	271	+ 82	337	− 16
25	+ 59	183	+ 18	225	+109	383	− 65	72	+ 33	136	− 83	272	+ 84	336	+ 9
26	+ 64	182	− 84	226	+109	382	−130	73	+ 14	135	− 79	273	+ 96	335	− 35
27	+ 25	181	− 15	227	+ 80	381	− 79	74	+ 94	134	−154	274	+130	334	− 68
28	− 1	180	+ 66	228	+ 63	380	− 11	75	+ 44	133	−169	275	+105	333	− 81
29	− 14	179	− 29	229	+ 66	379	− 74	76	− 7	132	−111	276	+ 35	332	− 42
30	+ 41	178	− 44	230	+ 97	378	− 83	77	+ 81	131	−132	277	+ 78	331	− 81
31	+ 53	177	− 61	231	+ 85	377	− 68	78	+ 4	130	−135	278	+ 15	330	− 48
32	+ 35	176	− 43	232	+ 52	376	−106	79	+ 77	129	−207	279	+ 87	329	−111
33	− 22	175	− 77	233	+ 5	375	−115	80	+ 94	128	−215	280	+111	328	−124
34	+ 39	174	−100	234	+ 74	374	−197	81	+ 79	127	−201	281	+141	327	−172
35	+ 1	173	−169	235	+ 42	373	−224	82	− 17	126	−158	282	+ 10	326	− 67
36	− 26	172	− 51	236	+ 34	372	− 98	83	+ 71	125	−187	283	+100	325	−103
37	− 17	171	−183	237	+ 18	371	−184	84	+ 76	124	−164	284	+ 96	324	− 82
38	− 92	170	−125	238	− 41	370	−144	85	+108	123	−193	285	+117	323	− 97
39	− 63	169	− 84	239	− 36	369	−175	86	+ 70	122	−244	286	+ 86	322	−124
40	− 28	168	− 77	240	+ 8	368	−118	87	+ 81	121	−226	287	+143	321	−135
41	− 32	167	−113	241	+ 9	367	−177	88	+ 68	120	−177	288	+143	320	− 58
42	− 56	166	− 58	242	− 13	366	−107	89	+114	119	−178	289	+163	319	−114
43	−108	165	− 72	243	− 79	365	− 87	90	+108	118	−160	290	+121	318	− 83
44	− 2	164	−128	244	+ 47	364	−143	91	+ 48	117	−201	291	+ 60	317	− 90
45	− 6	163	−134	245	+ 38	363	−129	92	+ 65	116	−176	292	+ 71	316	−109
46	− 9	162	−134	246	+ 15	362	−149	93	+ 90	115	−126	293	+ 86	315	− 49
47	− 21	161	−142	247	− 24	361	−162	94	+ 69	114	− 71	294	+ 97	314	− 38
48	− 9	160	−144	248	− 22	360	−138	95	+ 16	113	− 48	295	+ 58	313	+ 5
49	+ 1	159	−229	249	− 22	359	−259	96	− 40	112	− 77	296	+ 20	312	− 69
50	− 6	158	−174	250	+ 32	358	−200	97	− 28	111	−104	297	+ 49	311	− 41
51	− 9	157	−120	251	+ 23	357	−185	98	− 93	110	− 91	298	− 6	310	− 77
52	+ 30	156	− 97	252	+ 9	356	−134	99	− 28	109	− 51	299	+ 1	309	− 5
53	− 4	155	−157	253	− 9	355	−140	100	− 74	108	− 52	300	− 14	308	− 24
54	+ 4	154	−187	254	+ 16	354	−220	101	− 61	107	− 92	301	+ 8	307	− 29
55	− 23	153	− 77	255	+ 12	353	− 89	102	− 50	106	−108	302	+ 5	306	− 72
56	− 19	152	− 89	256	− 7	352	− 76	103	− 46	105	− 22	303	+ 3	305	+ 1
57	− 25	151	−100	257	+ 1	351	− 70	104	− 79	104	− 79	304	− 17	304	− 17
58	− 11	150	− 45	258	+ 35	350	− 31								

Digitized by Google

Bamberg Observations.

The Bamberg Heliometer resembles the Cape and Göttingen instruments in all essentials. The instrumental distances have been reduced to arc by the approximate scale-value.

1 Division = 4 Rev. = 39″·9592 [1·6016173]

The scale-divisions were read by two pairs of wires differing approximately 0r·5 of the micrometer-screw. It is noted that from July 31 the observations were made alternately "*i*" and "*e*."

Digitized by Google

CAPE

OBSERVATIONS OF VICTORIA

IN

1889.

A 12363—400—4/93 Wt 183 D & S.

Digitized by Google

CAPE OBSERVATIONS OF VICTORIA.

1889, June 10. AUWERS.

Victoria and — 9°·5382. (μ) (1)

Chronometer Time.	Readings of Scale or Position Circle. A	Readings of Scale or Position Circle. B	Cape Sid. Time. — Distance or P. Angle.
h m s	° ′	′ ″ ′ ″	h m s
17 16 39	301 30 ;	2 52, 0 21	17 21 52·9
20 5		2 34, 0 36	
23 8	301 20 ;	2 45, 1 59	° ′ ″
26 42		3 32, 4 45	301 27 43·5

Victoria and — 9°·5382. (μ) (2)

Chronometer Time.	Readings of Scale or Position Circle. A	Readings of Scale or Position Circle. B	Cape Sid. Time. — Distance or P. Angle.
h m	° ′	′ ″ ′ ″	h m s
17 30 5	121 20 ;	6 15, 5 29	17 35 9·2
32 13		7 17, 5 39	
37 20	121 40 ;	2 50, 2 5	° ′ ″
40 0		3 47, 3 6	301 34 36·5

Tube W.

Chronometer Slow.

	h m	s
At	15 42	+ 13·8
	18 12	+ 14·7

	B	t	T
	in.	°	°
At 15 46	30·16	57·1	56·4
18 0	30·14	56·6	56·6

Correction for Coincidence in Position Angles, + 2″·5.
No note as to quality of the definition.
A star was inadvertently observed instead of the planet with —8°·5237.

1889, June 10. GILL.

Victoria and — 8°·5237. (κ) (3)

Chronometer Time.	Readings of Scale or Position Circle. r	Cape Sid. Time. — Distance or P. Angle.
h m s		h m s
22 8 22	128 271 4·846	22 12 48·5
10 59	·970	
13 42	71 329 3·617	″
17 6	·502	2298·696

Victoria and — 9°·5382. (μ) (4)

Chronometer Time.	Readings of Scale or Position Circle. r	Cape Sid. Time. — Distance or P. Angle.
h m s		h m s
22 26 56	74 326 4·289	22 32 22·6
29 20	·400	
33 59	125 274 4·089	″
38 10	·058	2066·186

Victoria and — 9°·5382. (μ) (5)

Chronometer Time.	Readings of Scale or Position Circle.	Cape Sid. Time. — Distance or P. Angle.
h m s		h m s
22 44 16	126 275 3·889	22 49 4·2
46 32	·789	
49 9	74 326 4·805	″
55 14	·980	2070·117

Victoria and — 8°·5237. (κ) (6)

Chronometer Time.	Readings of Scale or Position Circle.	Cape Sid. Time. — Distance or P. Angle.
h m s		h m s
23 5 55	71 329 2·138	23 17 45·0
11 30	·016	
16 42	128 272 2·777	″
26 16	·915	2280·877
30 31	3·125	
31 29	·103	

Chronometer Slow.

	h m	s
At	21 40	+ 16·1
	23 43	+ 16·7

	B	t	T
	in.	°	°
At 23 35	30·05	57·5	58·0

Run + 0ᵈ·015.
I. 3 and 3–4 ; S. 3.
At times the images were so ill-defined as to be unmeasurable, hence occasionally considerable delay between successive pointings.
The Meteorological Instruments were not read immediately before the morning observations ; the factors for the refraction have, therefore, been interpolated between those corresponding to the readings at 18ʰ 0ᵐ and 23ʰ 35ᵐ.

Digitized by Google

Chronometer Time.	Readings of Scale or Position Circle.	Cape Sid. Time. — Distance or P. Angle.	Chronometer Time.	Readings of Scale or Position Circle.	Cape Sid. Time. — Distance or P. Angle.
		1889, June 15. AUWERS.			
	Victoria and — 9°·5382. (μ) (7)			Victoria and — 6°·5360. (θ) (8)	
h m s	r	h m s	h m s	r	h m s
22 22 18	157 244 2·649	22 28 2·4	22 37 20	36 363 5·730	22 41 13·8
26 28	·551	"	39 44	·753	"
28 56	43 358 2·203	4568·746	41 12	163 237 2·868	5086·030
30 18	·214		42 29	·987	
	Victoria and — 6°·5360. (θ) (9)			Victoria and — 9°·5382. (μ) (10)	
22 44 48	163 237 3·050	h m s	22 54 31	43 358 3·240	h m s
45 58	·104	22 48 23·6	56 26	·287	22 58 28·5
48 32	36 363 5·432 (1)	"	58 39	157 243 5·220	"
50 6	·398	5083·635	23 0 4	·147	4581·100

Chronometer Slow.
h m m s
At 23 24 + 1 2·8
Losing 0s·4 hourly.

	B	t	T
h m	in.	°	°
At 22 15	30·29	45·2	42·0
23 5	30·28	44·7	41·4

Run + 0r·015.
I. and S. 2–3.
(1) Planet very faint.
The full moon was near, and a strong haze throughout. Sky clouded up after last pointing.

		1889, June 16. AUWERS.			
	Victoria and — 9°·5382. (μ) (11)			Victoria and — 6°·5360. (θ) (12)	
	Estimated A B			Estimated. A B	
h m s	° ′ ′ ″ ′ ″	h m s	h m s	° ′ ′ ″ ′ ″	h m s
17 22 17	332 59; 9 12, 8 27	17 28 32·5	17 38 32	323 39; 9 18, 8 33	17 43 23·3
25 31	9 12, 8 30	° ′ ″	40 35	9 28, 8 48	° ′ ″
29 46	333 6; 5 6, 4 8	333 1 50	43 56	323 34; 4 1, 3 15	143 36 23
31 57	4 58, 4 4		45 51	3 43, 2 57	
	Victoria and — 6°·5360. (θ) (13)			Victoria and — 9° 5382. (μ) (14)	
17 48 50	143 34; 3 11, 2 40	h m s	18 2 1	153 6; 5 57, 5 38	h m s
50 42	3 6, 2 33	17 53 11·9	3 32	6 28, 6 8	18 7 16·3
53 21	143 39; 9 5, 8 44	° ″	8 31	153 0; 9 51, 9 43	° ′ ″
55 15	9 8, 8 52	143 36 3	10 21	9 54, 9 36	333 3 2

Tube W.
Coincidence of Mic. A 0′ 7″ / B 9 38 } Correction + 0′ 7″·5
I. and S. 3.

Chronometer Slow.
h m m s
At 17 0 + 1 9·5
Losing 0s·4 hourly.

	B	t	T
h m	in.	°	°
At 17 12	30·18	50·3	48·0
18 15	30·18	49·9	47·3

Digitized by Google

Chronometer Time.	Readings of Scale or Position Circle.	Cape Sid. Time. / Distance or P. Angle.	Chronometer Time.	Readings of Scale or Position Circle.	Cape Sid. Time. / Distance or P. Angle.
1889, June 17. GILL.					
	Victoria and — 9°·5382. (μ) (15)			Victoria and — 6°·5360. (θ) (16)	
h m s	Estimated A B	h m s	h m s	Estimated A B	h m s
16 40 10	° ′ ′ ″ ′ ″	16 48 46·8	17 4 30	° ′ ′ ″ ′ ″	17 12 12·5
44 30	153 47 ; 7 8, —	° ′ ″	7 41	141 21 ; 1 8, 0 25	° ′ ″
50 35	6 30. 5 31	333 42 46	12 52	1 0, 0 10	141 24 8
54 40	153 40 ; 9 48, 8 58		18 34	141 29 ; 8 49, 8 0	
	0 2, 9 10			7 59, 6 48	
	Victoria and — 6°·5360. (θ) (17)			Victoria and — 9°·5382. (μ) (18)	
17 24 15	321 28 ; 7 35, 6 38	h m s	17 52 44	333 40 ; 0 33, 0 8	h m s
29 32	6 42, 5 40	17 32 48·6	56 44	1 53, 9 54	18 1 53·7
34 15	321 19 ; 9 30, 8 35	° ′ ″	18 3 50	333 45 ; 5 40, 4 36	° ′ ″
37 59	8 57, 7 58	141 22 33	9 3	5 40, 4 40	333 42 44

Coincidence of Mic. A 0′ 15″ / B 0 3 } Correction — 0′ 9″

There is no note regarding quality of the images.

Chronometer Slow.

h m m s
At 16 12 + 1 17·8
Losing 0s·35 per hour.

	B	t	T
h m	in.	°	°
At 16 35	30·32	55·5	56·0
18 15	30·34	55·7	56·0

1889, June 17. AUWERS.					
	Victoria and — 9°·5382. (μ) (19)			Victoria and — 6°·5360. (θ) (20)	
h m s	r	h m s	h m s	r	h m s
22 14 16	171 229 3·589	22 18 51·3	22 27 2	50 350 3·269	22 30 35·0
15 42	·611	″	27 59	·192	″
18 36	28 371 5·113	5721·270	29 48	149 250 5·511	3977·731
21 31	·231		32 11	·590	
	Victoria and — 6°·5360. (θ) (21)			Victoria and — 9°·5382. (μ) (22)	
22 35 59	149 250 5·701	h m s	22 49 44	28 372 2·251	h m s
37 41 } (1)	·856 }	22 41 40·6	51 7	·470	22 53 39·0
39 24 }	·903 }	″	53 25	171 229 2·038	″
42 24	50 350 2·567	3973·104	54 59	·030	5735·052
44 26	·536				
	Victoria and — 9°·5382. (μ) (23)			Victoria and — 6°·5360. (θ) (24)	
22 56 45	171 229 1·960	h m s	23 14 59	50 349 5·124	h m s
58 8	·909	23 0 55·1	16 43	·116	23 18 47·1
23 1 4	28 372 2·770	″	18 32	149 251 3·549	″
2 22	·752	5737·574	19 33	·608	3957·081

Digitized by Google

Chronometer Time.	Readings of Scale or Position Circle.	Cape Sid. Time. / Distance or P. Angle.	Chronometer Time.	Readings of Scale or Position Circle.	Cape Sid. Time. / Distance or P. Angle.

1889, June 17. AUWERS—*continued.*

	Victoria and — 6°·5360. (θ) (25)			Victoria and — 9°·5382. (μ) (26)	
h m s	r	h m s	h m s	r	h m s
23 22 8	149 251 3·791	23 25 49·4	23 33 12	28 372 4·021	23 36 50·8
23 30	·866	″	34 17	·117	″
25 34	50 349 4·757	3953·726	36 29	172 229 4·318	5752·090
26 44	51 350 ·655		38 3	·381	

Chronometer Slow.

Run + 0ʳ·018.

	h m m s		h m	B in.	t °	T °
At	0 3 + 1 20·6	At	22 0	30·32	55·6	56·9
Losing	0ˢ·35 per hour.		23 57	30·32	56·3	57·2

(¹) Mean of the two pointings at 22ʰ 37ᵐ 41ˢ and 22ʰ 39ᵐ 24ˢ to be taken as one.
Good definition till 22ʰ 33ᵐ; afterwards images generally very diffused, strong wind, bad observations except first 8 pointings.

1889, June 18. AUWERS.

	Victoria and — 9°·5382. (μ) (27)			Victoria and — 6°·5360. (θ) (28)	
	Estimated A B			Estimated A B	
h m s	° ′ ′ ″ ′ ″	h m s	h m s	° ′ ′ ″ ′ ″	h m s
16 13 7	333 56; 7 45, 6 46	16 17 2·1	16 29 32	319 4; 3 14, 2 14	16 33 45·3
15 44	7 34, 6 32	° ′ ″	31 42	2 26, 1 31	° ′ ″
19 30	334 2; 2 0, 0 58	333 59 18	35 18	318 56; 5 46, 4 56	138 58 34
21 35	2 32, 1 32		37 54	5 28, 4 31	
			40 10	5 20, 4 28	

	Victoria and — 6°·5360. (θ) (29)			Victoria and — 9°·5382. (μ) (30)	
16 42 55	138 54; 3 54, 3 18	h m s	16 54 34	154 3; 2 40, 1 56	h m s
44 43	4 26, 3 44	16 45 24·4	56 47	2 41, 1 54	16 57 43·1
47 10	139 3; 2 0, 1 28	° ′ ″	59 57	153 56; 7 21, 6 34	° ′ ″
48 37	1 44, 1 14	138 57 34	17 1 22	7 28, 6 42	333 59 31

Chronometer Slow.*

	h m m s		h m	B in.	t °	T °
At	15 55 — 0 27·0	At	15 58	30·16	53·2	48·8
Losing	0ˢ·14 hourly.		17 50	30·16	50·5	46·1

Coincidence was not determined; a correction of — 9″ is assumed and applied in the reduction. I. at first bad, soon 2–3.

* The chronometer employed was the Sid. Chronometer Dent, 1589, and not Dr. Gill's Sidereal Chronometer, which was employed on every other date.

In the observations of Position Angle to-day, the prism was used only to make the line passing through both objects horizontal, and the fine motion screw of the Position Circle was turned alternately to the right and to the left (in the first observation of each group always to the right, as also in the scale screw in measuring distances).

1889, June 18. GILL.

	Victoria and — 9°·5382. (μ) (31)			Victoria and — 6°·5360. (θ) (32)	
m s	Scales r	h m s	h m s	Scales r	h m s
22 24 36	178 221 4·954	22 28 41·5	22 40 11	57 343 2·350	22 42 3·0
27 0	·792	″	41 8	·165	″
29 50	21 379 3·799	6310·190	43 43	142 258 2·437	3406·980
35 5	4·110		44 55	·528	

Digitized by Google

Chronometer Time.	Readings of Scale or Position Circle.	Cape Sid. Time. / Distance or P. Angle.	Chronometer Time.	Readings of Scale or Position Circle.	Cape Sid. Time. / Distance or P. Angle.
		1889, June 18. GILL—*continued.*			
	Victoria and — 6°·5360. (θ) (33)			Victoria and — 9°·5382. (μ) (34)	
h m s	Scales r	h m s	h m s	Scales r	h m s
22 46 9	142 258 2·558	22 48 51·2	23 1 53	21 379 5·191	23 4 44·0
47 42	·601	″	3 33	·250	″
49 53	57 343 1·929	3404·252	6 41	179 222 3·213	6325·189
53 26	57 342 5·689		8 34	·115	
		Reversed Position Circle.			
	Victoria and — 9°·5382. (μ) (35)			Victoria and — 6°·5360. (θ) (36)	
23 16 5	179 222 2·590	h m s	23 32 3	58 343 4·219	h m s
17 46	·731	23 19 37·3	33 59	·089	23 34 2·6
22 8	21 380 2·079	″	35 19	142 258 4·535	″
24 15	·215	6332·341	36 34	·688	3385·751
	Victoria and — 6°·5360. (θ) (37)			Victoria and — 9°·5382. (μ) (38)	
23 37 40	142 258 4·650	h m s	23 45 56	21 380 3·047	h m s
38 29	·702	23 39 16·1	47 50	·160	23 48 26·4
40 30	58 343 3·836	″	49 56	179 221 5·470	″
42 10	·675	3383·419	51 48	·258	6343·568

Chronometer Slow.

	h m	m s		h m	in	°	°
Run + 0s·013.	At 0 2	— 0 26·1	B	At 22 20	30·07	45·8	42·0
I. 2; S. 2.	Losing 0s·14 hourly.		t	23 55	30·07	45·5	41·4
			T				

The focal reading of the Eye-piece was changed after (34). Gill having in mistake begun his observations with Auwers' setting of the eye-piece scale.

1889, June 19. GILL.

	Victoria and — 7°·5183. (λ) (39)			Victoria and — 7°·5183. (λ) (40)	
h m s	Scales r	h m s	h m s	Scales r	h m s
15 [illegible] 47	113 287 5·097	16 5 30·7	16 11 19	87 314 3·540	16 16 25·0
16 3 8	·015	″	13 34	·395	″
5 10	87 314 3·475	1054·400	16 3	113 287 5·104	1054·450
7 41	·439		18 27	·009	
	Victoria and — 7°·5183. (λ) (41)			Standard Stars. (42)	
16 19 46	113 287 5·175	h m s	16 32 49	19 381 2·005	h m s
20 32	·035	16 23 47·8	34 16	1·995	16 36 59·6
22 37	86 313 3·490	″	36 35	180 220 2·426	″
25 59	·456	1054·193	38 1	·421	6453·122

Digitized by Google

Chronometer Time.	Readings of Scale or Position Circle.	Cape Sid. Time. — Distance or P. Angle.	Chronometer Time.	Readings of Scale or Position Circle.	Cape Sid. Time. — Distance or P. Angle.

1889, June 19. GILL—*continued.*

Standard Stars. (43)

Chronometer Time.	Estd. Angle	A	B	Cape Sid. Time. — Distance or P. Angle.
h m s	° ′	′ ″	′ ″	h m s
16 47 25	97 51 ;	1 7,	0 20	17 3 45·3
58 1		0 55,	0 8	° ′ ″
17 9 1	97 47 ;	6 49,	5 51	97 48 13
14 16		6 30,	5 36	

Chronometer Slow.

	h	m	m	s
At	15	22	+ 1	33·9
Losing	0	0	0	37 hourly.

	B	t	T
	h m	in.	°	°
At	16 9	29·87	55·5	55·0
	17 20	29·83	56·0	55·1

Run + 0s·023
Mic. A Zero 15″ / B 8″ } Correction — 12″

I. 2; S. 2 { The quality of the definition is not noted for the Victoria Observations, but is noted I. 2, S. 2 for observations of β Centauri earlier in the same evening. Cloud prevented continuance of observation.

1889, June 21. GILL.

Victoria and — 6°·5360. (θ) (44)

	A	B	
h m s	° ′	′	h m s
15 55 15	127 45·5 ;	45·5	16 1 8·6
57 40	49·5 ;	49·0	° ′ ″
16 0 20	31·0 ;	30·5	127 38 56
3 57	30·5 ;	30·0	

Victoria and — 7°·5183. (λ) (45)

	A	B	
h m s	° ′	′	h m s
16 12 12	107 58·0 ;	57·5	16 19 56·7
17 21	108 0·0 ;	59·5	° ′ ″
20 21	108 19·0 ;	19·0	288 8 34
22 30	18·0 ;	17·5	

Reversed Position Circle.

Victoria and — 7°·5183. (λ) (46)

16 28 56	288 21·0 ;	20·0
32 3	22·0 ;	21·5
38 49	12·0 ;	11·5
40 54	13·5 ;	13·0

h m s
16 37 1·3
° ′ ″
288 16 49

Victoria and — 6°·5360. (θ) (47)

16 47 55	307 22·5 ;	22·0
52 10	22·0 ;	21·5
54 45	32·0 ;	31·5
56 20	33·5 ;	33·0

h m s
16 54 38·4
° ′ ″
127 27 15

Victoria and — 6°·5360. (θ) (48)

	Scales	r
17 4 9	123 278	3·707
5 28		·783
9 37	77 323	4·612
11 45		·641

h m s
17 9 35·8
″
1828·718

Victoria and — 7°·5183. (λ) (49)

	Scales	r
17 18 4	79 320	4·260
22 3		·360
24 3	120 280	4·141
25 45		·060

h m s
17 24 19·9
″
1624·793

Reversed Position Circle.

Victoria and — 7°·5183. (λ) (50)

17 29 38	120 280	3·864
32 3		·829
34 54	79 320	4·797
36 58		·960

h m s
17 35 14·6
″
1628·929

Victoria and — 6°·5360. (θ) (51)

17 42 46	77 323	3·302
45·16		·187
47·16	122 277	3·517
49·42		·545

h m s
17 48 6·4
″
1812·780

Digitized by Google

1889, June 21. GILL—*continued.*

Standard Stars. (52)

Chronometer Time.	Readings of Scale or Position Circle.	Cape Sid. Time. — Distance or P. Angle.
h m s	Scale r	h m s
17 57 20	180 220 2·449	18 2 22·8
59 13	·460	"
18 0 56	19 381 2·169	6453·721
4 36	·128	

Chronometer Slow.

	h	m	m	s
At	15	31	+ 1	50·4
	23	6	+ 1	53·5

Run + 0r·011.

	h	m	B in.	t °	T °
At	16	8	30·30	48·8	46·3
	17	0	30·32	48·0	44·8
	17	53	30·32	47·2	45·0.

The images were steady and would have been well-defined, but were rendered very faint by mist. A fog came up at 3.30 a.m. which prevented morning observations by Dr. Auwers.

1889, June 22. AUWERS.

Standard Stars. (53)

Chronometer Time.	Readings of Scale or Position Circle.	Cape Sid. Time. — Distance or P. Angle.
h m s	Scales r	h m s
15 57 27	19 381 2·074	16 2 24·1
58 49	·217	"
16 1 40	180 220 2·518	6453·285
3 42	·558	

Victoria and — 7°·5183. (λ) (54)

Chronometer Time.	A °	B ′	Cape Sid. Time. — Distance or P. Angle.
h m s			h m s
16 38 14	298 18·0	17·0	16 42 17·1
39 39	18·0	17·0	° ′ ″
40 55	8·5	7·0	298 12 34
42 21	8·0	7·0	

Victoria and — 6°·5360. (θ) (55)

Chronometer Time.	A °	B ′	Cape Sid. Time. — Distance or P. Angle.
h m s			h m s
16 46 31	298 56·5	56·0	16 50 57·0
48 6	54·0	53·5	° ′ ″
49 51	299 13·0	11·5	119 3 55
51 20	14·0	13·0	

Victoria and — 6°·5360. (θ) (56)

Chronometer Time.	A °	B ′	Cape Sid. Time. — Distance or P. Angle.
h m s			h m s
16 53 53	119 11·5	11·0	16 57 42·3
54 49	13·0	12·0	° ′ ″
56 28	118 49·5	49·0	119 0 28
57 39	49·5	48·5	

Victoria and — 7°·5183. (λ) (57)

Chronometer Time.	Readings of Scale or Position Circle.	Cape Sid. Time. — Distance or P. Angle.
h m s		h m s
17 6 31	118 14·5 13·5	17 10 31·3
7 52	14·5 14·0	° ′ ″
9 22	26·5 26·0	298 20 34
10 20	28·0 27·5	

Victoria and — 7°·5183. (λ) (58)

Chronometer Time.	Readings of Scale or Position Circle.	Cape Sid. Time. — Distance or P. Angle.
h m s	Scales r	h m s
17 12 37	126 273 4·295	17 19 41·5
14 34	·110	"
16 15	·094	2147·817
17 37	3·978	
19 24	73 327 4·640	
20 50	·699	

Victoria and — 6°·5360. (θ) (59)

Reversed Position Circle.

Chronometer Time.	Readings of Scale or Position Circle.	Cape Sid. Time. — Distance or P. Angle.
h m s	Scales r	h m s
17 24 42	84 316 3·278	17 28 41·2
25 44	·166	"
27 33	115 284 5·490	1251·547
28 45	·460	

Victoria and — 6°·5360. (θ) (60)

Chronometer Time.	Readings of Scale or Position Circle.	Cape Sid. Time. — Distance or P. Angle.
h m s		h m s
17 31 50	115 284 5·688	17 35 26·6
32 49	·650	"
34 5	84 316 2·855	1248·592
35 2	·803	

Digitized by Google

Chronometer Time.	Readings of Scale or Position Circle.	Cape Sid. Time. — Distance or P. Angle.	Chronometer Time.	Readings of Scale or Position Circle.	Cape Sid Time. — Distance or P. Angle.

1889, June 22. AUWERS—*continued*.

	Victoria and — 7°·5183. (λ) (61)			Standard Stars. (62)	
h m s	Scales r	h m s	h m s	r	h m s
17 38 42	73 327 5·450	17 42 58·7	17 46 22	180 220 2·399	17 50 34·7
40 29	·472	"	47 49	·406	"
41 51	127 274 3·068	2157·267	49 41	19 381 2·208	6454·374
42 52	2·990		50 26	·245	

Chronometer Slow.

	h m	m s		B	t	T
Run + 0r·015	At 15 28	+ 1 59·4		h m	in.	° °
I. 2-3 ; S. 2-3.	Losing 0s·4 hourly.		At	15 30	30·24	51·6 49·4
				17 55	30·20	48·4 45·0

In each pair, first observation moving handle to right ; and in second observation to the left. The prism was not reversed, but used only to make the controlling motion apparently horizontal.

1889, June 22. GILL.

	Victoria and — 6°·5360. (θ) (63)				Victoria and — 7°·5183. (λ) (64)		
	A	B			A	B	
h m s	° ′	′	h m s	h m s	° ′	′	h m s
22 7 52	116 39·5	40·0	22 14 17·6	22 27 7	119 33·0	34·0	22 34 16·5
10 5	36·5	37·0	° ′ ″	30 11	35·0	35·5	° ′ ″
14 7	13·0	13·0	116 25 36	32 38	48·0	49·0	299 41 23
16 58	10·5	11·0		39 1	48·0	48·5	

	Victoria and — 7°·5183. (λ) (65)			Victoria and — 7°·5183. (λ) (66)		
	r			r		
22 43 24	128 272 2·657	h m	22 58 51	71 329 2·748	h m s	
46 8	·336	22 50 0·8	23 0 23	·700	23 3 45·4	
50 6	71 329 2·330	"	2 29	128 271 5·686	"	
52 16	·462	2284·915	5 9	·596	2290·799	
	Reversed Position Circle.					

	Victoria and — 6°·5360. (θ) (67)			Victoria and — 6°·5360. (θ) (68)		
				c A B		
23 25 48	113 286 4·300	h m s	23 41 42	295 18·5 —	h m s	
28 48	·330	23 32 24·8	43 30	19·5 20·0	23 47 15·9	
31 42	86 314 3·971	"	46 33	295 44·5 —	° ′ ″	
35 11	·917	1100·601	49 8	45·0 46·0	115 32 38	

	Victoria and — 7°·5183. (λ) (69)				
	° A B				
23 53 45	300 5·5 6·0	h m s			
55 56	7·5 8·0	23 59 55·5			
59 34	299 57·0 57·5	° ′ ″			
0 2 16	55·5 56·0	300 1 37			

Chronometer Slow.

	h m	m s		B	t	T
Run + 0r·016.	At 0 16	+ 2 2·8		h m	in.	°
	Losing 0s·4 hourly.		At	22 6	30·17	45·5 42·7
				0 5	30·12	47·2 45·7

The observation of — 6°·5360 before reversing the Position Circle (*i.e.* after No. 65) was inadvertently omitted.

Digitized by Google

1889, June 23. GILL.

Standard Stars. (70) (2)

Chronometer Time.	Readings of Scale or Position Circle. A / B	Cape Sid. Time. — Distance or P. Angle.
h m s	° ′ ″ ″	h m s
15 57 44	277 47 ; 7 19, 6 35	16 8 19·7
16 4 5	6 50, 6 17	° ′ ″
10 6	277 51 ; 1 23, 0 32	97 48 43
12 54	1 35, 0 40	

Standard Stars. (71)

Chronometer Time.	Readings of Scale or Position Circle. r	Cape Sid. Time. — Distance or P. Angle.
h m s		h m s
16 17 6	180 220 2·600	16 23 56·0
21 19	·470	″
23 14	19 381 2·041	6452·974
25 35	·120	

Victoria and — 6°·5360. (θ) (72)

Chronometer Time.	Readings of Scale or Position Circle. r	Cape Sid. Time. — Distance or P. Angle.
h m s		h m s
16 32 12	90 309 4·619	16 45 34·9
43 33	·155	″
47 40	109 291 4·517	741·101
50 24	·530	

Victoria and — 6°·5360. (θ) (73)

Chronometer Time.	Readings of Scale or Position Circle.	Cape Sid. Time. — Distance or P. Angle.
h m s		h m s
17 1 3	109 291 4·935	17 9 50·7
8 29	5·239	″
9 41	91 310 3·319	732·691
11 39	·252	
	Reversed Position Circle.	

Victoria and — 6°·5360. (θ) (74) (1)

Chronometer Time.	Readings of Scale or Position Circle. r	Cape Sid. Time. — Distance or P. Angle.
h m s		h m s
17 15 2	91 310 3·105	17 19 57·8
16 23	·058	″
19 56	109 291 5·619	729·009
[36 11	108 292 5·442]	

Victoria and — 6°·5360. (θ) (75)

Chronometer Time.	Readings of Scale or Position Circle.	Cape Sid. Time. — Distance or P. Angle.
h m s		h m s
17 43 32	91 310 2·119	17 51 30·7
47 0	·032	″
52 29	109 292 2·725	718·226
54 30	·811	

Victoria and — 6°·5360. (θ) (76)

Chronometer Time.	Readings of Scale or Position Circle. °	Cape Sid. Time. — Distance or P. Angle.
h m s	° ′ ′	h m s
17 55 46	98 32·5 32·0	18 1 10·8
58 22	25·5 25·0	° ′ ″
18 0 23	97 41·0 41·0	98 5 4
1 40	42·0 41·5	

Victoria and — 6°·5360. (θ) (77)

Chronometer Time.	Readings of Scale or Position Circle. °	Cape Sid. Time. — Distance or P. Angle.
h m s	° ′ ′	h m s
18 8 58	277 31·0 30·0	18 16 3·9
11 6	30·0 31·0	° ′ ″
16 55	53·0 52·0	97 41 15
18 44	52·0 51·0	

Standard Stars. (78) (2)

Chronometer Time.	Readings of Scale or Position Circle. ° ′ ″ ″	Cape Sid. Time. — Distance or P. Angle.
h m s		h m s
18 23 12	227 49 ; 9 57, 9 12	18 30 20·4
27 18	51 ; 0 55, 0 7	° ′ ″
29 30	227 47 ; 6 7, 5 18	97 47 46
32 49	6 29, 5 38	

Standard Stars. (79)

Chronometer Time.	Readings of Scale or Position Circle. r	Cape Sid. Time. — Distance or P. Angle.
h m s		h m s
18 35 39	19 381 2·074	18 39 14·5
36 38	·161	″
37 42	180 220 2·355	6453·927
38 26	·410	

Run + 0ᵈ·017.

Chronometer Slow.

	h m	m s
At	15 42	+ 2 7·3
Losing		0ˢ·3 hourly.

	h m	B in.	t °	T °
At	16 15	30·19	51·5	49·8
	18 40	30·19	51·3	49·5

There was considerable fog throughout the observations and occasional complete interruption by cloud. Images good and steady when visible, but always very faint and difficult.

(1) There is some inexplicable misreading in this observation. The only reasonable conclusion appears to be that in the observation at 17ʰ 36ᵐ 11ˢ the handle was touched before the micrometer was read. This observation is therefore rejected.

(2) A correction of — 12″ applied to the Position Angle mean for coincidence.

Digitized by Google

Chronometer Time.	Readings of Scale or Position Circle.	Cape Sid. Time. — Distance or P. Angle.	Chronometer Time.	Readings of Scale or Position Circle.	Cape Sid. Time. — Distance or P. Angle.
		1889, June 25. AUWERS.			
	Standard Stars. (80)			Standard Stars. (81)	
h m	Scale r	h m s	h m s	° ′ A ″ B ″	h m s
22 11 15	19 381 2·078	22 13 24·2	22 17 17	277 50 ; 0 18, 9 44	22 21 10·2
12 20	1·944	″	19 49	0 18, 9 30	° ′ ″
14 30	180 220 2·432	6453·142	22 49	277 46 ; 6 4, 4 58	97 47 33
15 42	·432		24 56	6 9, 4 53	
	Victoria and — 6°·5360. (θ) (82)			Victoria and — 6°·5360. (θ) (83)	
	° ′ ′	h m s		° ′ ′	h m s
22 33 58	83 313 2·410	22 37 23·4	22 42 52	166 21·5 20·5	22 46 20·8
36 42	·338	″	45 13	21·5 20·5	° ′ ″
38 24	112 289 1·930	964·687	47 43	165 45·5 44·5	346 2 15
40 40	·854		49 45	44·5 43·5	
	Victoria and — 6° 5360. (θ) (84)			Victoria and — 6°·5360. (θ) (85)	
	° ′ ′	h m s		r	h m s
22 52 44	345 47·0 45·5	22 55 51·5	23 1 17	112 288 5·010	23 4 2·0
54 42	44·0 43·0	° ′ ″	3·25	4·874	″
57 18	346 7·5 6·5	345 55 47	4·49	88 313 3·594	975·515
58 52	7·0 5·5		6·47	3·600	
	Standard Stars. (86)			Standard Stars. (87)	
	° ′ ′ ″ ′ ″	h m s			h m s
23 14 41	97 46 ; 5 15, 3 34	23 18 34·8	23 24 30	180 220 2·709	23 27 11·5
17 27	5 14, 3 42	° ′ ″	26 8	·766	″
20 3	97 50 ; 0 19, 9 33	97 46 56	28 2	19 381 1·857	6450·610
22 18	0 4, 9 13		29 37	·779	
			30 54	·759	

Run + 0ᵐ·015.
Coincidence of Position Micrometer (— 5′) A 0 ′ 14 ″ / B 0 9 } Corr. — 11″·5.

Chronometer Slow.*

h m	m s
At 23 49	— 0 2·4
Hourly rate	+ 0ˢ·1

	B	t	T
	n	°	°
At 22 0	30·25	53·4	53·8
23 33	30·24	53·7	54·0

Definition extremely bad I. 4, and, if possible, worse at the end. Second set scarcely measurable.

**Note.* The Chronometer was stopped by Gill on the 24th, and he corrected the rate by the screws of the balance. The rate after this became more regular (as well as much smaller), because the clerk was instructed not to tilt the Chronometer from its normal horizontal position, as he often previously was in the habit of doing for his own convenience. Marine Chronometers are not regulated to keep time in all positions—only in the horizontal position. After this, the change of Chronometer error during any series of observations may be neglected.

		1889, June 26. AUWERS.			
	Victoria and — 5°·5138. (ε) (88)			Victoria and — 7°·5183. (λ) (89)	
h m s	Scales r	h m s	h m s	Scales r	h m s
16 14 53	37 363 2·120	16 17 6·8	16 24 58	157 243 4·611	16 27 18·3
16 6	·036	″	26 33	·559	″
18 20	162 238 2·471	5009·445	28 19	43 358 3·966	4587·686
19 12	·605		29 27	·982	
				Reversed Position Circle.	

Digitized by Google

Chronometer Time.	Readings of Scale or Position Circle.	Cape Sid. Time. — Distance or P. Angle.	Chronometer Time.	Readings of Scale or Position Circle.	Cape Sid. Time. — Distance or P. Angle.
1889, June 26. AUWERS—*continued*.					
	Victoria and — 7°·5183. (λ) (90)			Victoria and — 5°·5138. (ε) (91)	
h m s	Scales r	h m s	h m s	Scales r	h m s
16 32 20	43 358 4·212	16 34 57·9	16 41 27	162 238 3·578	16 44 24·6
33 10	·158	"	43 45	·577	"
36 38	157 243 4·210	4591·106	45 43	37 362 4·849	4997·973
37 47	·022		46 47	·781	
	Victoria and — 5°·5138. (ε) (92)			Victoria and — 7°·5183. (λ) (93)	
16 47 59	37 362 4·728	h m s	16 56 42	157 243 3·198	h m s
49 11	·769	16 50 12·6	57 40	·181	16 58 49·4
51 14	162 238 3·987	"	59 56	42 357 5·564	"
52 30	4·026	4995·480	17 1 3	·514	4602·634
				Reversed Position Circle.	
	Victoria and — 7°·5183. (λ) (94)			Victoria and — 5°·5138. (ε) (95)	
17 3 13	42 357 5·630	h m s	17 12 36	162 238 4·777	h m s
4 25	·640	17 5 15·6	13 35	·946	17 14 51·6
6 14	157 243 2·688	"	15 54	38 363 3·573	"
7 14	·700	4605·613	17 25	·489	4985·031

Run + 0ᵐ·015.
Chronometer Correction — 0ᵐ 0ˢ·9.
Images pretty good (2–3) from 16ʰ 3ᵐ to 17ʰ 2ᵐ, but 3–4 at end.
By mistake the Stars — 5°·5138 and — 7°·5183 were observed in the evening instead of in the morning.

	B	t	T
h m	in.	°	°
At 15 55	30·30	57·2	57·6
17 20	30·31	57·6	58·2

Chronometer Time.	Readings of Scale or Position Circle.	Cape Sid. Time. — Distance or P. Angle.	Chronometer Time.	Readings of Scale or Position Circle.	Cape Sid. Time. — Distance or P. Angle.
1889, June 26. GILL.					
	Victoria and — 4°·5016. (ι) (96)			Victoria and — 8°·5205. (ζ) (97)	
h m s	Scale r	h m s	h m s	Scale r	h m s
22 10 15	183 217 2·704	22 14 4·1	22 25 34	31 369 5·769	22 28 17·1
12 24	·763	"	27 12	·729	"
15 29	16 383 5·752	6690·887	29 31	169 232 2·742	5528·101
18 11	·726		30 54	·718	
				Reversed Position Circle.	
	Victoria and — 8°·5205. (ζ) (98)				
22 33 39	169 232 2·570	h m s			
36 22	·593	22 37 46·8			
38 53	31 370 2·040	"			
42 16	·109	5530·384			

Digitized by Google

1889, June 26. GILL—*continued.*

Chronometer Time.	Readings of Scale or Position Circle.	Cape Sid. Time. — Distance or P. Angle.	Chronometer Time.	Readings of Scale or Position Circle.	Cape Sid. Time. — Distance or P. Angle.
	Victoria and — 4°·5016. (ι) (99) (1)			Victoria and — 4°·5016. (ι) (100) (1)	
h m s	Scale r	h m s	h m s	Scale r	h m s
22 52 19	16 383 4·987	23 2 39·1	23 20 7	183 217 4·058	23 25 2·2
56 10	5·021	"	24 23	3·979	"
23 5 58	183 217 3·679	6681·807	27 16	16 383 4·430	6677·572
16 12	·924		28 25	·330	

Run + 0r·020.

	B	t	T
h m	in.	°	°
At 22 5	30·30	57·8	59·5
23 32	30·34	58·6	60·2

Chronometer Correction — 0m 0s·7 ; rate insensible.
I. 3 ; S. 2–3, except in last observations of — 4°·5016, when the definition became very bad.
The above stars should have been observed in the evening and not in the morning ; the error inadvertently arose from a mistake in the preparation of the observing list for the night.
(1) To equalise the weights of the observations, Nos. 99 and 100 should be combined as one.

1889, June 27. GILL.

Chronometer Time.	Readings of Scale or Position Circle.	Cape Sid. Time. — Distance or P. Angle.	Chronometer Time.	Readings of Scale or Position Circle.	Cape Sid. Time. — Distance or P. Angle.
	Victoria and — 4°·5016. (ι) (101)			Victoria and — 8°·5205. (ζ) (102)	
h m s	Scale r	h m s	h m s	Scale r	h m s
16 11 36	181 220 2·729	16 17 23·2	16 40 8	28 373 2·564	16 43 18·2
13 54	·808	"	41 40	·680	"
19 11	19 381 5·643	6489·270	44 57	172 228 5·717	5778·304
24 49	·441		46 25	·618	
	Victoria and — 8°·5205. (ζ) (103)			Victoria and — 4°·5016. (ι) (104)	
16 51 58	172 228 5·664	16 54 52·0	17 3 48	19 381 5·016	17 7 16·2
53 47	·470	"	5 40	·032	"
55 21	28 373 2·977	5780·933	9 11	181 220 3·589	6482·781
58 19	3·111		10 23	·493	
	Victoria and — 4°·5016. (ι) (105)			Victoria and — 8°·5205. (ζ) (106)	
17 15 19	181 220 3·590	17 23 38·0	17 35 46	28 373 3·965	17 38 6·0
23 50	·735	"	37 8	4·007	"
26 13	19 381 4·845	6481·079	38 49	172 228 4·407	5791·542
29 7	·769		40 38	·391	
	Victoria and — 8°·5205. (ζ) (107)			Victoria and — 4°·5016. (ι) (108)	
17 45 17	172 228 4·310	17 49 0·6	17 57 47	19 381 4·466	18 3 7·2
47 58	·214	"	59 51	·272	"
49 39	28 373 4·386	5794·180	18 3 29	181 220 4·170	6476·067
53 3	·361		11 19	·272	

Run + 0r·013.

	B	t	T
h m	in.	°	°
At 16 5	30·28	59·0	58·5
18 15	30·29	57·5	56·9

Chronometer Correction + 0m 0s·8.
I. 2–3 ; S. 2–3
There is no note whatever about the quality of the definition in the original note book. It is assumed to be 2–3 both for I. and S. not only because there are no remarks as to specially good or specially bad conditions, but because Dr. Auwers a few hours afterwards notes the Images as 2–3.

Digitized by Google

Chronometer Time.	Readings of Scale or Position Circle.	Cape Sid. Time. / Distance or P. Angle.
1889, June 27. AUWERS.		
	Victoria and — 5°·5138. (ε) (109)	
h m s	Scale r	h m s
22 21 10	47 354 2·214	22 27 13·3
27 8	1·986	"
29 43	153 248 2·702	4247·074
30 47	·648	
	Victoria and — 7°·5183. (λ) (110)	
h m s	Scale r	h m s
22 37 20	168 233 5·127	22 39 56·3
38 40	·091	"
41 15	32 368 3·636	5425·415
42 28	·672	
	Reversed Position Circle.	
	Victoria and — 7°·5183. (λ) (111)	
22 47 31	32 368 4·012	h m s
48 27	3·996	22 49 30·0
50 26	167 232 4·481	"
51 34	·458	5430·432
	Victoria and — 5°·5138. (ε) (112)	
22 56 38	153 248 3·852	h m s
58 22	·920	22 59 41·3
23 1 8	47 353 4·570	"
2 2	·422	4233·087
3 8	·465	
	Victoria and — 5°·5138. (ε) (113)	
23 4 12	47 353 4·277	h m s
5 18	·264	23 6 31·5
7 45	153 248 4·281	"
8 49	·339	4229·762
	Victoria and — 7°·5183. (λ) (114)	
23 14 34	168 233 3·438	h m s
15 58	·270	23 17 16·8
16 40	·418	"
18 39	32 368 5·294	5442·546
19 33	·380	
	Reversed Position Circle.	
	Victoria and — 7°·5183. (λ) (115)	
23 22 5	32 368 5·464	h m s
23 39	·510	23 24 27·8
25 29	168 233 2·911	"
26 36	·881	5445·795
	Victoria and — 5°·5138. (ε) (116)	
23 30 41	153 248 5·348	h m s
31 42	·226	23 33 56·4
32 49	·379	"
34 47	47 353 3·006	4217·866
35 55	2·948	
36 56	·837	
37 56	·906	

I. 2–3; in last set 3–4.
Run + 0ᵐ·020.
Chronometer Correction + 0ᵐ 0ˢ·5.

	h m	B in.	t °	T °
At	22 9	30·27	54·6	55·3
	23 30	30·26	51·8	47·1

Chronometer Time.	Readings of Scale or Position Circle.	Cape Sid. Time. / Distance or P. Angle.
1889 June 28. AUWERS.		
	Victoria and — 5°·5144. (η) (117*)	
h m s	Scale r	Something wrong with first bisection. Apparently the moveable wire pointed first in mistake.
16 47 3	38 361 [4·104]	
48 25	39 362 3·561	
50 4	161 239 5·006	
50 56	·016	4904·232
	Victoria and — 8°·5205. (ζ) (117)	
h m s	Scale r	h m s
16 54 2	176 223 5·461	16 56 33·1
55 32	·500	"
57 48	23 377 3·226	6143·180
58 41	·224	
	Reversed Position Circle.	

Digitized by Google

Chronometer Time.	Readings of Scale or Position Circle.	Cape Sid. Time. — Distance or P. Angle.	Chronometer Time.	Readings of Scale or Position Circle.	Cape Sid. Time. — Distance or P. Angle.
1889, June 28. AUWERS—*continued.*					
	Victoria and — 8°·5205. (ζ) (118)			Victoria and — 5°·5144. (η) (119)	
h m s	Scales r	h m s	h m s	Scales r	h m s
17 1 12	23 377 3·359	17 3 0·1	17 7 6	161 239 5·453	17 9 2·3
2 11	·367	″	8 7	·567	″
3 46	176 223 5·105	6145·657	10 0	39 362 2·975	4898·783
4 42	·147		10 47	·979	
	Victoria and — 5°·5144. (η) (120)			Victoria and — 8°·5205. (ζ) (121)	
17 12 9	39 362 2·901	h m s	17 18 30	177 224 4·783	h m s
13 28	·880	17 14 16·8	19 24	·800	17 20 22·8
15 13	161 239 5·722	″	20 56	23 377 3·838	″
16 8	·757	4897·195	22 9	·862	6149·776
			22 55	·854	
				Reversed Position Circle.	
	Victoria and — 8°·5205. (ζ) (122)			Victoria and — 5°·5144. (η) (123)	
17 25 26	23 377 3·870	h m s	17 31 45	161 240 2·331	h m s
26 39	·937	17 27 21·6	32 48	·271	17 33 30·8
28 2	177 224 4·600	″	34 9	39 362 2·186	″
29 10	·536	6151·181	35 12	·180	4890·868

I. 2 ; S. 2.
Run + 0ˢ·014.
Chronometer Correction + 0ᵐ 2ˢ·3.

	B	t	T
h m	in.	°	°
At 16 30	30·28	52·2	47·8
17 38	30·27	51·4	47·4

1889, June 28. GILL.					
	Victoria and — 4°·4992. (γ) (124)			Victoria and — 7°·5183. (λ) (125)	
h m s	Scales r	h m s	h m s	Scales r	h m s
22 23 19	179 220 5·187	22 28 3·6	22 53 12	24 377 3·246	22 59 30·3
26 10	·099	″	58 49	·429	″
29 41	20 380 3·173	6384·652	23 1 50	176 224 4·959	6106·692
32 55	2·979		4 1	·791	
				Reversed Position Circle.	
	Victoria and — 7°·5183. (λ) (126)			Victoria and — 4°·4992. (γ) (127)	
23 8 25	176 224 4·695	h m s	23 24 30	20 379 4·662	h m s
13 39	·446	23 14 32·8	27 9	·445	23 28 13·1
16 54	23 376 4·241	″	29 23	179 221 3·994	″
19 4	·483	6113·426	31 41	4·068	6357·554

Digitized by Google

Chronometer Time.	Readings of Scale or Position Circle.	Cape Sid. Time. / Distance or P. Angle.	Chronometer Time.	Readings of Scale or Position Circle.	Cape Sid. Time. / Distance or P. Angle.
1889, June 28. GILL—*continued.*					
	Victoria and — 4°·4992. (γ) (128)			Victoria and — 7°·5183. (λ) (129)	
h m s	Scales r		h m s	Scales r	
23 32 59	179 221 4·199	h m s	23 43 49	23 376 5·370	h m s
34 53	·197	23 35 47·1	47 0	·531	23 48 44·6
37 2	21 380 4·208	"	51 28	176 224 2·786	"
38 5	·150	6354·842	52 32	·738	6128·018
	Victoria and — 7°·5183. (λ) (130)			Victoria and — 4°·4992. (γ) (131)	
23 53 18	176 224 2·646	h m s	0 1 15	21 380 3·001	h m s
54 17	·650	23 55 23·8	3 47	2·920	0 4 21·1
56 26	23 377 1·923	"	5 25	179 221 5·612	"
57 25	·961	6130·937	6 48	·759	6341·210

Run + 0ʳ·020.
I. 2–3 ; S. 2–3 ; but images faint.
Chronometer Correction + 0ᵐ 2ˢ·3.
After observation 129, the Position Circle should have been turned 180°, but this was inadvertently omitted.

	B	t	T
h m	in	°	°
At 22 15	30·24	50·7	48·7
0 10	30·24	48·5	45·2

Chronometer Time.	Readings of Scale or Position Circle.	Cape Sid. Time. / Distance or P. Angle.	Chronometer Time.	Readings of Scale or Position Circle.	Cape Sid. Time. / Distance or P. Angle.
1889, June 29. GILL.					
	Victoria and — 5°·5144. (η) (132)			Victoria and — 8°·5205. (ζ) (133)	
h m s	Scale r		h m s	Scale r	
16 45 4	156 244 5·820	h m s	16 53 44	18 382 2·680	h m s
47 13	·910	16 47 58·8	57 10	·724	16 57 53·3
49 13	44 357 2·578	"	58 47	181 218 5·784	"
50 17	·556	4493·994	17 1 44	·706	6540·179
	Victoria and — 8°·5205. (ζ) (134)			Victoria and — 5°·5144. (η) (135)	
17 2 46	181 218 5·680	h m s	17 14 18	44 357 1·950	h m s
4 20	·560	17 5 47·5	15 37	·886	17 17 11·3
6 49	18 382 2·991	"	17 44	156 245 2·654	"
9 7	3·053	6542·419	20 58	·752	4486·600
	Victoria and — 5°·5144. (η) (136)			Victoria and — 8°·5205. (ζ) (137)	
17 23 9	156 245 2·765	h m	17 32 11	18 382 3·745	h m s
24 19	·807	17 25 18·8	33 18	·713	17 35 55·8
26 19	44 356 5·679	"	38 21	182 219 4·622	"
27 20	·605	4484·866	39 45	·537	6551·182

Digitized by Google

Chronometer Time.	Readings of Scale or Position Circle.	Cape Sid. Time. — Distance or P. Angle.	Chronometer Time.	Readings of Scale or Position Circle.	Cape Sid. Time. — Distance or P. Angle.
	1889, June 29. GILL—*continued.*				
	Victoria and — 8°·5205. (ζ) (138)			Victoria and — 5°·5144. (η) (139)	
h m s	Scale r	h m s	h m s	Scale r	h m s
17 41 6	182 219 4·495	17 45 23·5	17 53 53	44 356 4·968	17 58 2·5
44 40	·393	"	55 39	·934	"
47 16	18 382 4·154	6554·131	18 0 19	156 245 3·690	4476·670
48 24	·204		2 11	·757	
I. 1–2 ; S. 1–2. Run + 0r·018. Chronometer Correction + 2s·0. The Position Circle was not reversed throughout the observations.				B t T h m in ° ° At 16 43 30·28 54·1 50·8 18 3 30·29 53·5 52·1	
	1889, June 29. AUWERS.				
	Victoria and — 4°·4992. (γ) (140)			Victoria and — 7°·5183. (λ) (141)	
h m s	Scale r	h m s	h m s	Scale r	h m s
22 22 47	27 373 3·026	22 24 52·6	22 33 3	184 216 2·368	22 36 21·1
24 1	2·838	"	34 2	·213	"
25 43	172 227 5·636	5820·008	34 45	·193	6777·585
26 51	·670		35 32	·204	
			37 36	15 385 2·564	
			38 29	·509	
			39 29	·577	
	Victoria and — 7°·5183. (λ) (142)			Victoria and — 4°·4992. (γ) (143)	
22 40 29	15 385 2·636	h m s	22 48 57	172 228 2·635	h m s
41 25	·625	22 42 35·2	50 28	·665	22 51 29·1
43 18	184 215 5·788	"	52 33	27 372 5·760	"
44 8	·693	6780·528	53 51	·651	5808·990
45 3	·709			Reversed Position Circle.	
	Victoria and — 4°·4992. (γ) (144)			Victoria and — 7°·5183. (λ) (145)	
22 56 23	27 372 5·682	h m s	23 4 2	184 215 4·800	h m s
57 20	·559	22 57 59·1	5 20	·626	23 7 59·4
58 38	172 228 2·958	"	6 15	·690	"
59 27	·985	5806·945	6 51	·670	6793·040
			9 39	15 385 4·064	
			10·56	·122	

Digitized by Google

Chronometer Time.	Readings of Scale or Position Circle.	Cape Sid. Time. / Distance or P. Angle.	Chronometer Time.	Readings of Scale or Position Circle.	Cape Sid. Time. / Distance or P. Angle.
1889, June 29. AUWERS—*continued*.					
	Victoria and — 7°·5183. (λ) (146)			Victoria and — 4°·4992. (γ) (147)	
h m s	Scale r		h m s	Scale r	
23 12 16	15 385 4·151	h m s	23 22 38	172 228 4·054	
13 28	·209	23 15 52·9	24 4	3·999	
15 22	·321	"	24 57	4·060	h m s
17 40	185 216 4·187	6796·324	26 1	·066	23 26 36·8
18 26	·170		27 32	27 372 4·444	"
			28 26	·367	5795·108
			29 8	·317	
			29 52	28 373 4·235	

I. and S. 2–3; sometimes 2.
Run + 0ᵉ·015.
Chronometer Correction + 2ˢ·1.

	h m	B in.	t °	T °
At	22 5	30·28	50·7	47·3
	23 32	30·28	50·8	48·0

Observations by Auwers till this date inclusive made as described on June 22. With June 30 a modification is introduced adding a systematic but limited number of reversals of the prism. This plan is to be formally adopted by Auwers in all his future observations of Victoria.

1889, June 30. AUWERS.

	Victoria and — 5°·5138. (ε) (148)			Victoria and — 6°·5339. (δ) (149)	
h m s	Scale r		h m s	Scale r	
16 43 21	65 336 2·176	h m s	16 50 59	128 272 3·655	h m s
44 48	·026	16 45 21·0	52 27	·547	16 53 0·6
46 8	135 266 2·601	"	53 45	71 328 5·082	"
47 0	·619	2804·030	54 45	·171	2273·038
				Rotated prism 90°.	
	Victoria and — 6°·5339. (δ) (150)			Victoria and — 5°·5138. (ε) (151)	
16 56 9	71 328 5·069	h m s	17 4 22	135 266 3·210	h m s
57 1	·085	16 57 46·1	6 2	·200	17 6 35·2
58 18	128 272 3·450	"	7 30	65 335 5·329	"
59 30	·392	2273·695	8 20	·256	2797·080
				Reversed Position Circle.	
	Victoria and — 5°·5138. (ε) (152)			Victoria and — 6°·5339. (δ) (153)	
17 12 13	65 335 5·230	h m s	17 19 52	128 272 3·146	h m s
13 21	·110	17 14 20·5	21 0	·159	17 21 41·7
15 16	135 266 3·448	"	22 11	71 328 5·454	"
16 25	·460	2795·206	23 37	·558	2277·208
				Rotated prism 90°.	

Digitized by Google

Chronometer Time.	Readings of Scale or Position Circle.	Cape Sid. Time. — Distance or P. Angle.	Chronometer Time.	Readings of Scale or Position Circle.	Cape Sid. Time. — Distance or P. Angle.
1889, June 30. AUWERS—*continued.*					
	Victoria and — 6°·5339. (δ) (154)			Victoria and — 5°·5138. (ε) (155)	
h m s	Scale r	h m s	h m s	Scale r	h m s
17 24 34	71 328 5·529	17 26 21·5	17 31 59	135 266 3·883	17 34 6·7
25 31	·513	"	33 15	·900	"
26 50	128 272 3·048	2277·966	34 55	65 335 4·541	2789·892
28 24	2·985		36 11	·562	
				B t T	
Run + 0r·017.			At	h m in ° °	
Chronometer Correction + 1s·7.				16 27 30·37 47·9 50·0	
I. 2, S. 2, stars (—5°·5138 with screen 2) rather faint till 17h 3m, then quite bright.				17 38 30·37 52·7 49·2	
1889, June 30. GILL.					
	Victoria and — 5°·5120. (γ) (156)			Victoria and — 6°·5360. (θ) (157)	
h m s	Scale r	h m s	h m s	Scale r	h m s
22 27 44	172 229 3·331	22 31 14·7	22 44 13	48 353 2·617	22 46 33·2
29 19	·407	"	45 30	·747	"
33 12	28 372 4·867	5760·794	47 29	152 248 5·666	4175·039
34 35	·770		48 52	·602	
	Victoria and — 6°·5360. (θ) (158)			Victoria and — 5°·5120. (γ) (159)	
22 50 10	152 248 5·613	h m s	23 5 16	28 372 3·247	h m s
54 35	·359	22 54 45·7	7 55	·053	23 8 57·2
56 15	48 353 3·259	"	10 22	171 228 5·564	"
57 54	·280	4178·741	12 7	·685	5741·036
				Reversed Position Circle.	
	Victoria and — 5°·5120. (γ) (160)			Victoria and — 6°·5360. (θ) (161)	
23 17 28	171 229 1·979	h m s	23 33 10	47 352 5·003	h m s
21 2	2·099	23 23 28·2	34 42	4·975	23 36 40·2
27 2	28 372 2·065	"	38 27	152 248 3·375	"
28 12	·023	5733·435	40 13	·192	4198·448
	Victoria and — 6°·5360. (θ) (162)			Victoria and — 5°·5120. (γ) (163)	
23 42 20	152 248 3·172	h m s	23 52 27	29 372 4·567	h m s
43 40	·074	23 44 41·7	53 57	·559	23 55 41·3
45 27	47 352 5·505	"	56 54	171 229 4·217	"
47 11	·538	4201·934	59 18	·338	5714·771
				B t T	
Run + 0r·016.			At	h m in. ° °	
Chronometer Correction + 2s·2.				22 25 30·33 51·5 49·8	
There is no note as to the definition, assumed I. 2–3 ; S. 2–3 (see Auwers notes a few hours before).				0 2 30·34 50·6 48·3	

Digitized by Google

Chronometer Time.	Readings of Scale or Position Circle.	Cape Sid. Time. — Distance or P. Angle.	Chronometer Time.	Readings of Scale or Position Circle.	Cape Sid. Time. — Distance or P. Angle.
1889, July 1. GILL.					
	Victoria and — 5°·5138. (ε) (164)			Victoria and — 6°·5339. (δ) (165)	
h m s	Scale r	h m s	h m s	Scale r	h m s
16 41 25	69 331 3·959	16 54 16·0	17 9 36	132 268 5·691	17 17 17·7
54 49	·817	"	16·10	·548	"
58 10	131 270 4·804	2460·974	18·30	68 333 3·050	2573·783
17 2 29	·868		24 44	·290	
	Victoria and — 6°·5339. (δ) (166)			Victoria and — 5°·5138. (ε) (167)	
17 27 19	68 333 3·220	h m s	18 38 9	130 270 2·347	h m s
32 2	·338	17 32 33·2	39 17	·329	18 40 46·6
34 44	132 268 4·990	"	41 11	69 331 2·096	"
35 57	5·002	2577·470	44 18	1·992	2444·207
	Clock line broke ; an hour lost in its repair.				
Run + 0ᵐ·016.				B t T	
Chronometer Correction + 2ᵐ·8.				h m in ° °	
Images generally 4, sometimes quite unobservable. Very unsatisfactory.			At 16 38	30·35 55·5 52·5	
			18 46	30·34 54·6 54·3	
1889, July 1. AUWERS.					
	Victoria and — 5°·5120. (γ) (168)			Victoria and — 6°·5360. (θ) (169)	
h m s	Scale r	h m s	h m s	Scale r	h m s
22 47 32	163 237 5·515	22 50 9·3	22 57 40	39 361 3·751	23 0 6·3
49 23	·600	"	58 36	·750	"
51 5	37 364 2·824	5057·946	23 1 20	161 240 4·662	4866·725
52 25	·748		2 37	·698	
				Rotated prism 90°.	
	Victoria and — 6°·5360. (θ) (170)			Victoria and — 5°·5120. (γ) (171)	
23 4 9	161 240 4·550	h m s	23 12 17	37 363 5·690	
5 14	·526	23 6 11·5	13 8	·831	h m s
7 10	39 361 4·050	"	13 56	·598	23 15 20·4
8 1	·066	4868·985	14 36	·649	"
			16 32	163 238 3·099	5044·598
			17 39	·187	
				Reversed Position Circle.	
	Victoria and — 5°·5120. (γ) (172)			Victoria and — 6°·5360. (θ) (173)	
23 20 18	163 238 3·308		23 31 19	39 361 5·140	h m s
21 28	·404	h m s	32 18	·262	23 33 15·4
24 4	37 363 5·100	23 23 16·1	34 4	161 240 3·205	"
24 57	4·968	"	35 8	·170	4881·520
26 6	·931	5039·867			
27 5	·859			Rotated prism 90°.	

Digitized by Google

Chronometer Time.	Readings of Scale or Position Circle.	Cape Sid. Time. — Distance or P. Angle.	Chronometer Time.	Readings of Scale or Position Circle.	Cape Sid. Time. — Distance or P. Angle.
	1889, July 1. AUWERS—*continued*.				
	Victoria and — 6°·5360. (θ) (174)			Victoria and — 5°·5120. (γ) (175)	
h m s	Scale r		h m s	Scale r	
23 36 3	160 240 3·119		23 47 9	37 363 3·813	
36 44	·041		48 43	·550	
38 28	39 361 5·533	h m s	50 37	·511	h m s
39 45	·611	23 38 27·3	51 56	·295	23 54 0·8
40 34	·629	"	55 12	162 237 5·211	"
42 52	·789	4884·270	57 8	·296	5022·231
			58 39	·538	
			59 50	·543	
			0 1 34	·740	

	B	t	T
	h m	n	°	°
At	22 8	30·32	52·9	50·0
	0 4	30·30	53·1	49·8

Run + 0ᵈ·012.
Chronometer Correction + 0ᵐ 3ˢ·0.
I. 3, S. 3, till 23ʰ 39ᵐ, stars rather faint, after this they got into thin clouds and became very faint, diffused and unsteady. Observations could only be begun 40ᵐ after first reading of the barometer, because the electric lamp illuminating the Position Circle was found broken and had to be replaced.

	1889, July 2. AUWERS.				
	Victoria and — 5°·5144. (η) (176)			Victoria and — 6°·5320. (α) (177)	
h m s	Scale r		h m s	Scale r	
16 36 36	148 251 5·132	h m s	16 48 55	53 347 5·014	h m s
38 56	·118	16 39 24·7	50 27	·028	16 50 59·7
40 28	51 349 3·423	"	51 54	147 254 3·570	"
41 28	·425	3900·640	52 32	·524	3756·320
				Rotated prism 90°.	
	Victoria and — 6°·5320. (α) (178)			Victoria and — 5°·5144. (η) (179)	
16 53 43	147 254 3·599	h m s	17 1 23	51 349 3·534	m s
54 39	·517	16 55 42·6	2 23	·504	17 2 57·2
55 16	·529	"	3 20	148 251 5·032	"
56 28	53 347 5·050	3756·162	4 32	·030	3901·590
57 31	4·957			Reversed Position Circle.	
	Victoria and — 5°·5144. (η) (180)			Victoria and — 6°·5320. (α) (181)	
17 6 55	148 251 4·998	h m s	17 13 30	53 347 4·781	h m s
7 50	5·074	17 8 34·5	14 43	·777	17 15 19·0
9 11	51 349 3·480	"	15 57	147 254 3·743	"
10 11	3·526	3901·485	16 55	·843	3753·866
				Rotated prism 90°.	

Digitized by Google

Chronometer Time.	Readings of Scale or Position Circle.	Cape Sid. Time. / Distance or P. Angle.	Chronometer Time.	Readings of Scale or Position Circle.	Cape Sid. Time. / Distance or P. Angle.
1889, July 2. AUWERS—*continued.*					
	Victoria and — 6°·5320. (*a*) (182)			Victoria and — 5°·5144. (*η*) (183)	
h m s	Scale r	h m s	h m s	Scale r	h m s
17 19 57	147 254 3·812	17 21 51·2	17 28 51	51 349 3·682	17 30 56·1
21 14	·790	"	29 43	·578	"
22 35	53 347 4·716	3753·489	30 24	·632	3902·576
23 28	·708		31 49	148* 251 4·973	
			32 50	·947	

	B	t	T
	h m in	°	°
Run + 0r·013.	At 16 19 30·33	60·9	55·6
Chronometer Correction + 2s·7.	17 35 30·30	58·8	53·4

Images variable, at the beginning scarcely 3, at the end 3, in the middle 2, and even better during a short interval.
Stars bright throughout.
* 149 in the original.

Chronometer Time.	Readings of Scale or Position Circle.	Cape Sid. Time. / Distance or P. Angle.	Chronometer Time.	Readings of Scale or Position Circle.	Cape Sid. Time. / Distance or P. Angle.
1889, July 2. GILL.					
	Victoria and — 5°·5120. (*γ*) (184)			Victoria and — 6°·5360. (*θ*) (185)	
h m s	Scale r	h m s	h m s	Scale r	h m s
22 37 19	45 355 2·177	22 41 5·4	22 47 51	169 231 4·154	22 54 11·0
39 57	·061	"	50 13	3·973	"
42 34	154 246 2·642	4367·299	55 50	30 369 4·743	5557·223
44 21	·768		58 19	·834	
			23 1 25	5·003	
	Victoria and — 6°·5360. (*θ*) (186)			Victoria and — 5°·5120. (*γ*) (187)	
23 5 10	30 369 5·174	23 10 59·9	23 19 30	154 246 4·467	23 22 35·6
9 46	·431	"	21 20	·730	"
12 49	169 231 2·954	5565·335	24 14	46 355 3·642	4345·353
16 4	·760		25 8	·627	
				Reversed Position Circle.	
	Victoria and — 5°·5120. (*γ*) (188)			Victoria and — 6°·5360. (*θ*) (189)	
23 28 35	46 355 3·538	23 31 12·6	23 39 3	169 230 5·710	23 42 22·6
29 59	·338	"	40 36	·847	"
31 41	154 246 5·245	4340·787	43 44	30 370 2·982	5579·395
34 25	·375		45 57	3·107	
	Victoria and — 6°·5360. (*θ*) (190)			Victoria and — 5°·5120. (*γ*) (191)	
23 49 50	30 370 3·347	23 53 32·1	0 4 9	154 247 3·115	0 8 46·6
51 8	·400	"	7 21	·407	"
55 5	170 231 5·046	5584·805	10 47	46 354 5·119	4319·135
57 55	·012		12 39	4·999	

	B	t	T
	h m in.	°	°
Run + 0r·014.	At 22 35 30·22	56·8	56·0
Chronometer Correction + 2s·6.	0 15 30·23	59·5	61·2

I. 3, S. 3, until 23h 26m; after that I. 3-4, S. 3-4.

Digitized by Google

Chronometer Time.	Readings of Scale or Position Circle.	Cape Sid. Time. / Distance or P. Angle.	Chronometer Time.	Readings of Scale or Position Circle.	Cape Sid. Time. / Distance or P. Angle.
1889, July 3. AUWERS.					
	Victoria and $-14°\cdot4984$. (β) (192)			Victoria and $-6°\cdot5339$. (δ) (193)	
h m s	Scale r		h m s	Scale r	h m s
22 21 42	151 248 4·220		22 30 31	54 345 4·426	22 32 46·2
23 3	·251	h m s	32 1	·428	"
24 56	48 352 4·120	22 24 1·2	33 23	145 255 3·976	3631·096
26 9	·128	"	34 55	·878	
		4149·208		Rotated prism 90°.	
	Victoria and $-6°\cdot5339$. (δ) (194)			Victoria and $-4°\cdot4984$. (β) (195)	
22 36 19	145 255 3·901	h m s	22 43 36	48 52 3·421	h m s
37 16	·811	22 38 21·2	45 13	·318	22 46 39·5
39 1	54 345 4·739	"	46 7	·210	"
40 34	·767	3633·095	47 55	151 248 5·244	4139·908
			49 12	·360	
				Reversed Position Circle.	
	Victoria and $-4°\cdot4984$. (β) (196)			Victoria and $-6°\cdot5339$. (δ) (197)	
22 52 17	151 248 5·490	h m s	23 1 12	54 345 5·605	h m s
53 39	·576	22 54 49·0	2 8	·631	23 2 57·2
55 41	48 352 2·940	"	3 28	145 255 2·900	"
57 24	·846	4136·485	4 46	·814	3642·473
				Rotated prism 90°.	
	Victoria and $-6°\cdot5339$. (δ) (198)			Victoria and $-4°\cdot4984$. (β) (199)	
23 6 0	145 255 2·700	h m s	23 16 51	48 352 2·080	h m s
7 25	·659	23 9 9·5	17 55	1·978	23 18 57·0
10 17	54 346 1·949	"	19 43	151 249 2·532	"
12 41	·979	3645·023	21 4	·636	4126·916

Run + 0r·016.
Chronometer Slow + 3s·7.

	h m	B in.	t °	T °
At	22 3	30·37	51·6	46·7
	23 23	30·35	49·4	45·9

Slight fog. Stars rather faint till 22h 50m and very faint afterwards; only after 23h 15m stars bright. I. 3, S. 3, sometimes 2–3 in first set, then 3-4 till 23h 15m, at last 2-3.

Chronometer Time.	Readings of Scale or Position Circle.	Cape Sid. Time. / Distance or P. Angle.	Chronometer Time.	Readings of Scale or Position Circle.	Cape Sid. Time. / Distance or P. Angle.
1889, July 4. AUWERS.					
	Victoria and $-4°\cdot4992$. (γ) (200)			Victoria and $-6°\cdot5320$ (α) (201)	
h m s	Scale r		h m s	Scale r	h m s
16 38 31	149 251 3·218	h m s	16 44 58	53 347 3·064	16 47 20·6
39 15	·228	16 40 6·1	46 2	2·952	"
40 42	50 349 5·275	"	46 41	3·002	3736·443
41 34	·275	3959·638	48 18	146 253 5·526	
			49 22	·467	
				Rotated prism 90°.	

Digitized by Google

Chronometer Time.	Readings of Scale or Position Circle.	Cape Sid. Time. / Distance or P. Angle.	Chronometer Time.	Readings of Scale or Position Circle.	Cape Sid. Time. / Distance or P. Angle.
	1889 July 4. AUWERS—*continued.*				
	Victoria and — 6°·5320. (*a*) (202)			Victoria and — 4°·4992. (γ) (203)	
h m s	Scale r		h m s	Scale r	
16 50 35	146 253 5·289	h m s	16 56 22	50 349 5·210	h m s
51 45	·405	16 52 38·5	57 12	·144	16 57 54·0
53 5	53 347 3·129	"	58 25	149 251 3·488	"
54 46	·179	3737·868	59 14	·407	3958·011
				Reversed Position Circle.	
	Victoria and — 4°·4992. (γ) (204)			Victoria and — 6°·5320. (*a*) (205)	
17 1 36	149 251 3·361	h m s	17 9 35	53 347 3·320	h m s
2 34	·401	17 3 39·0	10 32	·260	17 11 21·7
4 26	50 349 5·137	"	11 59	147 254 5·253	"
5 37	·119	3958·102	12 58	·217	3739·128
				Rotated prism 90°.	
	Victoria and — 6°·5320. (*a*) (206)			Victoria and — 4°·4992. (γ) (207)	
17 13 59	147 254 5·259	h m s	17 22 10 }	50 349 4·979	
14 49	·269	17 16 1·5	23 19 }	·999	h m s
16 48	53 347 3·278	"	24 17 }	5·053	17 24 51·0
18 7	·348	3739·097	25 49	149 251 3·519	"
			27 14	·579	3956·628

Run + 0ᵈ·013.
Chronometer Correction + 5ˢ·7.
I. 3, S. 3 in first set ; I. 2, S. 2 in second set. Easy observations.

	B	t	T
h m	in.	°	°
At 16 24	30·38	60·2	59·8
17 29	30·35	59·8	58·4

	1889, July 4. GILL.				
	Victoria and — 4°·4982.(1) (208)			Victoria and — 6°·5339. (δ) (209)	
h m s	Scale r		h m s	Scale r	
22 17 43	146 254 3·567	h m s	22 34 3	47 353 2·254	h m s
21 46	·683	22 22 53·2	38 39	·420	22 40 16·2
24 31	53 346 4·620	"	43 6	152 247 5·708	"
27 9	·590	3713·697	44 53	·643	4213·153
	Victoria and — 6°·5339. (δ) (210)			Victoria and — 4°·4982.(1) (211)	
22 46 17	152 247 5·583	h m s	22 58 34	54 347 3·413	h m s
47 12	·584	22 48 55·4	23 0 25	·385	23 2 29·4
49 0	47 353 2·996	"	4 49	146 254 5·204	"
52 49	3·162	4217·343	5 46	·238	3699·641
				Reversed Position Circle.	

Digitized by Google

1889, July 4. GILL—*continued.*

Victoria and — 4°·4982.(1) (212)

Chronometer Time.	Readings of Scale or Position Circle.	Cape Sid. Time. — Distance or P. Angle.
h m s	Scale r	h m s
23 8 15	146 254 5·365	23 19 14·2
19 25	·699	"
22 55	54 347 2·582	3693·509
25 58	·397	

Victoria and — 6°·5339. (δ) (213)

Chronometer Time.	Readings of Scale or Position Circle.	Cape Sid. Time. — Distance or P. Angle.
h m s	Scale r	h m s
23 30 38	47 353 4·748	23 33 51·7
32 29	·810	"
35 13	153 248 3·633	4235·789
36 43	·605	

Victoria and — 6°·5339. (δ) (214)

Chronometer Time.	Readings of Scale or Position Circle.	Cape Sid. Time. — Distance or P. Angle.
h m s		h m s
23 38 37	153 248 3·529	23 40 48·8
40 3	·431	"
41 32	47 353 5·099	4238·235
42 39	·155	

Victoria and — 4°·4982.(1) (215)

Chronometer Time.	Readings of Scale or Position Circle.	Cape Sid. Time. — Distance or P. Angle.
h m s		h m s
23 47 12	54 346 5·690	23 49 54·5
49 13	·484	"
50 39	146 255 2·992	3681·358
52 10	3·136	

	B	t	T
	h m	in.	°
At	22 15	30·32	54·0 48·8
	23 54	30·328*	51·2 45·7

Run + 0ᵐ·010.
Chronometer Correction + 5ˢ·9.
I. 2, S. 2. Stars sometimes very faint, especially in beginning of second set. But on the whole the observations very satisfactory.
(1) The star — 4°·4982 was observed in mistake for — 4°·4984.
* In the original note book the Barometer reading at 23ʰ 54ᵐ is entered 30ⁱⁿ·238, but it seems very improbable that the Barometer reading would change so much in less than 3ʰ. The corresponding Mean Time is about 5 a.m.; at the following 8 a.m. the Barometer reading (from the routine Meteorological Observations) was 30ⁱⁿ·302; it is therefore all but impossible that the true reading at 23ʰ 54ᵐ Sidereal Time was 30ⁱⁿ·238, and it is most probable that a not uncommon clerical error was made. 30ⁱⁿ·328 is therefore adopted.

1889, July 5. GILL

Standard Stars. (216)

Chronometer Time.	Readings of Scale or Position Circle.	Cape Sid. Time. — Distance or P. Angle.
h m s	Estimated A B	h m s
16 39 33	° ′ ′ ″ ′ ″	19 47 5·2
42 46	97 50·5 ; 0 59, 0 9	° ′ ″
48 19	50·5 ; 1 22, 0 39	97 48 20
57 11	46·5 ; 6 52, 6 0	
	46·5 ; 6 18, 5 30	

Standard Stars. (217)

Chronometer Time.	Readings of Scale or Position Circle.	Cape Sid. Time. — Distance or P. Angle.
h m s	Scale r	h m s
16 59 40	19 381 2·060	17 3 43·4
17 1 54	·071	"
4 55	180 220 2·386	6453·712
7 53	·360	

Victoria and — 5°·5124. (z) (218)

Chronometer Time.	Readings of Scale or Position Circle.	Cape Sid. Time. — Distance or P. Angle.
h m s	° ′ ′	h m s
17 15 32	113 47·5 47·0	17 18 59·1
17 21	47·5 47·0	° ′ ″
20 30	12·5 12·0	113 29 39
22 2	12·0 11·5	

Victoria and — 5°·5124. (z) (219)

Chronometer Time.	Readings of Scale or Position Circle.	Cape Sid. Time. — Distance or P. Angle.
h m s	° ′ ′	h m s
17 25 45	113 10·5 10·0	17 35 17·1
34 0	9·0 8·5	° ′ ″
35 45	47·0 46·0	113 27 15
45 7	44·0 43·0	

Reversed Position Circle.

Victoria and — 5°·5124. (z) (220)

Chronometer Time.	Readings of Scale or Position Circle.	Cape Sid. Time. — Distance or P. Angle.
h m s	Scale r	h m s
17 50 56	293 44·5 44·0	17 54 29·6
52 22	41·0 40·0	° ′ ″
55 32	10·5 9·5	113 27 34
58 37	16·0 15·0	

Victoria and — 5°·5124. (z) (221)

Chronometer Time.	Readings of Scale or Position Circle.	Cape Sid. Time. — Distance or P. Angle.
h m s	Scale r	h m s
18 1 57	293 17·0 16·5	18 6 31·6
4 27	9·0 8·5	° ′ ″
8·32	41·5 40·5	113 26 56
10·39	41·5 41·0	

Digitized by Google

Chronometer Time.	Readings of Scale or Position Circle.	Cape Sid. Time. — Distance or P. Angle.
1889, July 5. GILL—*continued*.		
	Victoria and — 5°·5124. (z) (222)	
h m s	Scale r	h m s
18 14 44	110 291 2·726	18 18 24·1
17 30	·927	"
19 11	90 310 5·609	795·136
21 40	·336	
	Cleaned the object glass.	
	Victoria and — 5°·5124. (z) (224)	
18 29 54	110 291 3·595	h m s
30 45	·558	18 31 38·6
32 0	90 310 4·817	"
33 24	·878	788·218
	Standard Stars. (226)	
18 45 22	180 220 2·394	h m s
46 29	·399	18 47 19·6
47 44 }	19 381 2·152 }	"
48 46 }	·216 }	6454·111
49 38 }	·152 }	

Run + 0r·015.
Chronometer Correction + 7s·8.
Correction for coincidence in Position Angles when the Micrometers are used, viz. (216) — 8″·5.
I. and S. 2, and sometimes 1–2, but much haze.
O.G. forged. Observations though slow were very satisfactory.

Chronometer Time.	Readings of Scale or Position Circle.	Cape Sid. Time. — Distance or P. Angle.
	Victoria and — 5°·5124. (z) (223)	
h m s	Scale r	h m s
18 26 15	90 310 5·070	18 27 37·8
27 7	·065	"
27 51	110 291 3·531	789·708
28 47	·470	
	Victoria and — 5°·5124. (z) (225)	
18 35 16	90 310 4·727	h m s
36 24	·621	18 38 1·8
38 39	110 291 4·039	"
41 17	109 290 4·205	784·618

	B	t	T
	h m	in.	° °
At	16 36	30·24	54·1 48·0
	18 51	30·21	53·8 49·5

1889, July 5. AUWERS.

Chronometer Time.	Readings of Scale or Position Circle.	Cape Sid. Time. — Distance or P. Angle.
	Victoria and — 5°·5124. (z) (227)	
	A B*	
h m s	° ′ ′	
22 44 0	292 43·0 41·0	h m s
45 53	28·5 28·0	22 47 11·5
47 37	36·5 36·0	° ′ ″
50 44	45·0 44·5	112 37 49
	Cleaned object glass.	
	Victoria and — 5°·5124. (z) (229)	
23 5 2	113 25·5 24·0	h m s
6 49	21·0 20·5	23 7 47·3
8 14	27·0 26·0	° ′ ″
10 32	28·0 27·0	113 24 52
	Cleaned object glass.	

Chronometer Time.	Readings of Scale or Position Circle.	Cape Sid. Time. — Distance or P. Angle.
	Victoria and — 5°·5124. (z) (228)	
	A B	
h m s	° ′ ′	
22 57 50	293 33·0 31·5	h m s
59 34	29·0 28·0	23 0 15·0
23 0 54	29·5 29·0	° ′ ″
2 10	26·5 25·5	113 29 0
	Rotated prism 90° and reversed Position Circle.	
	Victoria and — 5°·5124. (z) (230)	
23 22 57	112 36·0 35·5	h m s
24 24	36·5 36·0	23 25 35·5
26 11	37·0 36·0	° ′ ″
28 18	36·0 35·5	112 36 4
	Cleaned object glass thoroughly.	

Digitized by Google

1889, July 5. AUWERS—*continued.*

Victoria and — 5°·5124. (z) (231)

Chronometer Time.	Readings of Scale or Position Circle. A	B	Cape Sid. Time. Distance or P. Angle.
h m s	° ′	′	h m s
23 41 33	92 308	4·040	23 43 11·5
42 35		3·888	"
43 33	107 292	4·667	617·883
44 33		·672	

Rotated prism 90°.

Victoria and — 5°·5124. (z) (232)

Chronometer Time.	Readings of Scale or Position Circle. A	B	Cape Sid. Time. Distance or P. Angle.
h m s	° ′	′	h m s
23 46 54	107 292	4·840	23 49 37·3
48 59		·955	"
50 21	92 308	3·500	614·048
51 43		·360	

Reversed Position Circle.

Victoria and — 5°·5124. (z) (233)

Chronometer Time.	Readings of Scale or Position Circle.		Cape Sid. Time. Distance or P. Angle.
h m s	° ′	′	h m s
23 54 9	92 308	3·295	23 56 43·8
56 16		·170	"
57 28	107 292	5·413	610·469
58 30		·409	

Rotated prism 90°.

Victoria and — 5°·5124. (z) (234)

Chronometer Time.	Readings of Scale or Position Circle.		Cape Sid. Time. Distance or P. Angle.
h m s	° ′	′	h m s
23 59 59	107 292	5·521	0 2 19·3
0 1 24		·660	"
2 59	92 308	2·811	607·293
4 23		·750	

Standard Stars. (235*s*)

Chronometer Time.	Readings of Scale or Position Circle.		Cape Sid. Time. Distance or P. Angle.
h m s	° ′	′	h m s
0 10 38	19 380	5·196	0 19 39·9
11 42		·386	"
13 19		·198	6443·152
14 9		·098	
24 36	180 220	3·537	
25 44		·675	
27 26		·684	
28 41		·661	

Standard Stars. (235*p*)

Chronometer Time.	Readings of Scale or Position Circle.		Cape Sid. Time. Distance or P. Angle.
h m s	° ′	″	h m s
0 15 19	277 43·5	43·0	0 19 43·8
16 38	42·5	41·5	° ′ ″
17 47	43·5	42·5	277 44 45
18 49	43·0	42·5	
20 27	48·5	47·0	
21 27	47·0	46·5	
22 49	46·5	46·0	
23 30	47·0	45·5	

Index B could only be guessed. Micrometer could not therefore be used; the Position Circle was dewed.

	h m	B in.	t °	T °
At	22 12	30·19	52·7	55·3
	0 30	30·19	53·5	50·0

Run + 0ᵐ·016.
Chronometer Correction + 8ˢ·0.
* Micrometers A and B according to Gill's notation from here. The Microscopes bear no distinguishing marks. I always noted the left hand Micrometer in the first column under the heading Micrometer A, which accords with Gill's notation for telescope E.
Victoria and comparison stars appeared like faint diffused ghosts: found the object glass heavily dewed, and cleaned it; stars then tolerably visible but soon very faint again; first observations of P.A. very difficult and uncertain, after cleaning object glass at $22^h\ 9^m$ a little better.
I. 4, S. 3. For distance I. and S. 3. Foggy at beginning, very clear at end.

1889, July 8. AUWERS.

Victoria and — 5°·5120. (y) (236)

Chronometer Time.	Readings of Scale or Position Circle. Scale	r	Cape Sid. Time. Distance or P. Angle.
h m s			h m s
16 43 35	117 282	4·335	16 45 43·3
44 52		·377	"
46 28	82 318	4·263	1422·862
47 59		·241	

Victoria and — 5°·5124. (z) (237)

Chronometer Time.	Readings of Scale or Position Circle. Scale	r	Cape Sid. Time. Distance or P. Angle.
h m			h m s
16 52 10	82 318	2·816	16 54 24·1
53 40		·822	"
55 3	117 282	5·643	1409·269
56 4		·607	

Digitized by Google

1889, July 8. AUWERS—*continued.*

Chronometer Time.	Readings of Scale or Position Circle.	Cape Sid. Time. — Distance or P. Angle.
	Victoria and — 5°·5099. (x) (238)	
h m s	Scale r	h m s
17 0 10	125 275 5·517	17 2 17·1
1 35	·545	"
2 53	75 326 2·870	2011·344
3 51	·898	
	Rotated prism 90°.	
	Victoria and — 5°·5124. (z) (240)	
17 11 20	117 282 4·747	h m s
12 38	·698	17 13 22·8
13 59	82 318 4·010	"
14 55	·076	1419·969
	Victoria and — 5°·5120. (y) (242)	
17 24 17	117 282 3·960	h m s
25 36	·908	17 26 9·8
26 39	82 318 4·706	"
27 28	·622	1427·057
	Victoria and — 5°·5099. (x) (244)	
17 37 49	124 275 3·390	h m s
38 47	·392	17 39 43·6
40 6	75 325 5·013	"
41 33	4·940	1992·505
	Rotated prism 90°.	
	Victoria and — 5°·5124. (z) (246)	
17 49 41	118 283 2·602	h m s
50 49	·600	17 51 34·1
52 7	82 319 2·093	"
53 0	·130	1440·918

Chronometer Time.	Readings of Scale or Position Circle.	Cape Sid. Time. — Distance or P. Angle.
	Victoria and — 5°·5099. (x) (239)	
h m s	Scale r	h m s
17 5 35	75 326 2·887	17 7 21·3
6 41	·815	"
7 53	125 276 1·920	2009·450
8 37	·877	
	Victoria and — 5°·5120. (y) (241)	
17 17 33	82 318 4·616	h m s
18 40	·606	17 19 40·3
20 24	118 283 4·009	"
21 25	3·990	1426·465
	Reversed Position Circle.	
	Victoria and — 5°·5124. (z) (243)	
17 30 0	82 318 4·830	h m s
30 56	·842	17 32 14·4
32 52 }	117 282 3·570 }	"
34 8 }	·417 }	1430·057
34 53	·481 }	
	Victoria and — 5°·5099. (x) (245)	
17 42 45	75 325 4·917	h m s
44 12	·809	17 45 6·1
45 56	125 276 3·756	"
46 52	·827	1989·969
	Victoria and — 5°·5120. (y) (247)	
17 55 36	82 318 5·039	h m s
57 6	·058	17 57 38·1
58 6	118 283 3·500	"
59 5	117 282 3·558	1431·028

Run + 0ᵐ·015.
Chronometer Correction + 9ˢ·8.
I. 2 ; S. 2, but soon worse, generally 3 from 17ʰ 30ᵐ, at the end better again. Clear, and stars bright.

	B	t	T
	in	°	°
At 16 13	30·15	52·5	48·6
18 2	30·12	50·7	48·0

Digitized by Google

Chronometer Time.	Readings of Scale or Position Circle.	Cape Sid. Time. — Distance or P. Angle.	Chronometer Time.	Readings of Scale or Position Circle.	Cape Sid. Time. — Distance or P. Angle.
		1889. July 10. AUWERS.			
	Victoria and — 5°·5099. (x) (248)			Victoria and — 5°·5099. (x) (249)	
h m s	Scale r	h m s	h m s	Scale r	h m s
16 14 0	110 290 4·369	16 16 19·6	16 19 7	89 310 4·167	16 21 34·6
15 30	·357	"	20 34	·120	"
16 40	89 310 4·134	820·807	22 25	110 290 4·557	820·043
18 13	·140		23 17	·485	
	Rotated prism 90°.				
	Victoria and — 5°·5099. (x) (250)			Victoria and — 5°·5099. (x) (251)	
16 25 23	110 290 4·624	h m s	16 28 53	89 310 3·905	
26 12	·626	16 26 48·8	29 55	·829	h m s
26 56	89 310 3·888	"	31 3	110 290 4·858	16 31 0·1
27 49	·906	818·281	31 50	·704	"
	Rotated prism 90°.		32 35	·791	817·308
			33 6	·801	
	Standard Stars. (252)			Standard Stars. (253)	
16 37 46	180 220 2·379		16 52 10	19 381 2·057	
39 22	·375		53 17	·027	
Rotated prism.				Rotated prism.	
40 50	·411		55 16	·061	
41 34	·439		56 48	·180	h m s
43 27	19 381 2·011	h m s	58 13	·065	16 58 12·2
44 12	1·963	16 42 55·3	17 0 0	180 220 2·458	"
Rotated prism.		"	1 0	·459	6453·398
45 48	2·085	6453·433		Rotated prism.	
46 43	·159		1 51	·389	
47 35	·050		2 42	·442	
48 36	·059				
	Reversed Position Circle.				
	Victoria and — 5°·5099. (x) (254)			Victoria and — 5°·5099. (x) (255)	
17 12 54	110 290 5·808	h m s	17 16 34	90 311 2·693	h m
14 10	·840	17 14 41·4	17 23	·607	17 18 7·6
14 58	90 311 2·723	"	18 28	110 291 2·007	"
15 48	·611	806·003	19 10	·023	805·034
	Rotated prism 90°.				
	Victoria and — 5°·5099. (x) (256)			Victoria and — 5°·5099. (x) (257)	
17 20 35	110 291 2·021	h m s	17 25 6	90 311 2·467	
21 29	·067	17 22 22·6	26 3	·407	h m s
22 50	90 311 2·549	"	27 20	110 291 2·219	17 27 28·8
23 41	·459	804·154	28 4	·274	"
	Rotated prism 90°.		29 43	·249	802·636
			30 35	·370	

Digitized by Google

1889, July 10. AUWERS—*continued.*

Victoria and — 5°·5099. (x) (258)

Chronometer Time.	Readings of Scale or Position Circle.	Cape Sid. Time. — Distance or P. Angle.
h m s	Scale r	h m s
17 32 23	110 291 2·360	17 33 47·6
33 7	·350	"
34 5	90 311 2·238	801·155
34 40	·200	

Rotated prism 90°.

Victoria and — 5°·5099. (x) (259)

Chronometer Time.	Readings of Scale or Position Circle.	Cape Sid. Time. — Distance or P. Angle.
h m s	Scale r	h m s
17 35 43	90 311 2·190	17 37 26·3
36 31	·174	"
37 39	110 291 2·486	800·249
38 57	·510	

	B	t	T
	h m	in.	°	°
At	16 2	30·215	50·0	46·0
	17 5			45·5
	17 41	30·24	48·3	45·0

Run + 0r·016.
Chronometer Correction + 13s·8.
I. 2. ; S. 2 in first set of — 5°·5099 ; I. 2, S. 3 in first set of Standard stars. From 16h 5cm to 17h 3m measured through clouds, some pointings rather uncertain ; I. 3. The second set of — 5°·5099 was impaired by clouds and observed rather in a hurry ; I. 3. Therefore, an additional half set was measured after 17h 30m when it had again become pretty clear ; I. 2–3.

1889 July 10. GILL.

Victoria and — 5°·5099. (x) (260)

Chronometer Time.	Position Circle.	Cape Sid. Time. — Distance or P. Angle.
h m s	° ′ ′	h m s
0 1 24	209 43·5 43·0	0 3 44·4
2 48	43·5 42·5	° ′ ″
4 26	0·5 0·0	29 22 19
5 24	3·0 2·5	

Rotated prism 90°.

Victoria and — 5°·5099. (x) (261)

Chronometer Time.	Position Circle.	Cape Sid. Time. — Distance or P. Angle.
h m s	° ′ ′	h m s
0 7 25	208 57·0 56·5	0 10 41·2
9 26	51·5 51·0	° ′ ″
11 41	209 19·0 18·0	29 6 10
13 17	18·5 [17·75]	

	B	t	T
	h m	in.	°	°
At	0 0	30·236	46·5	44·2
	0 18	30·23	46·0	44·3

Chronometer Correction + 13s·9.
The images were good ; the above observations secured during a brief opening in the clouds.

1889, July 11. AUWERS.

Victoria and — 5°·5099. (x) (262)

Chronometer Time.	Readings of Scale or Position Circle.	Cape Sid. Time. — Distance or P. Angle.
h m s	Scale r	h m s
22 47 24	88 312 2·780	22 49 29·3
48 50	·821	"
49 43	111 288 5·761	927·385
51 1	·703	

Rotated prism 90°.

Victoria and — 5°·5099. (x) (263)

Chronometer Time.	Readings of Scale or Position Circle.	Cape Sid. Time. — Distance or P. Angle.
h m s	Scale r	h m s
22 54 2	111 288 5·555	22 56 19·6
54 59	·521	"
55 52	·538	929·818
56 59	88 312 3·052	
57 53	·136	

Victoria and — 4°·4960. (w) (264)

Chronometer Time.	Readings of Scale or Position Circle.	Cape Sid. Time. — Distance or P. Angle.
h m s	Scale r	h m s
23 1 26	88 313 2·778	23 10 17·3
7 25	·582	"
15 14	112 289 2·383	963·800
16 5	·367	

Rotated prism 90°.

Victoria and — 4°·4960. (w) (265)

Chronometer Time.	Readings of Scale or Position Circle.	Cape Sid. Time. — Distance or P. Angle.
h m s	Scale r	h m s
23 17 59	112 289 2·432	23 27 33·2
19 55	·571	"
21 30	88 313 1·956	956·580
39 14	312 5·118	
40 32	·157	
41 23	·201	

Reversed Position Circle.

Digitized by Google

Chronometer Time.	Readings of Scale or Position Circle.	Cape Sid. Time. — Distance or P. Angle.

1889, July 11. AUWERS—*continued.*

Victoria and — 4°·4960. (w) (266)

Chronometer Time.	Readings of Scale or Position Circle.	Cape Sid. Time. — Distance or P. Angle.
h m s	Scale r	h m s
23 44 54	88 312 4·965	23 47 5·1
45 49	·910	"
47 46	111 288 3·700	948·539
48 52	·642	
	Rotated prism 90°.	

Victoria and — 4°·4960. (w) (267)

Chronometer Time.	Readings of Scale or Position Circle.	Cape Sid. Time. — Distance or P. Angle.
h m s	Scale r	
23 50 33	111 288 3·811	
51 12	·679	h m s
52 27	88 312 4·719	23 52 47·7
53 30	·637	"
54 38	·620	946·584
56 18	·516	

Victoria and — 5°·5099. (x) (268)

Chronometer Time.	Readings of Scale or Position Circle.	Cape Sid. Time. — Distance or P. Angle.
0 19 40	88 313 1·977	h m s
21 15	·918	0 22 5·1
22 46	112 289 2·610	"
23 40	·423 *	959·394

* Very faint and diffused.

Victoria and — 5°·5099. (x) (269)

Chronometer Time.	Readings of Scale or Position Circle.	Cape Sid. Time. — Distance or P. Angle.
0 27 52	112 289 2·370	faint.
28 32	·292	faint; diffused.
34 10	88 313 2·456	
37 35	·522	h m s
38 34	·558	0 33 2·3
39 13	·595	"
		963·280

Run + 0ᵈ·022.
Chronometer Correction + 14ᵐ. 8ˢ.
Generally difficult, and often rather hurried observations between clouds, often interrupted. I. and S. 2 only to 23ʰ, then generally 3, and sometimes 4, with great faintness of planet.

	B	t	T
h m	in.	°	°
At 22 31	30·215	52·8	53·9
0 42	30·21	53·6	52·2

1889, July 13. AUWERS.

Victoria and — 4°·4960. (w) (270)

Chronometer Time.	Readings of Scale or Position Circle.	Cape Sid. Time. — Distance or P. Angle.
h m s	Circle A B	h m s
23 5 12	° ′ ′	23 8 40·2
6 28	248 31·5 30·0	° ′ ″
10 40	22·5 21·0	248 13 15
11 29	248 4·5 3·5	
	247 57·0 56·0	

Victoria and — 5°·5073. (v) (271)

Chronometer Time.	Readings of Scale or Position Circle.	Cape Sid. Time. — Distance or P. Angle.
h m s	° ′ ′	h m s
23 22 42	*270 26·5 25·5	23 26 14·9
24 4	24·0 23·0	° ′ ″
27 6	50·0 49·0	90 36 22
30 16	47·0 46·0	

Chronometer Correction + 12ˢ·9.
Observations worth nothing—Images extremely diffused and very faint.
The bright star—5°·5075 appeared 30″, sometimes quite 40″ in diameter, like a faint planetary nebula, and the planet, as well as—4°·4960 could be generally seen only as a faint ghost. Fog, with full Moon near planet. West part of sky clouded up after these bisections.

	B	t	T
h m	in.	°	°
At 22 43	30·22	52·4	52·7
23 55			51·7

Digitized by Google

Chronometer Time.	Readings of Scale or Position Circle.	Cape Sid. Time. / Distance or P. Angle.	Chronometer Time.	Readings of Scale or Position Circle.	Cape Sid. Time. / Distance or P. Angle.
		1889, Ju 6 GILL.			
	Victoria and — 4°·4936. (u) (272)			Victoria and — 4°·4936. (u) (273)	
h m s	Scale r		h m s	Scale r	
23 6 13	98 301 4·771	h m s	23 12 10	101 299 3·929	h m s
7 20	·787	23 8 14·7	14 16	4·071	23 17 23·0
8 42	101 299 3·847	"	16 52	98 301 4·539	"
9 49	·792	105·086	25 19	·073*	101·795
	Victoria and — 4°·4936, (u) measurement of Position Angles simultaneously with half distances.				
	Position Angle.				(274)
23 27 47		99 301 3·141			h m s
30 35		·064		Half Distance	23 32 6·2
33 56		100 299 5·382		"	Full Distance
35 12		·440		48·557.	"
					97·114
	° ′ ″				
23 36 45	341 12·0 11·0	100 299 5·482		Circle reading for Position Angle.	(275 s & p)
40 33	342 25·0 24·0	·344			h m s
46 38	333 5·0 4·5	99 301 3·035		° ′ ″	23 43 58·2
51 2	0·0 0·0	·106		337 25 11	"
				Half Distance.	96·772
				"	
				48·386	
	Victoria and — 4°·4936, (u) measured simultaneously for Position Angle and half distance.				
h m s	° ′ ″	Scale r		Position Angle.	(276 s & p)
23 57 20	335 13·5 13·0	99 301 2·775		° ′ ″	h m s
0 2 42	337 22·0 21·5	·689		343 30 34	0 4 5·2
5 10	349 49·5 49·0	100 299 5·928		Half Distance.	
10 14	351 38·0 38·0	·940		"	
	Reversed Position Circle.			44·058	
	Victoria and — 4°·4936. (u)				(277 s & p)
	° ′ ″			Position Angle.	
0 12 39	*173 48·5 48·0	100 299 5·851		° ′ ″	h m s
17 25	53·0 52·0	6·159		168 17 4	0 18 58·2
20 3	162 8·0 7·5	99 301 2·572		Half Distance.	
24 51	163 20·0 19·5*	·288		"	
				42·179	

		B	t	T
	h m	in	°	°
Run + 0r·019.	At 23 0	30·64	50·0	49·8
Chronometer Correction + 13s·7.	0 26	30·63	50·0	51·5

* 23h. 20m. (*i. e.* after the third pointing in Obs. 273) the definition became very bad—although it was good in the previous pointings.

After Note.—I am very doubtful of the accuracy or value of the measures of half distance, although the Position Angles may have some value. On reduction the half distances, as suspected, proved quite unreliable and were rejected.

Digitized by Google

Chronometer Time.	Readings of Scale or Position Circle.	Cape Sid. Time. — Distance or P. Angle.	Chronometer Time.	Readings of Scale or Position Circle.	Cape Sid. Time. — Distance or P. Angle.
	1889, July 17. GILL.				
	Victoria and — 4°·4926. (t) (278)			Victoria and — 4°·4926. (t) (279)	
	A B			A B	
h m s	° ′ ′	h m s	h m s	° ′ ′	h m s
16 8 23	136 16·0 15·5	16 11 1·2	16 15 16	133 40·0 39·5	16 17 56·5
9 48	135 57·0 56·5	° ′ ″	16 29	40·0 39·5	° ′ ″
11 42	133 3·0 2·5	134 36 19	18 10	137 5·0 4·5	135 24 22
13 17	10·0 10·0		20 56	13·5 13·0	
	Victoria and — 4°·4926. (t) (280)			Victoria and — 4°·4926. (t) (281)	
16 24 50	137 59·0 58·5	h m s	16 30 26	135 27·0 26·5	h m s
25 57	47·0 46·0	16 27 6·5	32 18	48·0 48·0	16 34 32·0
27 37	135 2·5 2·0	° ′ ″	36 25	138 51·0 50·5	° ′ ″
29 7	17·0 16·0	136 31 0	38 4	139 28·0 27·5	137 23 19
				Reversed Position Circle.	
	Victoria and — 4°·4926. (t) (282)			Victoria and — 4°·4926. (t) (283)	
16 40 48	319 36·0 35·0	h m s	16 47 20	317 37·0 36·5	h m s
43 28	50·5 50·0	16 43 55·5	54 12	318 38·0 37·5	16 54 10·5
44 38	317 12·0 11·5	° ′ ″	56 26	321 48·0 47·5	° ′ ″
45 53	29·5 29·0	138 31 41	57 49	59·5 59·0	140 0 22
	Victoria and — 4°·4926. (t) (284)			Victoria and — 4°·4926. (t) (285)	
17 1 43	322 38·0 37·5	h m s	17 13 29	321 11·5 11·0	h m s
4 25	57·0 56·0	17 7 0·2	15 47	49·0 48·5	17 17 15·7
9 12	320 32·0 31·5	° ′ ″	18 20	325 19·5 19·0	° ′ ″
11 46	321 38·5 38·0	141 56 4	20 32	18·5 18·0	143 24 22
	Victoria and — 4°·4926. (t) (286)			Victoria and — 4°·4926. (t) (287)	
	Scale r	° ′		Scale r	° ′
17 28 12	101 298 5·056	322 42	17 36 20	98 302 3·150	320 50
30 33	·091	330 25	39 17	·079	329 18
32 33	98 302 3·346	328 20	41 3	101 298 5·543	326 22
34 14	·250	320 50	42 48	·601	332 29
	$\psi = 3° 46'$.	h m s 17 31 36·7 — 131·368		$\psi = 3° 23'$.	h m s 17 40 5·7 — 127·935
	Victoria and — 4°·4926. (t) (288)			Victoria and — 4°·4926. (t) (289)	
17 46 17	101 298 5·696	154 18	17 56 59	98 302 2·447	153 0
47 51	·829	146 22	58 50	·303	145 49
49 49	98 302 2·665	143 36	18 2 4	101 299 2·356	149 10
54 5	·439	151 29	3 49	·380	157 45
	$\psi = 3° 50'$.	h m s 17 49 44·2 — 124·138		$\psi = 3° 57'$.	h m s 18 0 39·2 — 120·350

	B	t	T
	h m	in	°
At	16 6	30·54	55·5
	18 6	30·54	54·0
			52·7

Run + 0ᵀ·021.
Chronometer Correction + 138ˢ·7.
I. 2–3 ; S. 2–3.
After the observations of Position Angle, made in the usual way, the distances were observed by placing the images thus ˙ : . and . : ˙ , the distances being too small to be measured by rotating the Position Circle. The Position Angles noted in small type after the pointing in distance are not measures, but are only required for correcting the observations to the true distance in the line joining the stars.

Digitized by Google

Chronometer Time.	Readings of Scale or Position Circle.	Cape Sid. Time. — Distance or P. Angle.	Chronometer Time.	Readings of Scale or Position Circle.	Cape Sid. Time. — Distance or P. Angle.
		1889, July 17. AUWERS.			
	Victoria and — 4°·4926. (t) (290–91)			Victoria and — 4°·4926. (t) (292–93)	
h m s	B A ° ′ ′		h m s	Scale ° ′	
22 47 56	231 52·0 53·0		22 58 44	101 298 4·970 233 54	
49 45	44·5 45·5		23 0 54	·729 240 19	
50 55	28·0	h m s	2 25	98 302 3·695 237 9	h m s
51 37	232 3·0	22 52 59·1	3 48	·699 231 32	23 5 20·6
54 16	236 9·0	° ′ ″	6 46	98 302 3·989 57 58	″
54 59	15·5	234 4 21	8 6	4·016 51 47	136·283
55 55	32·0		9 21	101 298 4·546 54 42	
56 40	26·5 28·0		10 51	·360 62 2	
				$\psi = 3° 10'$ Corrections for $\psi + 0''·208$.	
	Victoria and — 4°·4926. (t) (294–95)			Victoria and — 4°·4926. (t) (296–97)	
23 15 37	59 10·0 11·0		23 25 39	57 33·5 34·5	
16 47	39·0		26 53	52·5	
17 52	47·5	h m s	28 12	58 0·0	h m s
18 33	60 28·5	23 19 35·8	28 53	5·0	23 29 30·5
20 31	56 50·5	° ′ ″	29 58	61 51·0	° ′ ″
21 2	53·0	238 23 27	30 31	53·5	239 52 47
21 56	57·0		31 40	54·0	
22 39	57 16·0		32 28	62 4·5	
	Victoria and — 4°·4926. (t) (298)			Victoria and — 4°·4926. (t) (299)	
23 33 56	102 299 3·483	° ′ h m s	23 39 16	98 302 5·409	° ′ h m s
35 23	·533	59 11 23 36 9·7	41 29	·198	55 55 23 42 12·0
36 36	98 302 5·117	66 16 ″	42 53	102 299 3·118	62 58 ″
37 49	·288	63 45 148·874	44 15	·139	60 32 151·289
	$\psi = 3° 41'$. Corrections for $\psi + 0''·307$.	55 55		$\psi = 3° 19'$. Corrections for $\psi + 0''·255$.	66 55
	Victoria and — 4°·4926. (t) (300)			Victoria and — 4°·4926. (t) (301)	
23 46 38	102 299 3·150	° ′ h m s	23 53 13	98 302 5·855	° ′ h m s
48 19	2·854	247 21 23 49 9·0	54 36	·928	244 14 23 55 29·2
49 38	98 302 5·846	240 39 ″	55 54	102 299 2·612	238 22 ″
51 6	·760	237 50 154·438	57 19	·501	241 25 157·124
	$\psi = 3° 16'$. Corrections for $\psi + 0''·251$.	244 14		$\psi = 3° 22'$. Corrections for $\psi + 0''·272$.	249 0

Digitized by Google

Chronometer Time.	Readings of Scale or Position Circle.	Cape Sid. Time. — Distance or P. Angle.	Chronometer Time.	Readings of Scale or Position Circle.	Cape Sid. Time. — Distance or P. Angle.
1889, July 17. AUWERS—*continued.*					
	Victoria and — 4°·4926. (t) (302-3)				
h m s	° ′				
23 59 22	245 7·5				
0 0 10	4·0				
1 5	40·0				
1 33	30·0	h m s			
2 6	242 38·0	0 2 11·9			
2 57	48·0	° ′ ″			
3 39	55·0	244 6 51			
4 29	243 0·0				
5 18	16·0 17·0				

Run + 0ᵐ·015.
Chronometer Correction + 13ˢ·7

	h m	B in.	t °	T °
At	22 41	30·51	48·0	42·6
	0 8	30·49	46·5	43·5

I. at first 3, soon 4; observation of distance made in same manner as those by Gill same evening, but very unsatisfactory and untrustworthy.
For the Position Angles Microscope B was (in general) only read. A correction of + 0′·54 (= 32″·4) has been applied to the readings of Microscope B to reduce to mean of two Microscopes.
The Position Angles noted in small type after the pointing in distance are not measures, but are only required for correcting the observations to the true distance in the line joining the stars.

1889, July 18. AUWERS.

	Victoria and — 4 ·4926. (t) (304)			Victoria and — 4°·4926. (t) (305)	
h m s	Scale r		h m s	Scale r	
16 13 34	92 309 2·045	h m s	16 18 18	108 293 2·327	m s
14 58	·030	16 15 41·8	19 27	·228	16 20 54·1
16 9	108 293 2·379	″	20 20	·045	″
17 12	·167	640·341	21 19	92 309 2·400	642·886
	Rotated prism 90°.		22 11	·465	
				Reversed Position Circle.	
	Victoria and — 4°·4926. (t) (306)			Victoria and — 4°·4926. (t) (307)	
16 24 19	92 309 2·522	h m	16 29 6	108 292 5·590	h m s
25 18	·640	16 26 5·5	30 43	·507	16 31 25·3
26 25	108 293 1·839	″	31 48	92 309 2·988	″
27 26	292 5·669	645·648	33 10	3·053	648·858
	Rotated prism 90°.				
	Victoria and — 4°·4926. (t) (308)			Victoria and — 4°·4926. (t) (309)	
	° A ′ B ′			° A ′ B ′	
16 35 3	91 38·0 37·0	h m s	16 40 9	92 20·0 19·0	h m s
36 36	32·0 31·0	16 37 20·8	40 51	20·0 19·0	16 41 50·8
37 51	92 18·5 17·0	° ′ ″	42 3	91 36·0 34·5	° ′ ″
38 59	13·5 11·5	271 54 49	43 26	34·0 33·5	271 57 0
	Rotated prism 90°.			Reversed Position Circle.	

Digitized by Google

Chronometer Time.	Readings of Scale or Position Circle.	Cape Sid. Time. — Distance or P. Angle.	Chronometer Time.	Readings of Scale or Position Circle.	Cape Sid. Time. — Distance or P. Angle.
1889, July 18. AUWERS—*continued*.					
	Victoria and — 4°·4926. (t) (310)			Victoria and — 4°·4926. (t) (311)	
h m s	° ′ A ″ B ″	h m s	h m s	° ′ A ″ B ″	h m s
16 45 48	271 44·5 43·5	16 47 39·8	16 50 13	272 16·5 15·5	16 51 38·5
46 43	39·5 38·5	° ′ ″	50 43	15·5 14·5	° ′ ″
48 14	272 19·5 18·0	272 0 18	51 36	271 43·0 41·5	271 58 53
49 0	20·0 19·0		53 8	43·0 41·5	
	Rotated prism 90°.				
	Standard Stars. (312 & 314)			Standard Stars. (313)	
16 57 14	277 46·5 45·5	h m s	17 2 43	19 381 2·161	h m s
58 59	46·5 45·5	17 6 56·1	3 52	·151	17 7 18·8
17 0 13	46·0 45·0	° ′ ″	5 1	·150	′
1 26	46·0 45·0	277 47 58	6 17	·210	6454·205
12 44	50·5 49·0		8 16	180 220 2·408	
13 42	51·0 49·5		8 56	·395	
14 18	51·0 49·5		10 2	·374	
15 5	51·0 50·0		11 34	·334	

Run + 0ᵐ·010.
Chronometer Correction + 13ˢ·5.
For Observations 304 and 305, I. and S. 4.
306 and 307 „ 2–3.
308 and 309 „ 4.
310 to 313 „ 3.

	B	t	T
h m	in.	°	°
At 17 17	30·27	51·5	45·0

1889, July 18. GILL.

	Standard Stars. (315)			Standard Stars. (316)	
	Estimated. A B			Scale r	
h m s	° ′ ′ ″ ′ ″	h m s	h m s	19 380 5·890	h m s
22 46 35	277 50; 0 28, 9 37	22 52 21·1	22 59 55	·842	23 2 41·6
51 18	0 1, 9 8	° ′ ″	23 1 11	180 220 2·549	
54 4	45; 5 50, 4 49	277 47 25	3 26	·527	6451·939
56 33	5 30, 4 50		5 20		
	Victoria and — 4°·4926. (t) (317)			Victoria and — 4°·4926. (t) (318)	
	° ′ ′	h m s		° ′ ′	h m s
23 20 32	274 0·0 59·5	23 23 10·6	23 28 22	93 29·0 28·5	23 31 44·6
21 46	273 57·0 56·5	° ′ ″	30 28	29·0 28·5	° ′ ″
23 55	29·5 29·0	273 43 11	32 46	94 0·5 0·0	273 45 7
25 35	27·0 27·0		34 28	3·0 2·5	

Digitized by Google

Chronometer Time.	Readings of Scale or Position Circle.	Cape Sid. Time. — Distance or P. Angle.	Chronometer Time.	Readings of Scale or Position Circle.	Cape Sid. Time. — Distance or P. Angle.
	1889, July 18. GILL—*continued.*				
	Victoria and — 4°·4926. (t) (319)			Victoria and — 4°·4926. (t) (320)	
h m s	Scale r		h m s	Scale r	
23 37 26	111 289 5·709	h m s	23 42 41	89 312 3·148	h m s
39 18	·627	23 39 45·6	44 36	·151	23 45 10·4
40 20	89 312 2·996	"	45 47	111 289 5·284	"
41 4	3·000	888·688	46 43	·090	891·852
	Victoria and — 4°·4926. (t) (321)			Victoria and — 4°·4926. (t) (322)	
23 48 11	111 289 5·184	h m s	23 55 53	*88 311 3·810	h m s
49 26	·050	23 51 21·0	57 4	·877	0 0 27·2
51 17	·011	"	59 34	111 289 4·615	"
52 32	88 311 3·544	894·407	0 1 28	·519	899·253
53 25	·625		3 0	88 311 4·179	
			3 48	·160	

Run + 0ᵈ·019.
Chronometer Correction + 13ˢ·6.
I. 1–2, S. 1–2 for Standard Stars and Position Angles.
I. 2, S. 2–3 for all distances of planet except last four pointings, when I. 3–4, S. 3–4.
For Coincidence of Microscopes A 5′ 12″ } Mean 5′ 7″.
" B 5′ 2″ }

	B	t	T
h m	in.	°	°
At 22 44	30·13	46·0	46·6
0 5	30·136	48·8	49·5

Note.—The readings of Microscopes A and B are diminished by 5′: the correction for coincidence applied in computing the Position Angle 315 is therefore — 7″.
* In the original the scale reading at 22ʰ 55ᵐ 53ˢ is entered 89 in mistake.

	1889, July 19. GILL.				
	Victoria and — 4°·4926. (t) (323)			Victoria and — 4°·4903. (q) (324)	
h m s	Scale r		h m s	Scale r	
15 39 49	117 283 4·500	h m s	15 48 19	76 325 2·448	h m s
40 49	·366	15 42 16·2	51 46	·266	15 52 0·7
43 18	82 317 4·110	"	53 3	124 277 2·258	"
44 14	·161	1381·711	54 0	·334	1924·769
				Rotated prism 90°.	
	Victoria and — 4°·4903. (q) (325)			Victoria and — 4°·4926. (t) (326)	
15 55 43	124 277 2·374	h m s	16 5 45	82 317 5·352	h m s
57 14	·465	15 58 32·5	7 0	·436	16 7 50·9 (1)
59 19	76 325 1·923	"	8 52	117 283 2·810	or 8 14·5 (2)
16 0 59	76 324 5·768	1921·609	10 26	*[2·602]	"
					1396·200 (1)
					or 1396·723 (2)
				Reversed Position Circle.	

Digitized by Google

1889, July 19. GILL—*continued.*

Victoria and — 4°·4926. (t) (327)

Chronometer Time.	Readings of Scale or Position Circle.	Cape Sid. Time. Distance or P. Angle.
h m s	Scale r	h m s
16 14 19	117 283 [2·602]*	16 15 53·5 (1)
15 14	2·545	or 16 7·2 (2)
16 13	82 318 1·969	"
16 53	2·038	1400·429 (1)
		or 1400·569 (2)

Victoria and — 4°·4903. (q) (328)

Chronometer Time.	Readings of Scale or Position Circle.	Cape Sid. Time. Distance or P. Angle.
h m s	Scale r	h m s
16 21 38	76 324 4·747	16 23 38·6
22 56	·590	"
24 6	124 277 3·809	1908·426
25 0	123 276 3·944	
	Rotated prism 90°.	

Victoria and — 4°·4903. (q) (329)

Chronometer Time.	Readings of Scale or Position Circle.	Cape Sid. Time. Distance or P. Angle.
h m s		h m s
16 26 8	123 276 3·976	16 29 19·2
28 34	4·076	"
30 21	76 324 4·216	1905·254
31 19	·149	

Victoria and — 4°·4926. (t) (330)

Chronometer Time.	Readings of Scale or Position Circle.	Cape Sid. Time. Distance or P. Angle.
h m s		h m s
16 33 37	82 318 2·942	16 36 12·5
35 52	3·049	"
36 43	117 282 5·306	1411·871
37 43	·265	

Victoria and — 4°·4926. (t) (331)

Chronometer Time.	Readings of Scale or Position Circle.		Cape Sid. Time. Distance or P. Angle.
	A	B	
h m s	° ′	′	h m s
16 40 45	95 55·0	54·0	16 43 14·0
42 29	56·0	55·0	° ′ ″
43 43	37·0	36·0	275 46 0
45 4	38·0	37·0	

Victoria and — 4°·4903. (q) (332)

Chronometer Time.	Readings of Scale or Position Circle.		Cape Sid. Time. Distance or P. Angle.
	A	B	
h m s	° ′	′	h m s
16 50 53	84 43·0	42·5	16 54 43·7
53 3	41·0	40·5	° ′ ″
55 16	55·0	54·5	84 47 53
58 48	53·5	53·0	

Victoria and — 4°·4903. (q) (333)

Chronometer Time.	Readings of Scale or Position Circle.		Cape Sid. Time. Distance or P. Angle.
h m s			h m s
17 0 33	84 52·0	52·0	17 3 16·5
2 20	52·0	51·5	° ′ ″
3 51	39·5	39·0	84 45 15
5 27	38·0	38·0	

Victoria and — 4°·4926. (t) (334)

Chronometer Time.	Readings of Scale or Position Circle.		Cape Sid. Time. Distance or P. Angle.
h m s			h m s
17 10 8	95 39·5	39·0	17 14 53·0
13 33	39·5	39·0	° ′ ″
15 29	56·0	55·0	275 47 11
19 27	55·0	54·5	

Run + 0ᵐ·013.
Chronometer Correction + 13ᵐ·7.
I. 2, S. 2 throughout, very satisfactory observations.
* One pointing omitted, it is doubtful if the reading 2ʳ·602 applies to the last pointing of No. 326, or the first of No. 237. Assumption (1) found most probable.

	B	t	T
h m	in.	°	°
At 15 37	30·30	54·8	52·5
17 21	30·33	51·5	48·8

1889, July 19. AUWERS.

Victoria and — 4°·4926. (t) (335 & 336)

Chronometer Time.	Readings of Scale or Position Circle.		Cape Sid. Time. Distance or P. Angle.
	A	B	
h m s	° ′	′	h m s
22 58 20	275 51·5	50·0	23 3 23·0
59 38	50·5	49·5	° ′ ″
	Rotated prism 90°.		276 0 18·5
23 1 4	275 51·5	50·0	
2 18	54·0	52·5	
4 33	276 10·0	9·5	
5 34	10·5	9·5	
	Rotated prism 90°.		
6 27	276 9·0	8·0	
7 20	10·0	9·0	

Victoria and — 4°·4903 (q) (337 & 338)

Chronometer Time.	Readings of Scale or Position Circle.		Cape Sid. Time. Distance or P. Angle.
	A	B	
h m s	° ′	′	h m s
23 13 45	263 16·5	16·0	23 17 29·2
14 43	16·0	15·0	° ′ ″
	Rotated prism 90°.		83 6 40
15 32	263 17·0	16·5	
16 12	15·5	14·7	
17 25	263 0·0	59·0	
18 27	262 56·0	55·0	
	Rotated prism 90°.		
20 20	262 58·0	57·0	
21 40	57·5	57·0	

Digitized by Google

1889, July 19. AUWERS—*continued.*

Victoria and — 4°·4903. (q) (339 & 340)

Chronometer Time.	Readings of Scale or Position Circle. A /	B /	Cape Sid. Time. Distance or P. Angle.
h m s	°		
23 24 4	82 58·5	57·0	
24 55	58·0	57·0	
	Rotated prism 90°.		
25 45	82 57·0	56·0	h m s
26 36	55·5	54·5	23 27 43·6
28 7	83 12·5	11·0	° ′ ″
28 51	10·5	9·7	83 3 20
	Rotated prism 90°.		
30 3	83 10·0	9·0	
31 38	9·0	8·0	

Victoria and — 4°·4926. (t) (341 & 342)

Chronometer Time.	Readings of Scale or Position Circle. A /	B /	Cape Sid. Time. Distance or P. Angle.
h m s	°		
23 33 45	96 12·5	11·5	
34 35	9·0	8·0	
	Rotated prism 90°.		
35 17	96 8·0	7·5	h m s
35 56	12·0	10·5	23 37 6·0
37 25	95 52·0	51·0	° ′ ″
38 13	50·5	49·7	276 1 7
	Rotated prism 90°.		
39 19	95 54·5	53·5	
40 28	54·5	53·0	

Victoria and — 4°·4926. (t) (343 & 344)

Chronometer Time.	Readings of Scale or Position Circle. Scale	r	Cape Sid. Time. Distance or P. Angle.
23 42 25	79 321	2·860	
43 34		·900	
45 0	120 279	5·560	
46 10		·400	h m s
	Rotated prism 90°.		23 47 20·4
47 51	120 279	5·498	″
49 11		·353	1652·333
50 40	79 321	3·431	
52 3		·428	

Victoria and — 4°·4903. (q) (345 & 346)

Chronometer Time.	Readings of Scale or Position Circle. Scale	r	Cape Sid. Time. Distance or P. Angle.
23 56 14	79 321	4·109	
57 38		·003	
0 0 53	120 279	4·801	
3 30	p½	·724	h m s
4 58		·968	0 5 51·7
7 57	p½	5·164	″
	Rotated prism 90°.		1656·575
0 9 8	120 279	5·248	
10 12		·232	
11 33	79 321	3·180	
12 57		·168	
15 13		·080	

Victoria and — 4°·4903. (q) (347 & 348)

Chronometer Time.	Readings of Scale or Position Circle. Scale	r	Cape Sid. Time. Distance or P. Angle.
0 24 9	79 321	2·602	
26 10		·390	
	Rotated prism 90°.		
27 44	120 280	2·261	
28 38		·268	h m s
	Rotated prism 90°.		0 29 56·1
30 3	120 280	2·222	″
30 59		·368	1643·133
	Rotated prism 90°.		
33 45	79 321	1·916	
35 31	320	5·824	
36 52		·648	

	B	t	T
	h m	in	°
At	18 40	30·35	50·0
	0 38	30·40	50·0
			46·5
			48·6

Run + 0r·011.
Chronometer Correction + 13s·7.
I. 4 : S. 4 : from 23h 56m generally through thin clouds, which thickened after 0h 16m; later observations extremely difficult and uncertain.
The result of the set 0h 24m to 0h 37m may be combined with the first set of — 4°·4903 with weight ½, and the whole will then constitute a set equal in weight to that of — 4°·4926.
Whole morning very unsatisfactory and disappointing.

Digitized by Google

Chronometer Time.	Readings of Scale or Position Circle.	Cape Sid. Time. / Distance or P. Angle.	Chronometer Time.	Readings of Scale or Position Circle.	Cape Sid. Time. / Distance or P. Angle.
		1889, July 20. AUWERS.			
	Victoria and — 4°·4903. (q) (349)			Victoria and — 4°·4903. (q) (350)	
h m s	Scale r	h m s	h m s	Scale r	h m s
15 50 48	115 286 2·708	15 52 38·3	15 54 58	85 315 5·735	15 56 34·3
51 49	·604	"	55 38	·675	"
52 57	85 315 5·774	1198·209	56 46	115 286 2·958	1196·615
54 2	·698		57 58	·927	
	Rotated prism 90°.			Reversed Position Circle.	
	Victoria and — 4°·4903. (q) (351)			Victoria and — 4°·4903. (q) (352)	
16 0 8	115 286 3·109	h m s	16 5 39	85 315 5·297	h m s
1 4	·045	16 2 42·8	7 7	·079	16 8 57·8
3 53	85 315 5·338	"	8 23	·022	"
4 49	·178	1193·690	9 55	115 286 3·627	1190·412
	Rotated prism 90°.		10 51	·554	
	Victoria and — 4°·4903. (q) (353)			Victoria and — 4°·4903. (q) (354)	
16 31 18	114 285 4·705	h m s	16 34 45	85 315 3·742	h m s
32 9	·677	16 32 44·3	35 25	·688	16 36 8·3
32 57	85 315 3·831	"	36 21	114 285 4·931	"
33 36	·780	1178·306	37 5	·955	1176·588
	Rotated prism 90°.			Reversed Position Circle.	
	Victoria and — 4°·4903. (q) (355)			Victoria and — 4°·4903. (q) (356)	
16 42 29	114 285 5·270	h m s	16 47 7	85 315 3·105	h m s
43 51	·310	16 44 41·6	47 53	2·982	16 48 43·8
45 19	85 315 3·152	"	48 51	114 285 5·590	"
46 10	·140	1171·983	50 7	·616	1169·891
	Rotated prism 90°.				
	Standard Stars. (357)			Standard Stars. (358)	
16 55 52	180 220 2·368			Estimated. A B	
56 53	·404	h m s		° ′ ′ ″ ′ ′	
58 33	19 381 2·080	16 58 22·8		277 46 6 28 6 4	h m s
59 22	·231	"	17 4 49	6 12 5 40	17 8 51·6
17 0 20	·227	6454·195	7 38	277 50 10 2 9 35	° ′ ″
1 23	·158		10 5	9 33 9 8	177 17 41
			11 57		

Digitized by Google

Chronometer Time.	Readings of Scale or Position Circle.	Cape Sid. Time. — Distance or P. Angle.	Chronometer Time.	Readings of Scale or Position Circle.	Cape Sid. Time. — Distance or P. Angle.
	1889, July 20. AUWERS—*continued.*				
	Victoria and — 4°·4903. (q) (359)			Victoria and — 4°·4903 (q) (360)	
	A B				
h m s	° ′ ′	h m s	h m s	° ′ ′	h m s
17 18 39	256 15·5 15·5	17 20 51·1	17 24 31	255 56·0 55·5	17 26 12·8
20 1	14·0 13·5	° ′ ″	25 33	52·5 51·5	° ′ ″
21 22	255 57·5 56·5	76 4 57	26 34	256 12·0 11·2	76 2 15
22 25	54·0 53·0		27 16	10·0 9·5	
	Rotated prism 90°.				
	Victoria and — 4°·4903. (q) (361)			Victoria and — 4°·4903. (q) (362)	
17 28 39	256 11·5 10·5	h m s	17 36 12	255 46·0 46·0	h m s
29 54	7·0 6·5	17 31 23·6	37 11	46·0 45·0	17 38 16·1
32 3	255 51·0 49·5	° ′ ″	38 53	256 1·5 0·5	° ′ ″
34 1	51·0 50·0	75 59 37	39 51	4·0 3·0	75 54 0
	Rotated prism 90°.				
	Victoria and — 4°·4903. (q) (363)			Victoria and — 4°·4903. (q) (364)	
17 44 3	256 2·5 1·5	h m s	17 49 23	253 39·5 38·3	
45 29	255 58·5 57·5	17 46 17·1	50 35	39·5 38·5	h m s
46 42	42·0 40·5	° ′ ″	52 18	56·0 55·0	17 51 41·8
47 57	40·5 39·7	75 50 20	53 34	56·0 55·0	° ′ ″
	Rotated prism 90°.				75 47 14
	Victoria and — 4°·4903. (q) (365)			Victoria and — 4°·4903. (q) (366)	
17 54 41	255 55·0 54·5	h m s	17 59 14	255 33·0 32·5	
55 59	54·0 53·5	17 56 49·8	18 0 28	33·0 32·5	h m s
57 25	35·0 34·3	° ′ ″	1 50	51·5 50·7	18 1 21·8
58 17	31·0 30·5	75 43 28	2 58	49·0 47·8	° ′ ″
	Rotated prism 90°.				75 41 15

Run + 0ᵐ·012.
Coincidence of P.A. Micrometers A ′ ″ 0 15 / B 0 4 } Correction — 9″.

	B	t	T
	h m	in.	°
At	18 7	30·49	51·2 48·5

Chronometer Correction + 14ˢ·3.
Images generally 2–3, sometimes 2 or even better, but sometimes 3 or scarcely 3. Stars rather faint at beginning and at end; eye of observer in bad condition and very tired at last.

	1889, July 20. GILL.				
	Victoria and — 4°·4903 (q). (367)			Victoria and — 4°·4903. (q) (368)	
	A B				
h m s	° ′	h m s	h m s	° ′ ′	h m s
22 43 41	252 36·0 35·0	22 46 59·7	22 50 55	252 5·0 4·5	22 53 50·4
45 22	30·7 30·0	° ′ ″	52 37	3·0 2·0	° ′ ″
48 18	8·5 8·0	72 19 54	54 47	28·0 27·5	72 15 22
49 40	6·0 5·0		56 5	27·0 26·0	
	Rotated prism 90°.			Reversed Position Circle.	

Digitized by Google

Chronometer Time.	Readings of Scale or Position Circle.	Cape Sid. Time. — Distance or P. Angle.	Chronometer Time.	Readings of Scale or Position Circle.	Cape Sid. Time. — Distance or P. Angle.
1889, July 20. GILL—*continued.*					
	Victoria and — 4°·4903. (q) (369)			Victoria and — 4°·4903. (q) (370)	
	A B ° ′ ′			A B ° ′ ′	
h m s 22 58 38 23 1 7 2 51 4 9	72 23·0 22·5 19·5 19·0 71 56·5 55·5 55·0 54·5	h m s 23 1 55·7 ° ′ ″ 72 8 14	h m s 23 5 29 7 20 10 11 12 47	71 52·0 51·5 52·0 51·0 72 12·5 12·0 12·5 12·0	h m s 23 9 11·2 ° ′ ″ 72 1 56
	Rotated prism 90°.				
	Standard Stars. (371*p*)			Standard Stars. (371*s*)	
	° ′ ′ ″ ′ ″			Scale r	
23 15 53 19 56 30 2 33 0	97 49 : 10 18, 8 34 9 47, 9 0 97 44 : 5 3, 4 20 5 0, 4 5	h m s 23 24 57·2 ° ′ ″ 97 46 52	23 22 8 23 54 26 23 28 27	180 220 2·784 ·832 19 380 5·776 ·732	h m s 23 25 27·4 ″ 6450·018
	Victoria and — 4°·4903. (q) (372)			Victoria and — 4°·4903. (q) (373)	
	Scale r				
23 38 6 40 8 42 42 44 12	88 313 2·016 1·934 112 289 2·725 ·791	h m s 23 41 31·4 ″ 958·324	23 45 20 46 24 50 23 51 20	112 289 2·940 ·931 88 312 5·436 ·400	h m s 23 48 36·2 ″ 954·698
	Rotated prism 90°.			Reversed Position Circle.	
	Victoria and — 4°·4903. (q) (374)			Victoria and — 4°·4903. (q) (375)	
23 53 54 55 32 58 8 0 0 17	88 312 5·097 ·113 112 289 3·522 ·617	h m s 23 57 12·2 ″ 949·925	0 2 23 5 9 6 29 8 48 15 26 16 24	112 289 3·640 4·004 3·929 88 312 4·515 4·196 ·149	h m s 0 8 28·2 ″ 944·923

	h m	B in.	t °	T °
At	22 40	30·45	46·7	42·0
	0 18	30·45	45·3	40·8

Run + 0ʰ·014.
Correction for Coincidence of the Position Circle Microscopes — 0″. For 367 to 370 I. 1–2 S. 1–2
Chronometer Correction + 14ˢ·4. 371 „ 374 2–3 2–3
375 3–4 3–4

1890, July 21. GILL.					
	Victoria and — 4°·4903. (q) (376)			Victoria and — 4°·4903. (q) (377)	
	Scale r			Scale r	
h m s 15 19 31 20 35 22 12 23 2	107 293 5·815 ·795 93 308 2·706 ·601	h m s 15 21 34·4 ″ 565·481	h m s 15 24 21 25 51 26 57 27 43	93 308 2·630 ·510 107 294 2·076 ·035	h m s 15 26 27·4 ″ 563·864
	Rotated prism 90°.			Reversed Position Circle.	

Digitized by Google

1890, July 21. GILL—*continued.*

Victoria and — 4°·4903. (q) (378)

Chronometer Time.	Readings of Scale or Position Circle.	Cape Sid. Time. — Distance or P. Angle.
h m s	Scale r	h m s
15 30 5	107 294 2·161	15 32 24·4
31 36	·257	"
32 44	93 308 2·269	561·544
34 15	·256	

Rotated prism 90°.

Victoria and — 4°·4903. (q) (379)

Chronometer Time.	Readings of Scale or Position Circle.	Cape Sid. Time. — Distance or P. Angle.
h m s	Scale r	
15 36 4	93 308 2·145	
37 58	·039	h m s
39 49	107 294 2·396	15 39 33·2
40 38	·613	"
42 11	·606	558·948
43 48	·602	

Victoria and — 4°·4903. (q) (380)

Chronometer Time.	Readings of Scale or Position Circle.	Cape Sid. Time. — Distance or P. Angle.
h m s		h m s
15 45 39	107 294 2·797	15 47 15·4
46 15	·632	"
47 34	93 307 5·703	556·217
48 36	·690	

Rotated prism 90°.

Victoria and — 4°·4903. (q) (381)

Chronometer Time.	Readings of Scale or Position Circle.	Cape Sid. Time. — Distance or P. Angle.
h m s		h m s
15 50 24	93 307 5·653	15 53 40·2
52 37	·545	"
54 20	107 294 2·996	554·258
56 22	3·017	

Reversed Position Circle.

Victoria and — 4°·4903. (q) (382)

Chronometer Time.	Readings of Scale or Position Circle.	Cape Sid. Time. — Distance or P. Angle.
h m s		h m s
16 2 28	107 294 3·319	16 4 40·9
4 0	·364	"
5 10	93 307 5·102	549·938
6 8	·049	

Rotated prism 90°.

Victoria and — 4°·4903. (q) (383)

Chronometer Time.	Readings of Scale or Position Circle.	Cape Sid. Time. — Distance or P. Angle.
h m s		h m s
16 7 50	93 307 5·045	16 10 43·9
8 27	·038	"
12 0	107 294 3·659	548·066
13 41	·700	

Standard Stars. (384*s*)

Chronometer Time.	Readings of Scale or Position Circle.	Cape Sid. Time. — Distance or P. Angle.
h m s		h m s
16 18 37	180 220 2·480	16 25 19·8
20 12	·565	"
29 27 }	19 381 2·014 }	6452·485
31 22 }	1·863 }	
32 49 }	1·993 }	

Standard Stars. (384*p*)

Chronometer Time.	Readings of Scale or Position Circle.	Cape Sid. Time. — Distance or P. Angle.
h m s	c ′ ′ ″ ′ ″	h m s
16 21 19	277 50 0 55 0 0	16 24 49·9
23 28	0 40 9 42	° ′ ″
25 56	277 47 7 15 6 20	277 48 28
27 39	7 37 6 37	

Victoria and — 4°·4903. (q) (385)

Chronometer Time.	Readings of Scale or Position Circle.	Cape Sid. Time. — Distance or P. Angle.
h m s	° ′ ′	h m s
16 36 36	227 20·5 20·0	16 39 35·2
38 16	16·0 15·5	° ′ ″
40 29	59·5 59·0	47 38 52
42 2	0·5 0·0	

Rotated prism 90°.

Victoria and — 4° 4903. (q) (386)

Chronometer Time.	Readings of Scale or Position Circle.	Cape Sid. Time. — Distance or P. Angle.
h m s	° ′ ′	h m s
16 43 42	227 52·0 51·0	16 48 39·4
45 50	47·0 46·5	° ′ ″
51 35	226 40·5 40·0	47 15 7
52 33	42·5 41·5	

Reversed Position Circle.

Victoria and — 4°·4903. (q) (387)

Chronometer Time.	Readings of Scale or Position Circle.	Cape Sid. Time. — Distance or P. Angle.
h m s	A B	h m s
16 55 22	° ′ ′	16 58 13·7
56 35	46 37·0 36·5	° ′ ″
58 7	32·0 31·5	46 48 22
17 1 53	47 7·0 6·5	
	46 58·5 58·0	

Rotated prism 90°.

Victoria and — 4°·4903. (q) (388)

Chronometer Time.	Readings of Scale or Position Circle.	Cape Sid. Time. — Distance or P. Angle.
h m s	A B	h m s
17 3 11	° ′ ′	17 5 6·4
4 11	46 54·5 53·5	° ′ ″
5 25	51·5 50·5	46 30 22
6 41	9·5 9·0	
	7·5 7·0	

Digitized by Google

Chronometer Time.	Readings of Scale or Position Circle.	Cape Sid. Time. — Distance or P. Angle.	Chronometer Time.	Readings of Scale or Position Circle.	Cape Sid. Time. — Distance or P. Angle.
		1890, July 21. GILL—*continued.*			
	Standard Stars. (389)				
h m s	° ′ ′ ″ ′ ″	h m s			
17 10 40	97 47 6 40 5 51	17 15 8·7			
13 34	6 22 5 38	° ′ ″			
16 22	97 51 1 10 0 22	277 48 13			
19 1	0 50 0 13				

Run + 0ᵀ·015.
Correction for coincidence of the Position Circle microscopes — 10″.
Chronometer Correction + 14ˢ·4.

I. 1 2 ; S. 2.

	B	t	T
h m	in	°	°
At 15 17	30·40	54·6	50·8
17 22	30·38	51·0	47·0

1889. July 21. AUWERS.

	Victoria and — 4°·4903. (q) (390)			Victoria and — 4°·4903. (q) (391)	
h m s	° ′ ′	h m s	h m s	° ′ ′	
22 34 49	208 28·0 27·0	22 37 7·4	22 39 51	207 2·0 1·5	h m s
36 11	14·5 13·5	° ′ ″	40 54	206 54·0 53·2	22 42 59
37 47	207 15·5 14·3	27 45 13	42 24	207 56·0 55·0	° ′ ″
38 44	5·0 4·0		43 8	59·0 57·0	27 26 39
	Rotated prism 90°.		43 35	208 0·0 59·0	
			44 13	207 50·0 49·0	
				Reversed Position Circle.	
	Victoria and — 4°·4903. (q) (392)			Victoria and — 4°·4903. (q) (393)	
22 47 18	27 34·0 33·5	h m s	22 51 25	26 17·3 16·5	h m s
48 20	29·0 28·2	22 49 4·4	52 30	10·0 9·2	22 53 6·1
49 23	26 29·5 28·0	° ′ ″	53 18	27 1·5 0·2	° ′ ″
50 18	20·2 19·0	26 57 41	54 13	4·0 3·0	26 37 43
	Rotated prism 90°.				
	Standard Stars. (394)			Standard Stars. (395)	
	° ′ ′ ″ ′ ″			Scale r	
22 58 17	97 49 ; 10 18, 9 24	h m s	23 10 36	19 381 1·969	h m s
23 2 58	49 ; 10 10, ...	23 4 1·1	12 21	·928	23 13 14·1
5 43	45 ; 4 10, ...	° ′ ″	13 54	180 220 2·690	″
8 8	45 ; 5 10, 4 28	97 47 22	15 7	·717	6451·459
	Victoria and — 4°·4903. (q) (396)			Victoria and — 4°·4903. (q) (397)	
	° ′ ′			° ′ ′	
23 21 1	25 14·5 14·0	h m s	23 24 37	23 56·0 55·5	h m s
22 5	10·0 9·8	23 22 48·6	25 12	51·5 50·3	23 26 0·4
23 13	24 5·5 4·5	° ′ ″	26 13	24 59·0 57·5	° ′ ″
23 57	23 58·0 57·2	24 36 41	27 1	49·5 48·5	24 23 28
	Rotated prism 90°.			Reversed Position Circle.	

Digitized by Google

1889, July 21. AUWERS—*continued.*

Victoria and — 4°·4903. (q) (398)

Chronometer Time.	Readings of Scale or Position Circle.	Cape Sid. Time. — Distance or P. Angle.
h m s	° ′ ″	h m s
23 28 35	204 45·5 44·5	23 32 2·9
30 27	37·0 36·5	° ′ ″
33 44	203 23·0 21·5	23 59 11
34 27	13·5 12·0	

Rotated prism 90°.

Victoria and — 4°·4903. (q) (399)

Chronometer Time.	Readings of Scale or Position Circle.	Cape Sid. Time. — Distance or P. Angle.
h m s	° ′ ″	h m s
23 35 15	203 11·0 10·2	23 37 1·6
35 58	3·5 2·0	° ′ ″
37 31	204 17·5 16·5	23 39 43.
38 24	9·0 8·0	

Victoria and — 4°·4903. (q) (400)

Chronometer Time.	Readings of Scale or Position Circle.	Cape Sid. Time. — Distance or P. Angle.
h m s	Scale r	h m s
23 46 10	105 295 4·493	23 49 30·6
48 35	·481	″
50 22	94 305 3·908	417·968
51 57	·848	

Rotated prism 90°.

Victoria and — 4°·4903. (q) (401)

Chronometer Time.	Readings of Scale or Position Circle.	Cape Sid. Time. — Distance or P. Angle.
h m s	Scale r	h m s
23 53 11	94 305 3·889	23 55 18·9
54 20	·791	′
55 37	105 295 4·675	416·944
57 9	·630	

Reversed Position Circle.

Victoria and — 4°·4903. (q) (402)

Chronometer Time.	Readings of Scale or Position Circle.	Cape Sid. Time. — Distance or P. Angle.
h m s		h m s
23 59 51	105 295 4·801	0 2 19·6
0 1 12	·767	″
3 6	95 306 3·779	415·776
4 11	·722	

Rotated prism 90°.

Victoria and — 4°·4903. (q) (403)

Chronometer Time.	Readings of Scale or Position Circle.	Cape Sid. Time. — Distance or P. Angle.
h m s		h m s
0 5 33	95 306 3·684	0 7 43·1
6 51	·706	″
8 10	105 295 4·863	415·179
9 20	·832	

Reversed Position Circle.

	B	t	T
	h m	in	°
At	22 30	30·33	46·0
	0 11	30·31	44·8
			41·0
			40·2

Run + 0r·017.
Correction for coincidence of the Position Circle micrometers, assumed, — 10″.
Chronometer Correction + 14s·6.
I. 2 for 392–393.
I. 2–3 : S. 2–3 for 394–395.
I. 3 for 396–399.
I. 3 for 400.
I. 2–3 for 401–402.
I. 2–3 for 303,
Eye of observer very tired and painful during observations of distances ; but observations apparently not bad, except determination of Run. The stars appearing to the tired eye rather faint, it was necessary, in measures of distance to move through rather great arcs in Position Angle, so that the curvature of the apparent path ought to be taken into account. Found the total rotation to have been, for a distance = 415″, between 2° 40′ and 3° 20′.

1890, July 22. AUWERS.

Victoria and — 4°·4903. (q) (404)

Chronometer Time.	Readings of Scale or Position Circle.	Cape Sid. Time. — Distance or P. Angle.
h m s	° ′ ″	h m s
15 33 43	324 19·0 17 5	15 36 29·7
35 52	4·5 4·0	° ′ ″
37 12	40·3 38·5	324 16 10
38 15	43·0 42·5	

Rotated prism 90°.

Victoria and — 4°·4903. (q) (405)

Chronometer Time.	Readings of Scale or Position Circle.	Cape Sid. Time. — Distance or P. Angle.
h m s	° ′ ″	h m s
15 40 18	324 35·5 35·0	15 42 8·7
41 18	36·5 36·3	° ′ ″
42 34	323 56·0 55·3	324 12 53
43 28	44·5 44·0	

Reversed Position Circle.

Digitized by Google

Chronometer Time.	Readings of Scale or Position Circle.	Cape Sid. Time. — Distance or P. Angle.	Chronometer Time.	Readings of Scale or Position Circle.	Cape Sid. Time. — Distance or P. Angle.
1890, July 22. AUWERS—*continued.*					
	Victoria and — 4°·4903. (q) (406)			Victoria and — 4°·4903. (q) (407)	
h m s	° ′ ″	h m s	h m s	° ′ ″	h m s
15 46 6	143 44·0 43·7	15 48 10·0	15 50 24	144 21·5 20·5	15 53 30·3
47 28	37·5 36·5	° ′ ″	51 29	10·0 9·0	° ′ ″
48 45	144 16·5 16·0	323 57 43	52 35	7·5 6·7	323 45 2
49 24	14·0 13·5		54 2	143 20·0 19·0	
	Rotated prism 90°.		56 4	17·5 16·7	
	Victoria and — 4°·4903 (q) (408)			Victoria and — 4°·4903. (q) (409)	
15 57 46	143 8·0 7·0	h m s	16 2 2	143 37·5 37·0	h m s
58 45	9·0 8·0	15 59 34·7	2 43	40·5 40·0	16 3 36·5
59 58	49·5 48·5	° ′ ″	3 32	142 56·0 55·5	° ′ ″
16 0 53	51·0 50·5	323 28 56	5 12	51·0 50·5	323 16 0
	Rotated prism 90°.			Reversed Position Circle.	
	Victoria and — 4°·4903. (q) (410)			Victoria and — 4°·4903. (q) (411)	
16 6 54	322 48·5 47·0	h m s	16 10 36	323 21·5 21·0	h m s
7 55	47·0 46·0	16 8 37·5	11 56	13·5 12·7	16 12 45·7
9 4	323 24·0 23·0	° ′ ″	12 52	322 34·7 34·0	° ′ ″
9 40	24·0 22·7	323 5 16	14 42	32·0 31·0	322 55 3
	Rotated prism 90°.				
	Standard Stars. (412 *p*.)			Standard Stars. (412 *s*)	
	° ′ ′ ″ ′ ″	h m s		Scale r	h m s
16 19 37	277 47 7 10 6 7	16 26 50·5	16 24 40	19 381 2·170	16 27 13·2
22 54	7 3 6 2	° ′ ″	25 50	·157	″
30 10	277 50 10 23 9 28	277 48 13	28 18	118 220 2·498	6453·755
33 44	10 51 10 16		29 8	·428	
	Victoria and — 4°·4903. (q) (413)			Victoria and — 4° 4903. (q) (414)	
	Scale r	h m s			h m s
16 39 3	106 293 3·229	16 41 5·7	16 45 6	93 307 5·621	16 47 5·2
40 17	·272	″	46 8	·687	″
41 24	93 307 5·560	552·854	47 32	107 294 2·937	555·145
42 42	·560		48 38	·832	
	Rotated prism 90°.			Reversed Position Circle.	

Digitized by Google

1890, July 22. AUWERS—*continued.*

Victoria and — 4°·4903. (q) (415)

Chronometer Time.	Readings of Scale or Position Circle.	Cape Sid. Time. — Distance or P. Angle.
h m	Scale r	h m s
16 51 36	107 294 2·751	16 53 21·5
52 42	·692	"
53 39	93 308 1·861	557·100
54 32	·922	

Rotated prism 90°.

Victoria and — 4°·4903. (q) (416)

Chronometer Time.	Readings of Scale or Position Circle.	Cape Sid. Time. — Distance or P. Angle.
h m s	Scale r	h m s
16 56 27	93 308 2·069	16 58 13·7
57 29	·115	"
58 27	107 294 2·452	559·613
59 35	·393	

Run + 0ᵐ·014.
Correction for Coincidence of Position Circle microscopes — 12″·0.
Chronometer Correction + 14ˢ·2.

For 404, 405, 409 I. 3.
406, 407, 408 I. 2–3.
Rest assumed I. 2–3.

	B	t	T
h m	in.	°	°
At 15 10	30·28	53·5	49·0
17 1	30·28	52·8	50·0

1889, July 22. GILL.

Victoria and — 4°·4903. (q) (417)

Chronometer Time.	Readings of Scale or Position Circle.	Cape Sid. Time. — Distance or P. Angle.
h m s	° ′ ″	h m s
22 53 31	129 54·0 53·5	22 56 42·2
55 13	48·0 48·0	° ′ ″
57 52	7·0 6·0	309 28 15
59 16	5·0 4·5	

Rotated prism 90°.

Victoria and — 4°·4903. (q) (418)

Chronometer Time.	Readings of Scale or Position Circle.	Cape Sid. Time. — Distance or P. Angle.
h m s	° ′ ″	h m s
23 1 33	129 1·0 0·5	23 4 46·2
3 19	128 58·5 58·0	° ′ ″
5 8	129 38·0 37·0	309 17 4
8 8	32·0 31·5	

Victoria and — 4°·4903. (q) (419)

Chronometer Time.	Readings of Scale or Position Circle.	Cape Sid. Time. — Distance or P. Angle.
h m s	Scale r	h m s
23 11 26	108 291 2·998	23 14 1·0
12 31	·866	"
14 56	91 309 5·632	715·532
16 14	·732	

Rotated prism 90°.

Victoria and — 4°·4903. (q) (420)

Chronometer Time.	Readings of Scale or Position Circle.	Cape Sid. Time. — Distance or P. Angle.
h m s	Scale r	h m s
23 17 17	91 309 5·758	23 21 41·2
19 22	·807	"
22 53	109 292 2·566	718·275
26 16	·411	

Victoria and — 4°·4903. (q) (421)

Chronometer Time.	Readings of Scale or Position Circle.	Cape Sid. Time. — Distance or P. Angle.
h m s		h m s
23 27 31	109 292 2·408	23 30 34·5
28 9	·321	"
31 31	91 310 2·443	722·285
34 10	·514	

Rotated prism 90°.

Victoria and — 4°·4903. (q) (422)

Chronometer Time.	Readings of Scale or Position Circle.	Cape Sid. Time. — Distance or P. Angle.
h m s		h m s
23 36 39	91 310 2·721	23 43 30·5
41 5	·691	"
46 38	109 291 5·589	727·346
48 43	·558	

Digitized by Google

1889, July 22. GILL—*continued.*

Standard Stars. (423*p*)

Chronometer Time.	Readings of Scale or Position Circle.	Cape Sid. Time. — Distance or P. Angle.
h m s	° ′ ′ ″ ′ ″	h m s
23 54 21	97 49 8 57 8 6	0 7 10·5
0 0 24	8 50 7 56	° ′ ″
14 32	97 42 2 55 2 13	97 45 3
18 28	1 55 1 10	

Standard Stars. (423*s*)

Chronometer Time.	Readings of Scale or Position Circle.	Cape Sid. Time. — Distance or P. Angle.
h m s	Scale r	h m s
0 3 26	180 220 3·236	0 6 52·0
4 44	·092	″
6 20	19 380 5·386	6446·733
12 1	·524	

Run + 0r·018.
Correction for Coincidence of Position Circle microscopes — 12″.
Chronometer Correction + 14s·2.

	h	m	B in.	t °	T °
At [	17	1	30·28	52·8	50·0]*
	0	20	30·22	50·7	52·0

* The meteorological readings were inadvertently omitted before the observations. The meteorological factors are interpolated from the last readings by Dr. Auwers.
Observations very slow on account of bad images.
At beginning I. 3 ; S. 3.
At end I. 3–4 ; S. 3–4.

1889, July 23. GILL.

Victoria and — 4°·4916. (r) (424)

Chronometer Time.	Readings of Scale or Position Circle.	Cape Sid. Time. — Distance or P. Angle.
h m s	Scale r	h m s
15 26 57	145 256 4·456	15 29 44·6
28 23	·455	″
30 47	55 345 4·283	3587·439
31 55	·201	

Victoria and — 5°·5036. (n) (425)

Chronometer Time.	Readings of Scale or Position Circle.	Cape Sid. Time. — Distance or P. Angle.
h m s	Scale r	h m s
15 38 12	37 364 2·770	15 41 27·9
39 28	·794	″
41 52	163 237 5·890	5056·270
45 23	·881	

Reversed Position Circle.

Victoria and — 5°·5036. (n) (426)

Chronometer Time.	Readings of Scale or Position Circle.	Cape Sid. Time. — Distance or P. Angle.
15 49 58	163 238 2·079	h m s
51 54	·080	15 53 40·2
54 40	37 364 2·409	″
56 34	·215	5053·045
57 51	·265	

Interruption by clouds.

Victoria and — 4°·4916. (r) (427)

Chronometer Time.	Readings of Scale or Position Circle.	Cape Sid. Time. — Distance or P. Angle.
16 17 14	55 346 1·991	h m s
19 7	2·069	16 20 42·1
21 48	145 256 2·430	″
23 43	·280	3606·920

Victoria and — 4°·4916. (r) (428)

Chronometer Time.	Readings of Scale or Position Circle.	Cape Sid. Time. — Distance or P. Angle.
16 32 42	145 256 1·900	h m s
37 11	255 5·704	16 38 19·4
38 53	55 346 2·811	″
43 35	3·012	3614·097

Victoria and — 5°·5036. (n) (429)

Chronometer Time.	Readings of Scale or Position Circle.	Cape Sid. Time. — Distance or P. Angle.
16 55 15	163 238 4·058	h m s
57 53	·033	16 59 28·1
17 0 6	37 363 4·352	″
3 42	·223	5032·999

Reversed Position Circle.

Victoria and — 5°·5036. (n) (430)

Chronometer Time.	Readings of Scale or Position Circle.	Cape Sid. Time. — Distance or P. Angle.
17 6 20	37 363 4·152	h m s
13 49	3·984	17 14 7·4
17 11	163 238 4·671	″
18 13	·675	5028·739

Victoria and — 4°·4916. (r) (431)

Chronometer Time.	Readings of Scale or Position Circle.	Cape Sid. Time. — Distance or P. Angle.
17 21 59	145 255 4·107	h m s
23 6	3·983	17 23 58·6
24 23	54 345 4·574	″
25 30	·559	3631·202

Digitized by Google

1889, July 23. GILL—*continued.*

Victoria and — 4°·4916. (r) (432)

Chronometer Time.	Readings of Scale or Position Circle. Estimated	A	B	Cape Sid. Time. — Distance or P. Angle.
h m s	° ′	′ ″	′ ″	h m s
17 27 21	224 50	10 32	9 34	17 31 12·4
30 1		1 6	0 13	° ′ ″
32 22	224 59	9 24	8 27	224 54 36
34 9		9 59	9 2	

Victoria and — 5°·5036. (n) (433)

Chronometer Time.	Readings of Scale or Position Circle. Estimated	A	B	Cape Sid. Time. — Distance or P. Angle.
h m s	°	′ ″	′ ″	h m s
17 40 12	222 4	4 40	3 49	17 46 48·4
42 32		3 40	2 42	° ′ ″
49 41	221 57	7 25	6 35	41 59 45
53 52		5 47	4 53	

Reversed Position Circle.

Victoria and — 5°·5036. (n) (434)

Chronometer Time.	Readings of Scale or Position Circle.	A	B	Cape Sid. Time. — Distance or P. Angle.
h m s				h m s
17 57 2	41 56	5 51	5 0	18 1 36·6
59 20		5 10	4 18	° ′ ″
18 3 8	58	8 12	7 13	41 55 59
6 0		7 18	6 21	

Victoria and — 4°·4916. (r) (435)

Chronometer Time.	Readings of Scale or Position Circle.	A	B	Cape Sid. Time. — Distance or P. Angle.
h m s				h m s
18 10 41	45 13	3 8	2 20	18 15 25·6
14 28		5 0	4 3	° ′ ″
16 58	9 9	7 8	20	225 11 10
18 39		9 54	9 0	

Run + 0ˢ·014.
Correction for Coincidence of Position Circle Microscopes — 11″.
Chronometer Correction + 14ˢ·1.
I. 2–3; S. 2; Observations satisfactory.

	B	t	T
h m	in.	°	°
At 15 24	30·22	56·2	54·0
16 28	30·23	55·5	55·0
18 20	30·24	54·7	53·8

1889, July 23. AUWERS.

Victoria and — 4°·4883. (p) (436)

Chronometer Time.	Readings of Scale or Position Circle.	A	B	Cape Sid. Time. — Distance or P. Angle.
h m s	°	′	′	h m s
22 23 44	102	30·5	29·5	22 26 46·6
25 48		31·0	30·0	° ′ ″
27 36		19·0	18·0	102 24 7
29 1		18·0	17·0	

Rotated prism 90°.

Victoria and — 4°·4883. (p) (437)

Chronometer Time.	Readings of Scale or Position Circle.	A	B	Cape Sid. Time. — Distance or P. Angle.
h m s	°	′	′	h m s
22 30 7	102	18·5	18·0	22 32 9·6
31 20		19·0	18·0	° ′ ″
32 22		29·7	28·5	102 23 57
33 52		30·2	29·7	

Victoria and — 4°·4903. (q) (438)

Chronometer Time.	Readings of Scale or Position Circle.	A	B	Cape Sid. Time. — Distance or P. Angle.
h m s				h m s
22 38 44	111	45·0	44·0	22 40 36·1
39 24		45·5	44·5	° ′ ″
40 29 }		27·0	26·0 }	291 35 19
41 29 }		27·0	26·0 }	
42 20		26·0	24·5	

Rotated prism 90°.

Victoria and — 4°·4903. (q) (439)

Chronometer Time.	Readings of Scale or Position Circle.	A	B	Cape Sid. Time. — Distance or P. Angle.
h m s				h m s
22 44 51	111	26·2	25·0	22 47 35·1
45 36		24·0	23·0	° ′ ″
49 0		44·7	44·0	291 33 25
49 56		40·5	40·0	

Digitized by Google

Chronometer Time.	Readings of Scale or Position Circle.	Cape Sid. Time. — Distance or P. Angle.	Chronometer Time.	Readings of Scale or Position Circle.	Cape Sid. Time. — Distance or P. Angle.
1889, July 23. AUWERS—*continued.*					
	Victoria and — 4°·4903. (q) (440)			Victoria and — 4°·4903. (q) (441)	
h m s	Scale r	h m	h m s	Scale r	h m s
22 53 9	117 283 5·750	22 55 42·8	22 59 4	82 317 3·126	23 1 26·3
54 50	·599		23 0 45	·174	"
56 30	82 317 2·986	1369·681	1 51	117 283 5·341	1372·525
57 25	·991		3 8	·202	
	Rotated prism 90°.				
	Victoria and — 4°·4883. (p) (442)			Victoria and — 4°·4883. (p) (443)	
23 7 6	123 277 5·135	h m s	23 11 35	77 324 3·311	h m s
8 3	·105	23 9 2·1	13 42	·190	23 14 28·1
9 21	77 324 3·440	"	15 15	123 277 5·519	"
10 41	·328	1855·590	16 23	·578	1852·760
	Rotated prism 90°.			Reversed Position Circle.	
	Victoria and — 4°·4883. (p) (444)			Victoria and — 4°·4883. (p) (445)	
	° ′ ″	h m s		° ′ ″	h m s
23 19 36	282 40·2 39·0	23 22 5·1	23 24 53	282 25·0 24·0	23 26 46·6
20 24	39·5 38·0	° ′ ″	25 33	25·5 24·5	° ′ ″
23 22	25·5 24·5	102 31 49	27 20	41·7 40·5	102 32 39
24 1	24·3 23·5		28 23	40·5 39·5	
	Rotated prism 90°.				
	Victoria and — 4°·4883. (p) (446)			Victoria and — 4°·4883. (p) (447)	
	Scale r	h m s		Scale r	
23 29 41	123 278 2·284	23 32 18·8	23 35 55	77 324 1·919	h m s
30 52	·252	"	37 4	·940	23 39 2·6
32 52	77 324 2·126	1843·162	38 39	·854	"
34 53	1·960		40 4	123 278 2·817	1839·662
	Rotated prism 90°.		40 48	·850	
	Victoria and — 4°·4903. (q) (448)			Victoria and — 4°·4903. (q) (449)	
	° ′ ″	h m s		° ′	h m s
23 44 19	291 23·0 21·5	23 45 49·3	23 47 59	290 59·8 58·2	23 49 49·3
44 59	21·2 20·0	° ′ ″	48 42	56·5 55·5	° ′ ″
46 9	290 59·5 57·8	291 9 41	50 13	291 19·0 17·8	291 8 2
46 53	57·5 57·0		51 26	19·5 18·0	
	Rotated prism 90°.				

Digitized by Google

1889, July 23. AUWERS—*continued.*

Victoria and — 4°·4903. (q) (450)

Chronometer Time.	Readings of Scale or Position Circle.	Cape Sid. Time. Distance or P. Angle.
h m s	Scale r	h m s
23 52 53	117 283 2·837	23 54 59·1
53 59	·815	"
55 28	82 317 5·730	1398·029
56 39	·809	
	Rotated prism 90°.	

Victoria and — 4°·4903 (q) (451)

Chronometer Time.	Readings of Scale or Position Circle.	Cape Sid. Time. Distance or P. Angle.
h m s	Scale r	h m s
23 57 56	82 318 1·909	
59 26	2·001	
0 1 15	117 283 2·479	0 1 11·9
2 10	·479	"
3 10	·258	1401·149
3 45	·358	
4 44	·357	

	B	t	T
	h m	in	°	°
At	22 7	30·24	53·5	53·8
	0 7	30·235	53·4	54·0

Run + 0r·019.
Chronometer Correction + 14s·3.
Images till 23h 17m 2–3, then generally 3 till 0h, at last 4; very diffused (clouds coming up).
*Dr. Auwers combines the last 5 pointings as follows :—

Made with right hand motion.

h m s
At 0 1 15 quite diffused p ½.
0 3 45 better p 1.

Made with left hand motion.

h m s
At 0 2 10 diffused p ⅔.
3 10 do. p ⅔.
4 44 better p 1.

And combines with equal weight the results measured with the two opposite motions in distance.

1889, July 24. AUWERS.

Victoria and — 4°·4916. (r) (452)

Chronometer Time.	Readings of Scale or Position Circle.	Cape Sid. Time. Distance or P. Angle.
h m s	Scale r	h m s
15 42 25	49 352 3·630	15 44 47·2
43 47	·704	"
45 36	151 249 4·671	4104·798
46 23	·590	
	Rotated prism 90°.	

Victoria and — 4°·4916. (r) (453)

Chronometer Time.	Readings of Scale or Position Circle.	Cape Sid. Time. Distance or P. Angle.
h m s	Scale r	h m s
15 47 28	151 249 4·753	15 50 7·1
48 11	·624	"
49 19	·495	4106·853
51 2	49 352 4·114	
51 54	·024	

Victoria and — 5°·5036. (n) (454)

Chronometer Time.	Readings of Scale or Position Circle.	Cape Sid. Time. Distance or P. Angle.
h m s		h m s
16 44 36	42 358 2·911	16 46 48·0
45 37	·796	"
47 30	157 242 5·676	4616·813
48 31	·640	
	Rotated prism 90°.	

Victoria and — 5°·5036. (n) (455)

Chronometer Time.	Readings of Scale or Position Circle.	Cape Sid. Time. Distance or P. Angle.
h m s		h m s
16 49 16	157 242 5·693	16 50 56·8
49 51	·751	"
51 27	42 358 2·800	4616·175
52 15	·781	
	Reversed Position Circle.	

Victoria and — 5°·5036. (n) (456)

Chronometer Time.	Readings of Scale or Position Circle.	Cape Sid. Time. Distance or P. Angle.
h m s		h m s
16 54 27	42 358 2·619	16 56 42·7
55 25	·598	"
57 2	157 243 1·984	4613·915
58 1	·997	
58 58	2·019	
	Rotated prism 90°.	

Victoria and — 5°·5036. (n) (457)

Chronometer Time.	Readings of Scale or Position Circle.	Cape Sid. Time. Distance or P. Angle.
h m s		h m s
16 59 44	157 243 2·060	17 1 30·0
17 0 17	1·969	"
2 2	42 358 2·418	4612·940
2 59	·440	

Digitized by Google

1889, July 24. AUWERS—*continued.*

Victoria and — 4°·4916. (r) (458)

Chronometer Time.	Readings of Scale or Position Circle.	Cape Sid. Time. — Distance or P. Angle.
h m s	Scale r	h m s
17 10 24	48 352 3·437	17 11 55·3
11 3	·466	"
12 13	151 248 5·019	4142·029
13 3	4·961	
	Rotated prism 90°.	

Victoria and — 4°·4916. (r) (459)

Chronometer Time.	Readings of Scale or Position Circle.	Cape Sid. Time. — Distance or P. Angle.
h m s	Scale r	h m s
17 13 48	151 248 4·920	17 15 39·8
14 43	·902	"
16 5	48 352 3·608	4143·412
17 5	·688	

Run + 0r·017.
Chronometer Correction + 14s·5.

	h m	B in.	t °	T °
At	15 41	30·295	55·4	54·0
	17 19	30·30	54·7	53·5

Nearly 50m lost after the first observations of — 4°·4916 owing to an error in the computed setting for — 5°·5036, which was discovered and the star found at 16h 42m. The loss of time was compensated by considerable improvement of the images; 2–3 or less before, 2 and sometimes 1–2, exceptionally 3 afterwards.

1889, July 24. GILL.

Victoria and — 4°·4883. (p) (460)

Chronometer Time.	Estimated	A	B	Cape Sid. Time. — Distance or P. Angle.
h m s	° ′	′ ″	′ ″	h m s
22 24 22	108 21	1 30	0 47	22 29 13·5
26 52		2 34	1 47	° ′ ″
30 46	6	5 28	4 33	108 12 45
33 54		3 52	3 5	

Victoria and — 4°·4903. (q) (461)

Chronometer Time.	Estimated	A	B	Cape Sid. Time. — Distance or P. Angle.
h m s	° ′	′ ″	′ ″	h m s
22 38 58	105 4	4 57	4 8	22 43 11·0
41 46		1 56	1 4	° ′ ″
43 50	16	6 10	5 21	285 8 56
47 10		5 5	4 21	
		Reversed Position Circle.		

Victoria and — 4°·4903. (q) (462)

Chronometer Time.				Cape Sid. Time. — Distance or P. Angle.
h m s				h m s
22 53 12	285 15	5 40	4 48	22 57 23·0
55 47		4 30	3 31	° ′ ″
58 31	0	0 10	9 10	285 6 54
23 1 2		0 2	9 1	

Victoria and — 4°·4883. (p) (463)

Chronometer Time.				Cape Sid. Time. — Distance or P. Angle.
h m s				h m s
23 5 48	288 18	7 58	7 0	23 11 27·0
8 7		9 41	8 48	° ′ ″
14 33	42	2 42	1 49	108 30 26
16 20		4 3	3 0	

Victoria and — 4°·4883. (p) (464)

Chronometer Time.	Scale	r	Cape Sid. Time. — Distance or P. Angle.
h m s			h m s
23 18 54	114 286	3·755	23 23 28·5
20 46		·831	"
25 15	86 315	4·455	1145·822
27 59		·404	

Victoria and — 4°·4903. (q) (465)

Chronometer Time.	Scale	r	Cape Sid. Time. — Distance or P. Angle.
h m s			h m s
23 33 22	74 327	2·007	23 36 16·8
34 50		·043	"
36 39	126 275	2·430	2083·307
39 16		·240	
	Reversed Position Circle.		

Digitized by Google

Chronometer Time.	Readings of Scale or Position Circle.	Cape Sid. Time. — Distance or P. Angle.	Chronometer Time.	Readings of Scale or Position Circle.	Cape Sid. Time. — Distance or P. Angle.
	1889, July 24. GILL—*continued.*				
	Victoria and — 4°·4903. (q) (466)			Victoria and — 4°·4883. (p) (467)	
h m s	Scale r	h m s	h m s	Scale r	h m s
23 44 40	126 275 2·044	23 50 6·0	0 5 20	86 315 2·362	0 7 25·0
46 48	1·870	″	6 10	·411	″
52 57	74 327 2·863	2089·555	7 11	114 287 2·366	1122·439
54 59	·915		9 59	·480	

Run + 0ᵐ·014.
Chronometer Slow + 15ˢ·0.
Correction for Coincidence of Position Circle Microscopes — 12″.
During Position Angle Measures I. 2–3 ; S. 2–3.
„ 464 and 465 I. 3 ; S. 3.
„ 466 I. 4 ; S. 4.
„ 467 Mere guesses.

	B	t	T
h m	in.	°	°
At 22 20	30 30	51·5	50·4
0 12	30 29	51·0	50·0

	1889, July 25. GILL.				
	Victoria and — 4°·4883. (p) (468)			Victoria and — 4°·4883. (p) (469)	
	A B				
h m s	° ′ ′	h m s	h m s	° ′ ′	h m s
15 26 40	119 33·0 32·5	15 28 40·7	15 31 29	119 0·5 0·0	15 33 35·9
27 44	31·0 30·5	° ′ ″	32 44	0·5 0·0	° ′ ″
28 59	118 57·0 56·5	119 14 49	33 58	40·5 40·0	119 20 30
30 14	59·0 59·0		35 7	41·5 41·0	
	Rotated prism 90°.				
	Victoria and — 4°·4883. (p) (470)			Victoria and — 4°·4883. (p) (471)	
15 37 6	119 44·5 44·0	h m s	15 42 14	119 14·5 13·5	h m s
37 55	43·0 42·5	15 39 17·7	46 53	16·0 15·5	15 47 56·2
39 53	9·5 9·0	° ′ ″	50 10	56·5 55·5	° ′ ″
41 11	10·0 9·5	119 26 30	51 22	58·5 58·0	119 36 0
	Rotated prism 90°.				
	Standard Stars. (472)			Victoria and — 4°·4883. (p) (473)	
15 57 32	° ′ ′ ″ ′ ″	h m s	16 8 14	299 44·5 43·5	h m s
59 28	97 52 2 11 1 20	16 0 48·2	11 22	50·5 49·5	16 12 39·4
16 1 49	1 27 0 30	° ′ ″	14 5	300 22·0 21·5	° ′ ″
3 18	48 7 40 6 42	97 48 56	15 51	25·5 24·5	120 5 11
	7 2 6 8			Rotated prism 90°.	
	Reversed Position Circle.				

Digitized by Google

Chronometer Time.	Readings of Scale or Position Circle.	Cape Sid. Time. / Distance or P. Angle.
	1889, July 25. GILL—*continued.*	
	Victoria and — 4°·4883. (p) (474)	
h m s	° ′ ″	h m s
16 17 35	300 28·0 27·5	16 20 55·4
19 16	30·5 30·0	° ′ ″
21 30	299 59·0 58·0	120 14 49
24 15	300 3·0 2·5	
	Victoria and — 4°·4883. (p) (475)	
h m s	° ′ ″	h m s
16 27 4	300 5·5 5·0	16 29 19·4
28 12	11·5 10·5	° ′ ″
29 33	43·5 43·0	120 25 37
31 23	43·5 42·5	
	Rotated prism 90°.	
	Victoria and — 4°·4883. (p) (476)	
16 42 19	300 25·0 24·0	h m s
43 36	29·5 28·5	16 44 37·7
45 18	301 2·5 2·0	° ′ ″
46 12	2·5 1·5	120 44 26
	Victoria and — 4°·4883. (p) (477)	
	Scale r	h m s
16 47 49	108 292 2·214	16 50 54·4
49 27	·286	″
50 54	91 309 2·122	680·646
54 22	1·992	
	Rotated prism 90°.	
	Victoria and — 4°·4883. (p) (478)	
	Scale r	m
16 56 54	91 309 1·910	17 3 5·2
58 52	·814	″
17 6 17	108 292 3·006	675·504
9 12	·148	
	Reversed Position Circle.	
	Victoria and — 4°·4883. (p) (479)	
17 15 17	108 292 3·500	h m s
16 40	·466	17 18 17·2
18 54	91 308 4·887	″
21 12	·710	668·156
	Rotated prism 90°.	
	Victoria and — 4°·4883. (p) (480)	
17 25 59	91 308 4·497	h m s
27 15	·422	17 28 52·3
29 1	108 292 4·050	
31 31 }	·200	663·189
32 46 }	·226	
	Standard Stars. (481)	
17 35 43	180 220 2·388	h m s
40 3	·380	17 45 2·2
49 11	19 381 2·169	″
54 6	·110	6454·030

	B	t	T
h m	in.	°	°
At 15 20	30·36	53·5	52·3
17 56	30 36	53·0	52·5

Run + 0ᵈ·016.
Correction for coincidence of Position Circle Microscopes — 11″.
Chronometer Correction + 16ˢ·4.
During 468–471 I. 2 ; S. 2.
„ 472 I. 2–3 ; S. 2–3.
„ 473–476 I. 3 ; S. 3.
„ 477–480 Images variable, sometimes 2, sometimes more than 3, sometimes faint, with much interruption by clouds.
„ 481 Observations made with great difficulty through clouds, I. and S. 3–4. Pointings made under most unfavourable circumstances at 17ʰ 44ᵐ 53ˢ and 45ᵐ 25ˢ are rejected, as they were afterwards repeated under more favourable circumstances at 49ᵐ 11ˢ and 54ᵐ 6ˢ.

Digitized by Google

Chronometer Time.	Readings of Scale or Position Circle.	Cape Sid. Time. — Distance or P. Angle.	Chronometer Time.	Readings of Scale or Position Circle.	Cape Sid. Time. — Distance or P. Angle.
	1890, July 25. AUWERS.				
	Victoria and — 4°·4883. (p) (482)			Victoria and — 4°·4883. (p) (483)	
h m s	Scale r	h m s	h m s	Scale r	h m s
22 9 29	106 293 4·211	22 12 34·5	22 15 28	93 307 4·150	22 17 28·2
11 53	·159	"	16 11	3·982	"
13 24	93 307 4·300	541·195	17 55	106 293 4·582	538·695
14 23	·053		19 10	·561	
	Rotated prism 90°.				
	Victoria and — 4°·4883. (p) (484)			Victoria and — 4°·4883. (p) (485)	
22 20 21	106 293 4·698	h m s	22 25 39	93 307 3·760	h m s
21 44	·732	22 22 45·7	26 55	·600	° 22 28 0·0
23 18	93 307 3·812	"	28 35	106 293 5·026	"
24 31	·688	536·382	29 42	·010	534·507
	Rotated prism 90°.				
	Victoria and — 4°·4883. (p) (486)			Victoria and — 4°·4883. (p) (487)	
	° ′ ″	h m s		° ′ ″	h m s
22 32 21	130 50·0 50·0	22 34 4·5	22 35 54	130 8·0 7·5	22 37 26·5
33 15	59·0 58·5	° ′ ″	36 38	8·5 7·7	° ′ ″
34 27	5·5 4·5	130 29 52	37 39	131 6·0 4·8	130 37 45
35 6	6·0 5·5		38 26	10·0 9·5	
	Rotated prism 90°.			Reversed Position Circle.	
	Victoria and — 4°·4883. (p) (488)			Victoria and — 4°·4883. (p) (489)	
22 41 29	311 15·5 14·5	h m s	22 45 35	310 26·0 24·5	
42 43	16·0 15·2	22 43 23·7	47 14	40·0 39·2	h m s
43 50	310 27·0 26·0	° ′ ″	48 11	33·0 32·0	22 49 36·5
44 24	25·5 24·3	130 50 30	49 2	36·0 35·0	° ′ ″
	Rotated prism 90°.		50 38	311 30·5 29·7	131 1 0
			51 38	28·0 27·0	
	Victoria and — 4°·4883. (p) (490)			Victoria and — 4°·4883. (p) (491)	
	Scale r			Scale r	
22 54 3	106 294 2·107	h m s	22 58 46	93 307 2·419	
54 55	·045	22 55 51·5	59 45	·255	h m s
56 13	93 307 2·479	"	23 0 46	·126	23 2 2·9
57 6	·378	522·950	1 25	·236	"
	Rotated prism 90°.		2 56	106 294 2·300	520·891
			3 46	·332	

Digitized by Google

Chronometer Time.	Readings of Scale or Position Circle.	Cape Sid. Time. — Distance or P. Angle.	Chronometer Time.	Readings of Scale or Position Circle.	Cape Sid. Time. — Distance or P. Angle.
1890, July 25. AUWERS—*continued*.					
	Victoria and — 4°·4883. (p) (492)			Victoria and — 4°·4883. (p) (493)	
h m s	Scale r	h m s	h m s	Scale r	h m s
23 5 58	106 294 2·590	23 8 30·5	23 11 51	93 306 5·727	23 13 48·2
7 4	·519	"	12 38	·609	"
9 31	93 307 1·927	517·623	14 5	106 294 2·788	515·739
10 20	306 5·753		15 30	·740	
	Rotated prism 90°.				
Run + 0ᵐ·016.				B t T	
Chronometer Correction + 17ˢ·2.				h m in. ° °	
During 482–485 I. 3–4 ; 486–493 I. 4.			At	22 0 30·365 51·3 50·4	
				23 18 30·35 50·3 48·6	
1889, July 26. AUWERS.					
	Victoria and — 4°·4883. (p) (494)			Victoria and — 4°·4883. (p) (495)	
	A B			A B	
h m s	° ′ ′	h m s	h m s	° ′ ′	h m s
15 19 45	11 18·0 17·0	15 22 16·9	15 27 8	12 4·5 4·0	15 29 2·1
21 7	9·0 7·2	° ′ ″	28 30	5·0 4·5	° ′ ″
22 31	42·5 41·3	191 26 34	29 16	11 50·5 49·5	191 55 50
24 34	39·5 38·0		30 4	44·5 44·2	
	Rotated prism 90°.			Reversed Position Circle.	
	Victoria and — 4°·4883. (p) (496)			Victoria and — 4°·4883. (p) (497)	
15 32 28	192 10·5 10·0	h m s	15 36 11	193 3·0 2·5	h m s
33 21	10·0 9·0	15 34 9·9	36 47	192 57·0 56·5	15 37 47·1
34 29	53·0 52·0	° ′ ″	37 58	28·5 27·3	° ′ ″
35 11	45·3 44·8	192 29 19	39 2	27·0 26·5	192 43 32
	Rotated prism 90°.				
	Victoria and — 4°·4883. (p) (498)			Victoria and — 4°·4883. (p) (499)	
	Scale r			Scale r	
15 40 17	95 304 5·060	h m s	15 45 54	104 296 3·505	h m s
41 13	4·944	15 42 39·4	46 44	·388	15 48 0·5
43 16	104 296 3·507	"	48 15 }	95 304 5·095 }	"
44 41	·468	348·436	49 37 }	·149 }	349·209
	Rotated prism 90°.		50 20 }	·119 }	
	Standard Stars. (500p)			Standard Stars. (500s)	
	° ′ ′ ″ ′ ″				
15 54 33	277 47 7 50 6 52	h m s	15 58 0	19 381 2·023	h m s
56 25	7 6 6 8	15 59 18·6	58 52	1·949	15 59 41·9
16 1 31	277 52 11 42 10 46	° ′ ″	16 0 5	180 220 2·552	"
3 35	11 40 10 44	277 48 56	0 40	·492	6452·562

Digitized by Google

Chronometer Time.	Readings of Scale or Position Circle.	Cape Sid. Time. — Distance or P. Angle.	Chronometer Time.	Readings of Scale or Position Circle.	Cape Sid. Time. — Distance or P. Angle.
1889, July 26. AUWERS—*continued*.					
	Victoria and — 4°·4883. (p) (501)			Victoria and — 4°·4883. (p) (502)	
h m s	Scale r	h m s	h m s	Scale r	
16 11 0	104 296 3·271	16 12 42·1	16 15 0	95 304 5·493	
11 48	·144	"	15 48	·448	h m s
12 47	95 304 5·504	352·188	16 50	·436	16 17 54·4
14 3	·430		17 28	·460	"
	Rotated prism 90°.		18 33	104 296 3·075	352·802
			19 21	·081	
	Victoria and — 4°·4883. (p) (503)			Victoria and — 4°·4883. (p) (504)	
16 20 50	104 296 3·060	h m s	16 25 10	95 304 5·612	
22 12	·047	16 22 50·1	26 41	·647	h m s
23 11	95 304 5·571	"	28 36	104 296 2·996	16 28 0·0
23 57	·572	353·489	29 34	·916	"
	Rotated prism 90°.		30 13	·891	354·404

	B	t	T
	h m	in.	°	°
At	15 11	30·32	55·2	54·5
	16 32	30·35	54·0	52·1

Run + 0ᵈ·019.
Chronometer Correction + 17ˢ·6.
During 494-497 I. 2-3; 498-500 I. 3; 501-503 I. 3-4; 504 I. 4.
Correction for Coincidence of Position Circle Microscopes — 10″.

1889, July 26. GILL.					
	Victoria and — 4°·4883. (p) (505)			Victoria and — 4°·4883. (p) (506)	
h m s	Scale r	h m s	h m s	Scale r	
22 9 18	105 295 2·570	22 13 39·7	22 19 41	94 306 2·422	
12 44	·338	"	21 3	·340	h m s
14 50	94 306 2·138	439·600	22 28	·384	22 24 48·8
16 37	·200		26 43	105 295 2·104	"
	Rotated prism 90°.		29 56	1·924	442·940
				Reversed Position Circle.	
	Victoria and — 4°·4883. (p) (507)			Victoria and — 4°·4883. (p) (508)	
22 36 0	105 294 5·651	h m s	22 48 30	94 306 3·244	
37 8	·699	22 39 50·2	49 26	·322	m s
39 50	94 306 2·931	"	52 18	105 294 5·102	22 51 15·7
45 13	3·092	447·643	53 39	·102	"
	Rotated prism 90°.				451·898

Digitized by Google

Chronometer Time.	Readings of Scale or Position Circle.	Cape Sid. Time. — Distance or P. Angle.	Chronometer Time.	Readings of Scale or Position Circle.	Cape Sid. Time. — Distance or P. Angle.
1889, July 26. GILL—*continued.*					
	Standard Stars. (509)			Standard Stars. (510)	
h m s	Scale r	h m s	h m s	° ′ ″ ″ ′ ″	h m s
22 58 39	180 220 2·478	23 3 0·2	23 8 25	277 45 5 25 4 30	23 15 26·9
59 45	·736	″	12 21	4 38 3 32	° ′ ″
23 5 43	19 380 5·865	6451·385	17 33	50 9 53 8 50	277 47 2
6 44	·785		22 19	0 54 9 55	

Run + 0s·018.
Chronometer Correction + 17s·4.
Correction for Coincidence of Position Circle Microscopes — 10″.
During 505 I. 3–4, afterwards gradually becoming worse, till it became so bad that it was impossible to continue observations.
Observations very slow, because had to wait for moments of possible observation.—Whole set most unsatisfactory.

	B	t	T
h m	in.	°	°
At 22 5	30·39	52·0	53·0
23 30	30·40	52·0	50·8

1889, July 27. GILL.

	Victoria and — 4°·4883. (p) (511)			Victoria and 4°·4883. (p) (512)	
h m s	Scale r	h m s	h m s	Scale r	h m s
15 37 43	110 290 2·980	15 40 57·9	15 46 9	89 310 5·820	15 49 26·4
39 49	·909	″	47 38	·918	″
41 55	89 310 5·600	835·515	51 1	110 290 2·414	839·594
43 14	·682		51 47	·311	
	Rotated prism 90°.			Reversed Position Circle.	
	Victoria and 4°·4883. (p) (513)			Victoria and — 4°·4883. (p) (514)	
16 2 11	110 289 5·809	h m s	16 10 55	89 311 3·024	h m s
5 55	·661	16 6 19·9	13 0	·023	16 15 41·9
7 14	89 311 2·847	″	18 11	110 289 5·096	″
8 49	·858	847·519	19 31	·068	851·666
	Rotated prism 90°.				
	Standard Stars. (515)			Standard Stars. (516)	
16 22 48	180 220 2·444	h m s	16 32 17	° ′ ″ ″ ′ ″	h m s
24 17	·393	16 26 4·1	34 41	277 47 7 6 6 7	16 36 24·4
26 52	19 381 1·988	″	37 55	7 10 6 9	° ′ ″
29 9	·986	6453·088	39 34	50 0 48 9 51	277 48 15
				0 40 9 44	
	Victoria and — 4°·4883. (p) (517)			Victoria and — 4°·4883. (p) (518)	
	° ′ ′	h m s		° ′ ′	
16 45 19	246 42·5 41·5	16 47 5·9	16 49 37	246 24·5 23·5	h m s
46 10	47·5 46·5	° ′ ′	50 56	24·0 23·0	16 51 46·6
47 22	21·0 20·0	246 32 34	52 9	50·0 49·0	° ′ ″
48 31	21·0 20·5		53 14	51·5 50·5	246 37 0
	Rotated prism 90°.				

Digitized by Google

1889, July 27. GILL—*continued.*

Victoria and — 4°·4883. (p) (519)

Chronometer Time.	Readings of Scale or Position Circle.	Cape Sid. Time. — Distance or P. Angle.
h m s	° ′ ″	h m s
16 55 0	246 52·5 52·0	16 57 15·9
56 7	53·5 52·0	° ′ ″
57 50	30·5 29·5	246 41 26
58 56	31·0 30·5	

Rotated prism 90°.

Victoria and — 4°·4883. (p) (520)

Chronometer Time.	Readings of Scale or Position Circle.	Cape Sid. Time. — Distance or P. Angle.
h m s	° ′ ″	h m s
17 0 24	246 33·0 32·0	17 2 56·4
1 22	34·0 33·0	° ′ ″
3 50	57·0 56·5	246 45 19
4 59	59·0 58·0	

Standard Stars. (521)

h m s	° ′ ′ ″ ′ ″	h m s
17 8 25	277 50 0 34 9 44	17 13 20·1
11 3	0 16 9 20	° ′ ″
14 34	46 6 52 5 56	277 47 59
18 8	6 53 5 57	

Run + 0ᵐ·017.
Correction for Coincidence of Position Circle Microscopes — 12″.
Chronometer Correction + 17ˢ·6.
During distances I. 2 and 2-3; S. 3; rather faint and difficult, but by patience observations satisfactory.
Position Angles I. 2; S. 2; much brighter, very satisfactory.

	B	t	T
h m	in.	°	°
At 15 35	30 49	53·8	51·5
17 20	30 51	52·5	51·8

1889, July 27. AUWERS.

Victoria and — 4°·4883. (p) (522)

Chronometer Time.	Readings of Scale or Position Circle.	Cape Sid. Time. — Distance or P. Angle.
h m s	A B ° ′ ′	h m s
21 55 56	249 41·5 40·5	21 59 11·5
57 58	37·0 35·5	° ′ ″
22 0 17	250 12·0 11·2	249 53 40
1 21	14·2 13·0	

Rotated prism 90°.

Victoria and — 4°·4883. (p) (523)

Chronometer Time.	Readings of Scale or Position Circle.	Cape Sid. Time. — Distance or P. Angle.
h m s	A B ° ′ ′	h m s
22 2 50	250 16·3 15·0	22 5 14·8
4 0	13·0 11·5	° ′ ″
5 50	249 44·7 43·7	249 59 16
7 5	45·5 44·5	

Reversed Position Circle.

Victoria and — 4°·4883. (p) (524)

h m s	° ′ ′	h m s
22 10 36	69 50·0 49·0	22 12 54·8
11 44	48·5 47·5	° ′ ″
13 38	70 17·0 15·5	250 1 51
14 27	14·3 13·0	

Rotated prism 90°.

Victoria and — 4°·4883. (p) (525)

Chronometer Time.	Readings of Scale or Position Circle.	Cape Sid. Time. — Distance or P. Angle.
h m s	° ′ ′	h m s
22 15 39	70 21·5 20·5	22 18 1·5
16 39	17·0 15·5	° ′ ″
18 23	69 56·3 55·0	250 6 49
20 11	55·0 53·8	

Digitized by Google

Chronometer Time.	Readings of Scale or Position Circle.	Cape Sid. Time. — Distance or P. Angle.	Chronometer Time.	Readings of Scale or Position Circle.	Cape Sid. Time. — Distance or P. Angle.
1889, July 27. AUWERS—*continued.*					
	Standard Stars. (526)			**Standard Stars. (527)**	
h m s	° ′ ′ ″ ′ ″	h m s	h m s	Scale r	h m s
22 27 35	97 46 5 50 5 5	22 32 3·0	22 39 8	180 220 2·572	22 41 29·5
29 58	5 0 4 20	° ′ ′	40 0	·560	″
33 3	50 10 14 9 39	97 47 16	42 22	19 381 1·989	6452·342
36 22	10 10 9 25		43 14	·983	
	Victoria and — 4°·4883. (p) (528)			**Victoria and — 4°·4883. (p) (529)**	
	Scale r	h m s			h m s
22 49 4	87 313 5·745	22 51 38·3	22 56 18	113 288 2·333	22 58 53·5
50 19	·737	″	57 49	·462	″
52 0 }	113 288 2·593 }	1038·456	59 35	87 314 2·255	1041·842
53 13 }	·492 }		23 0 38	·318	
54 39 }	·478 }				
	Rotated prism 90°.			**Reversed Position Circle.**	
	Victoria and — 4°·4883. (p) (530)			**Victoria and — 4°·4883. (p) (531)**	
23 3 50	87 314 2·366	h m s	23 11 59	113 287 5·660	h m s
4 44	·457	23 6 52·8	13 2	·705	23 13 55·3
6 59 }	113 288 1·968 }	″	14 11	87 314 2·908	″
8 18 }	287 5·728 }	1045·351	15 15	·910	1048·506
9 25 }	·803 }				
10 44 }	·757 }				
	Rotated prism 90°.				

	B	t	T
h m	in.	°	°
At 21 45	30·50	51·7	52·1
23 16	30·46	52·0	52·2

Run + 0ʳ·015.
Correction for Coincidence of Position Circle Microscopes — 0′ 12″.
Chronometer Correction + 18ˢ·5.
During 522–525 I. 3, sometimes 2–3.
„ 526–527 I. 3.
Images suddenly became very bad after 22ʰ 52ᵐ and continued 4 to the end. Observations then very unsatisfactory.

1889, July 28. AUWERS.					
	Victoria and — 4°·4883. (p) (532)			**Victoria and — 4°·4883. (p) (533)**	
h m s	Scale r	h m s	h m s	Scale r	h m s
15 36 27	118 282 3·140	15 38 31·4	15 40 56	81 318 5·472	15 42 52·9
37 27	·112	″	41 48	·405	″
39 1	81 318 5·351	1474·658	43 10	118 282 2·787	1476·880
39 57	·343		44 24	·766	
	Rotated prism 90°.				

Digitized by Google

Chronometer Time.	Readings of Scale or Position Circle.	Cape Sid. Time. — Distance or P. Angle.	Chronometer Time.	Readings of Scale or Position Circle.	Cape Sid. Time. — Distance or P. Angle.
	1889, July 28. AUWERS—*continued.*				
	Victoria and — 4°·4861. (m) (534)			Victoria and — 4°·4861. (m) (535)	
h m s	Scale r	h m s	h m s	Scale r	h m s
15 47 43	129 271 3·696	15 49 15·7	15 50 56	70 329 4·595	15 52 54·2
48 29	·610	"	51 37	·599	"
49 26	70 329 4·718	2350·589	53 20	129 271 3·817	2349·221
50 11	·586		54 30	·922	
	Rotated prism 90°.			Reversed Position Circle.	
	Victoria and — 4°·4861. (m) (536)			Victoria and — 4°·4861. (m) (537)	
15 58 49	129 271 4·083	h m s	16 4 4	71 330 4·156	h m s
59 32	·121	16 0 57·9	4 52	·098	16 5 49·7
16 1 17	71 330 4·288	"	6 12	129 271 4·508	"
3 0	·237	2346·341	6 57	·436	2343·795
	Rotated prism 90°.				
	Victoria and — 4°·4883. (p) (538)			Victoria and — 4°·4883. (p) (539)	
16 10 0	118 281 5·606	h m s	16 13 51	81 319 3·087	h m s
11 11	·485	16 11 57·7	14 26	·095	16 15 19·7
12 20	81 319 3·040	"	15 31	118 281 5·370	"
13 6	2·982	1490·703	16 17	·240	1492·317
	Rotated prism 90°.				
	Victoria and — 4°·4883. (p) (540)			Victoria and — 4°·4883. (p) (541)	
	° ′ ′	h m s		° ′ ′	h m s
16 18 56	256 4·5 3·5	16 21 14·4	16 23 49	255 48·5 47·0	16 25 53·5
20 15	3·5 2·7	° ′ ″	24 56	46·5 46·0	° ′ ″
21 50	255 46·5 46·0	255 54 59	26 22	256 4·7 3·8	255 56 0
22 43	47·0 46·2		27 13½	6·0 5·5	
	Rotated prism 90°.				
	Victoria and — 4°·4861. (m) (542)			Victoria and — 4°·4861. (m) (543)	
16 30 47	248 46·7 45·7	h m s	16 35 18	248 36·3 35·8	h m s
31 47	46·5 45·7	16 32 50·7	36 26	35·2 34·7	16 37 35·7
33 7	36·0 35·5	° ′ ″	38 16	45·2 44·8	° ′ ″
34 28	36·0 35·2	68 40 55	39 9	44·5 44·0	68 40 4
	Rotated prism 90°.			Reversed Position Circle.	
	Victoria and — 4°·4861. (m) (544)			Victoria and — 4°·4861. (m) (545)	
16 41 54	68 45·0 44·4	h m s	16 47 2	68 32·0 31·5	h m s
42 54	45·2 44·6	16 44 15·9	49 4	43·0 42·5	16 50 39·7
44 58	33·5 33·0	° ′ ″	50 19	43·5 42·8	° ′ ″
46 4	32·5 31·7	68 38 44	55 0	31·0 30·0	68 37 2
	Rotated prism 90°.				

Digitized by Google

1889, July 28. AUWERS—*continued.*

Victoria and — 4°·4883. (p) (546)

Chronometer Time.	Readings of Scale or Position Circle.	Cape Sid. Time. — Distance or P. Angle.
h m s	° ′ ″	h m s
16 57 51	75 54·0 53·5	17 0 7·4
58 57	54·8 54·2	° ′ ″
17 0 45	76 14·7 13·7	256 4 12
1 43	14·7 14·0	

Rotated prism 90°.

Victoria and — 4°·4883. (p) (547)

Chronometer Time.	Readings of Scale or Position Circle.	Cape Sid. Time. — Distance or P. Angle.
h m s	° ′	h m s
17 2·45	76 14·7 14·2	17 5 14·4
4 15	13·5 12·5	° ′ ″
5 55	75 55·5 55·2	256 4 31
6 49	55·5 55·0	

Run + 0ᵀ·019.
Chronometer Correction + 18ˢ·4.
I. 2–3 generally; sometimes 2, sometimes 3.

	h m	B in.	t °	T °
At	15 23	30·29	56·5	54·0
	17 9	30·26	55·0	53·7

1889. July 28. GILL.

Victoria and — 4°·4883. (p) (548)

Chronometer Time.	Readings of Scale or Position Circle. A	Readings of Scale or Position Circle. B	Cape Sid. Time. — Distance or P. Angle.
h m s	° ′	′ ″ ′ ″	h m s
21 48 23	76 53	4 8 3 18	21 53 17·5
51 16		4 14 3 24	° ′ ″
54 20	77 10	10 10 9 28	257 1 43
57 57		10 39 9 52	

Rotated prism 90°.

Victoria and — 4°·4883. (p) (549)

Chronometer Time.	Readings of Scale or Position Circle. A	Readings of Scale or Position Circle. B	Cape Sid. Time. — Distance or P. Angle.
h m s	° ′	′ ″ ′ ″	h m s
22 5 36	77 15	4 39 3 53	22 9 13·8
7 29		4 8 3 22	° ′ ″
9 42	76 59	9 8 8 24	257 6 51
12 54		9 50 8 52	

Victoria and — 4°·4861. (m) (550)

Chronometer Time.	Readings of Scale or Position Circle.	Cape Sid. Time. — Distance or P. Angle.
h m s	° ′ ″	h m s
22 22 2	67 7 6 58 6 0	22 27 17·0
25 52	4 41 3 38	° ′ ″
28 16	18 7 41 6 40	67 10 35
31 44	5 48 4 48	

Rotated prism 90°.

Victoria and — 4°·4861. (m) (551)

Chronometer Time.	Readings of Scale or Position Circle.	Cape Sid. Time. — Distance or P. Angle.
h m s	° ′ ″	h m s
22 33 56	67 17 6 35 5 43	22 39 28·8
35 58	5 2 4 6	° ′ ″
40 48	0 10 26 9 29	67 7 12
45 59	9 20 8 23	

Reversed Position Circle.

Victoria and — 4°·4861. (m) (552)

Chronometer Time.	Readings of Scale or Position Circle. Scale	r	Cape Sid. Time. — Distance or P. Angle.
h m s			h m s
22 57 47	73 327	5·169	23 1 26·3
59 43		·024	″
23 2 5	127 274	3·457	2152·819
4 56		·642	

Victoria and — 4°·4883. (p) (553)

Chronometer Time.	Readings of Scale or Position Circle. Scale	r	Cape Sid. Time. — Distance or P. Angle.
h m s			h m s
23 10 5	121 279	5·460	23 15 33·5
11 59		·370	″
13 1	79 322	3·141	1694·097
25 55		·757	

Rotated prism 90°.

Digitized by Google

1889, July 28. GILL—*continued.*

Victoria and — 4°·4883. (p) (554)

Chronometer Time.	Readings of Scale or Position Circle.	Cape Sid. Time. — Distance or P. Angle.
h m s	Scale r	h m s
23 35 35	79 322 4·281	23 37 44·5
36 35	·261	"
38 8	121 279 4·068	1705·087
39 26	·040	

Victoria and — 4°·4861. (m) (555)

Chronometer Time.	Readings of Scale or Position Circle.	Cape Sid. Time. — Distance or P. Angle.
h m s	Scale r	h m s
23 44 57	126 273 5·448	23 50 5·3
49 11	·732	"
51 13	73 327 2·711	2130·326
52 49	·705	
54 43	·536	

Victoria and — 4°·4861. (m) (556)

Chronometer Time.	Readings of Scale or Position Circle.	Cape Sid. Time. — Distance or P. Angle.
h m s	° ′ ′ ″ ′ ″	h m s
23 57 29	246 37 7 20 6 7	0 2 2·0
59 59	5 49 4 42	° ′ ″
0 3 10	50 10 17 9 14	66 42 42
6 16	10 17 9 20	

Victoria and — 4°·4883. (p) (557)

Chronometer Time.	Readings of Scale or Position Circle.	Cape Sid. Time. — Distance or P. Angle.
h m s	° ′ ′ ″ ′ ″	h m s
0 11 19	257 36 6 19 5 10	0 16 6·5
14 27	4 51 3 45	° ′ ″
16 53	16 5 33 4 25	257 25 0
20 33	6 16 5 10	

	B	t	T
	h m	in	°
At	21 45	30·12	51·0
	0 23	30·04	47·5

Run + 0ʳ·018.
Chronometer Correction + 18ˢ·5.
Correction for coincidence of Position Circle Microscopes — 11″.
During 548 and 549 I. 2–3 : After 22ʰ 46ᵐ definition became suddenly so bad that observations were absolutely stopped for some time. After
550 and 551 I. 3–4 : waiting for some time images improved, but measures sometimes much delayed by impossible condition of
552 – 555 I. 4. images.
556 and 557 I. 3–4. Definition greatly improved during last Position Angles.

1889, July 29. GILL.

Victoria and — 4°·4877. (o) (558)

Chronometer Time.	Readings of Scale or Position Circle.	Cape Sid. Time. — Distance or P. Angle.
h m s	Scale r	h m s
15 28 30	122 [279]*2·465	15 31 20·4
30 5	·416	"
32 7	78 323 2·161	1762·848
33 25	·203	

Rotated prism 90°.

Victoria and — 4°·4877. (o) (559)

Chronometer Time.	Readings of Scale or Position Circle.	Cape Sid. Time. — Distance or P. Angle.
h m s	Scale r	h m s
15 34 37	78 323 2·160	15 36 35·6
35 49	·245	"
36 52	122 279 2·140	1764·411
37 50	·160	

Victoria and — 4°·4861. (m) (560)

Chronometer Time.	Readings of Scale or Position Circle.	Cape Sid. Time. — Distance or P. Angle.
h m s		h m s
15 46 22	122 279 4·199	15 48 51·9
47 42	·222	"
49 26	78 322 4·075	1743·224
50 43	·001	

Rotated prism 90°.

Victoria and — 4°·4861. (m) (561)

Chronometer Time.	Readings of Scale or Position Circle.	Cape Sid. Time. — Distance or P. Angle.
h m s		h m s
15 53 47	78 322 3·966	16 1 12·2
55 38	·810	"
57 57	·731	1738·563
16 5 39	121 278 4·943	
7 21	·982	

Digitized by Google

1889, July 29. GILL—*continued.*

Victoria and 4°·4861. (m) (562)

Chronometer Time.	Readings of Scale or Position Circle.	Cape Sid. Time. — Distance or P. Angle.
h m s	Scale r	h m s
16 13 4	121 278 5·309	16 15 32·1
14 14	·341	"
15 34	78 322 3·017	1732·183
18 2	2·908	
	Rotated prism 90°.	

Victoria and — 4°·4877. (o) (564)

16 31 25	122 278 4·215	16 33 49·9
32 43	·186	"
34 22	78 323 4·257	1784·636
35 35	·324	
	Rotated prism 90°.	

Victoria and — 4°·4861. (m) (563)

h m s	Scale r	m
16 21 39	78 322 2·805	16 24 2·4
22 33	·702	"
24 32	121 278 5·794	1728·669
26 11	·835	

Victoria and — 4°·4877. (o) (565)

16 38 6	78 323 4·395	h m s
38 35	·458	16 40 2·4
40 22	122 278 3·929	"
41 52	·857	1786·866

Run + 0ʳ·014.
Chronometer Correction + 18ˢ·6.
During 558–561 I. 3, and faint by haze.
562–565 I. 2–3 and brighter.
Note.—At 15ʰ 28ᵐ 30ˢ the Scales have apparently been read 122, 278, instead of 122, 279, as they should be.

	B	t	T
h m	in.	°	°
At 15 25	29·78	60·0	55·6
16 43	29·79	56·5	53·0

1889, July 31. AUWERS.

Victoria and — 4°·4861. (m) (566)

h m s	Scale r	h m s
22 1 23	108 291 4·413	22 7 4·4
7 10	·588	"
8 44	91 309 3·880	698·495
10 4	·853	
	Rotated prism 90°.	

Victoria and — 4°·4861. (m) (568)

	° ′ ″	h m s
22 16 36	190 13·5 12·3	22 18 37·9
17 48	9·0 7·5	° ′ ″
19 5	189 22·0 21·0	9 45 45
20 6	20·7 20·0	
	Rotated prism 90°.	

Victoria and — 4°·4861. (m) (570)

22 27 57 }	9 48·0 47·0 }	m s
30 26 } }	41·5 40·3 } }	22 33 31·2
32 21 }	36·0 35·0 }	° ′ ″
36 27	8 49·7 48·5	9 15 13
37 21	46·5 45·7	
	Rotated prism 90°.	

Victoria and — 4°·4861. (m) (567)

h m s	Scale r	h m s
22 11 11	91 309 3·959	22 13 25·9
12 38	·831	"
13 57	108 291 4·627	698·228
15 1	·537	

Victoria and — 4°·4861. (m) (569)

	° ′ ″	h m s
22 21 10	189 21·5 20·5	22 23 14·6
22 3	19·7 18·5	° ′ ″
23 59	189 56·0 55·0	9 37 55
24 50	56·5 55·7	
	Reversed Position Circle.	

Victoria and — 4°·4861. (m) (571)

22 38 38	8 45·0 44·0	h m s
39 50	44·0 43·0	22 41 24·1
41 39 }	9 15·3 14·7 }	° ′ ″
42 32 } }	14·0 13·0 } }	8 58 28
46 34 }	9·0 7·5 }	

Digitized by Google

1889, July 31. AUWERS—*continued.*

Victoria and — 4°·4861. (m) (572)

Chronometer Time.	Readings of Scale or Position Circle.	Cape Sid. Time. — Distance or P. Angle.
h m s	Scale r	h m s
22 48 3	108 291 5·046	22 50 3·1
49 1	·041	"
50 17	91 309 3·482	693·645
51 55	·411	
	Rotated prism 90°.	

Victoria and — 4°·4861. (m) (573)

Chronometer Time.	Readings of Scale or Position Circle.	Cape Sid. Time. — Distance or P. Angle.
h m s	Scale r	
22 53 9	91 309 3·497	
54 56	·360	h m s
55 49	·350	22 57 29·9
57 4	·388	"
58 54	108 291 5·127	692·759
59 40	·217	

Standard Stars. (574)

Chronometer Time.	Readings of Scale or Position Circle.	Cape Sid. Time. — Distance or P. Angle.
h m s		h m s
23 5 28	180 220 2·618	23 10 57·9
10 25	·595	"
13 10	19 381 1·878	6451·497
13 52	·840	

Standard Stars. (575)

Chronometer Time.	Readings of Scale or Position Circle.	Cape Sid. Time. — Distance or P. Angle.
h m s	° ′ ′ ″ ′ ″	h m s
23 14 52	277 45 5 8 4 14	23 17 58·4
16 45	4 18 3 18	° ′ ″
18 59	50 10 0 9 6	277 46 47
20 21	10 8 8 58	

Run + 0ᵐ·019.
Chronometer Correction + 14ˢ·1.

	h m	B in.	t °	T °
At	21 48	30·00	50·2	52·0
	23 23	30·03	52·0	51·6

Observations made between and through clouds, rather hurried, and sometimes pointings compensating in pairs.
Images not bad (2–3) except in some pointings, but Stars often faint or hardly seen. Screen 2 was used instead of screen 3 on the star, leaving the difference of brightness considerably too great; larger differences, therefore, between the two positions of the prism may be expected.
Correction for coincidence of Position Circle Microscopes — 0′ 7″.

1890, August 1. AUWERS.

During the day of August 1 the head of the Heliometer was dismounted, the segments of the object-glass were removed by Gill from their cells, and the semi-lenses separated, in order to remove rain-water which had got between the lenses during a rain squall on July 30, when a violent gust of wind had thrown open the dome. The lenses were thoroughly cleaned, as also the prism, and the brightness of the objects as seen through the telescope apparently greatly increased thereby.

Victoria and — 4°·4855. (k) (576)

Chronometer Time.	Readings of Scale or Position Circle. A	B	Cape Sid. Time. — Distance or P. Angle.
h m s	° ′	′	h m s
15 32 19	137 4·0	3·2	15 34 25·8
33 27	4·0	3·5	° ′ ″
35 5	136 4·5	4·2	136 34 10
35 52	5·2	4·8	
	Rotated prism 90°.		

Victoria and — 4°·4855. (k) (577)

Chronometer Time.	Readings of Scale or Position Circle. A	B	Cape Sid. Time. — Distance or P. Angle.
h m s	° ′	′	h m s
15 37 33	136 9·5	8·5	15 39 17·0
38 31	15·0	14·5	° ′ ″
39 35	137 14·3	14·0	136 42 55
40 29	14·0	13·5	

Victoria and — 4°·4861. (m) (578)

Chronometer Time.	Readings of Scale or Position Circle.	Cape Sid. Time. — Distance or P. Angle.
h m s		h m s
15 43 56	155 23·5 23·0	15 45 43·3
44 47	22·5 21·7	° ′ ″
46 7	154 7·0 6·2	334 43 22
47 3	2·0 1·0	
	Rotated prism 90°.	

Victoria and — 4°·4861. (m) (579)

Chronometer Time.	Readings of Scale or Position Circle.	Cape Sid. Time. — Distance or P. Angle.
h m s		h m
15 48 23	153 57·5 57·0	15 50 22·5
49 41	55·5 54·7	° ′ ″
50 53	155 10·5 ·7	334 32 16
51 33	7·0 6·2	
	Reversed Position Circle.	

Digitized by Google

Chronometer Time.	Readings of Scale or Position Circle.	Cape Sid. Time. — Distance or P. Angle.	Chronometer Time.	Readings of Scale or Position Circle.	Cape Sid. Time. — Distance or P. Angle.
1890, August 1. AUWERS—*continued.*					
	Victoria and — 4°·4861. (m) (580)			Victoria and — 4°·4861. (m) (581)	
h m s	° ′ ″	h m s	h m s	° ′ ″	h m s
15 53 49	335 8·0 7·0	15 55 57·6	16 9 12	333 14·0 13·5	16 10 42·5
54 42	6·0 5·0	° ′ ″	9 46	14·5 14·0	° ′ ″
55 58	333 38·5 37·0	334 19 47	11 6	334 37·0 36·0	333 53 56
57 13	31·5 30·5		11 46	31·5 31·0	
59 30	26·0 25·5				
	Rotated prism 90°.				
	Victoria and — 4°·4855. (k) (582)			Victoria and — 4°·4855. (k) (583)	
16 13 37	318 6·5 6·0	h m s	16 16 31	316 56·0 55·5	h m s
14 19	9·0 7·5	16 15 1·8	17 24	59·5 58·0	16 18 52·3
15 20	316 56·0 55·0	° ′ ″	18 22	58·5 57·0	° ′ ″
15 51	57·0 56·0	137 31 37	19 25	318 18·5 17·0	137 37 54
	Rotated prism 90°.		20·13	20·0 18·0	
	Victoria and — 4°·4855. (k) (584)			Victoria and — 4°·4861. (m) (585)	
	Scale r			Scale r	
16 21 54	89 311 3·827	h m s	16 28 5	108 291 3·798	h m s
23 42	·736	16 24 22·5	28 59	·740	16 29 49·0
24 57	110 289 4·320	″	30 7	91 309 4·304	″
25 57	·402	859·115	31 5	·370	704·544
				Rotated prism 90°.	
	Victoria and — 4°·4861. (m) (586)			Victoria and — 4°·4855. (k) (587)	
16 31 54	91 309 4·334	h m s	16 37 40	110 289 4·674	h m s
32 46	·314	16 33 47·8	38 36	·663	16 39 15·0
33 57	109 292 3·699	″	39 25	89 311 3·319	″
35 34	·594	705·100	40 19	·303	855·200

Run + 0r·014.
Chronometer Correction + 15ˢ·0.
I. 1 only about 15ʰ 50ᵐ to 16ʰ 10ᵐ; the stars were faint in clouds and definition 2–3 and even 3. Definition on the whole is the best experienced as yet in the observations of Victoria.

	B	t	T
	h m	in.	°	°
At	15 22	30·32	49·7	44·4
	16 44	30·335	48·0	43·5

1889, August 1. GILL.					
	Victoria and — 4°·4855. (k) (588)			Victoria and — 4°·4861. (m) (589)	
h m s	° ′ ″	h m s	h m s	° ′ ″	h m s
21 37 19	325 22·0 22·0	21 40 47·3	21 47 18	323 57·0 56·0	21 50 12·3
39 32	26·5 25·5	° ′ ″	48 57	55·5 54·5	° ′ ″
41 54	326 53·0 52·5	146 8 37	50 54	322 29·5 29·0	323 11 11
43 24	54·0 53·5		52 40	24·5 23·5	
				Rotated prism 90°.	

Digitized by Google

Chronometer Time.	Readings of Scale or Position Circle.	Cape Sid. Time. — Distance or P. Angle.	Chronometer Time.	Readings of Scale or Position Circle.	Cape Sid. Time. — Distance or P. Angle.
	1889, August 1. GILL—*continued.*				
	Victoria and — 4°·4861. (m) (590)			Victoria and — 4°·4855. (k) (591)	
h m s	° ′ ″	h m s	h m s	° ′ ″	h m s
21 53 47	322 22·5 21·5	21 56 41·3	22 2 54	327 30·0 29·5	22 5 12·3
55 0	21·0 20·2	° ′ ″	4 18	31·0 30·0	° ′ ″
57 13	323 42·5 42·0	323 0 20	5 51	326 10·0 9·2	146 50 2
59 45	37·0 36·0		6 46	10·5 10·0	
	Victoria and — 4°·4855. (k) (592)			Victoria and — 4°·4855. (k) (593)	
	Scale r			Scale r	
22 8 45	109 290 3·958	h m s	22 14 44	90 310 3·890	h m s
9 50	·912	22 10 54·0	16 59	·862	22 19 0·3
11 25	90 310 3·962	″	19 36	109 290 4·193	″
12 36	·990	782·063	23 42	·221	780·192
	Rotated prism 90°.				
	Victoria and —4°·4861. (m) (594)			Victoria and — 4°·4861. (m) (595)	
22 27 36	109 290 5·062	h m s	22 33 4	90 310 2·975	h m
28 59	·027	22 30 8·0	34 54	3·004	22 35 52·0
30 41	90 310 3·046	″	36 46	109 290 4·840	″
32 13	·001	771·693	37 44	·812	772·620
	Rotated prism 90°.				
	Victoria and — 4°·4861. (m) (596)			Victoria and — 4°·4861. (m) (597)	
22 39 43	109 290 4·821	h m s	22 45 20	90 310 3·302	h m s
40 53	·766	22 42 1·3	48 18	·356	22 49 22·5
42 36	90 310 3·225	″	50 54	109 290 4·597	″
43 53	·229	773·978	51 58	·540	775·624
	Rotated prism 90°.				
	Victoria and — 4°·4855. (k) (598)			Victoria and — 4°·4855. (k) (599)	
22 57 22	109 290 4·838	h m s	23 3 59	90 310 3·039	h m s
59 4	·837	23 0 16·0	4 57	2·980	23 6 56·0
23 1 12	90 310 3·054	″	7 14	109 290 4·944	″
2 26	·014	772·787	10 34	·978	772·043
	Rotated prism 90°.				

	h m	B in.	t °	T °
At	21 35	30·30	43·0	37·9
	23 13	30·28	41·5	37·0

Run + or ·014.
Chronometer Correction + 15ˢ·0.
I. 1 ; S. 1–2. By far the finest definition, as yet, during the whole of my observations of Victoria.

Digitized by Google

Chronometer Time.	Readings of Scale or Position Circle.	Cape Sid. Time. — Distance or P. Angle.	Chronometer Time.	Readings of Scale or Position Circle.	Cape Sid. Time. — Distance or P. Angle.
1889, August 2. GILL.					
On August 2, during the day, the least distance of the optical centres of the two segments was adjusted. This error had been increased when the halves of the object-glass were separated on August 1 to remove rain-drops that had entered between the lenses when the door of the dome was blown open during the gale of July 30.					
	Victoria and — 4°·4855. (k) (600)			Victoria and — 5°·5021. (i) (601)	
h m s	° ′ ″	h m s	h m s	° ′ ″	h m s
16 50 25	180 19·0 18·5	16 53 7·8	16 58 26	191 15·0 14·5	17 0 42·1
51 58	21·5 21·0	° ′ ″	59 14	13·5 13·0	° ′ ″
53 56	32·0 31·5	180 26 26	17 1 24	7·0 6·5	11 9 41
55 15	34·5 33·5		2 47	4·5 3·5	
				Rotated prism 90°.	
	Victoria and — 5°·5021. (i) (602)			Victoria and — 4°·4855. (k) (603)	
17 5 0	191 2·5 2·0	h m s	17 16 18	181 18·0 17·5	h m s
6 29	190 59·0 58·0	17 7 53·1	18 30	20·5 20·0	17 19 6·3
8 48	191 1·0 0·5	° ′ ″	19 48	19·5 19·0	° ′ ″
10 18	0·0 59·5	11 0 19	20 52	17·5 16·5	181 18 34
	Victoria and — 4°·4855. (k) (604)			Victoria and — 5°·5021. (i) (605)	
	Scale r			Scale r	
17 22 30	109 291 5·475	h m s	17 31 49	87 312 4·292	h m s
24 23	·404	17 24 56·1	33 3	·265	17 33 48·3
25 31	91 310 2·737	″	34 18	112 288 3·950	″
26 23	·776	728·276	35 6	·926	983·981
				Rotated prism 90°.	
	Victoria and — 5°·5021. (i) (606)			Victoria and — 4°·4885. (k) (607)	
17 36 26	112 288 3·952	h m s	17 42 37	90 309 2·851	h m s
37 33	·945	17 38 20·6	43 26	·881	17 44 19·3
38 49	87 312 4·205	″	44 47	109 291 5·287	″
39 37	·160	983·444	45 30	·267	729·655
Run + 0r·017.				B t T	
Chronometer Correction + 14s·3.				h m in. ° °	
I. 1-2 ; S. 1-2.			At 16 48	30·06 51·2 49·2	
			17 48	30·05 50·3 47·9	
1889, August 5. AUWERS.					
	Victoria and — 4°·4843. (g) (608)			Victoria and — 4°·4843. (g) (609)	
	A B			A B	
h m s	° ′ ′	h m s	h m s	° ′ ′	h m s
15 36 37	319 4·0 2·7	15 38 23·1	15 40 42	319 7·0 6·5	15 42 3·4
37 33	0·0 59·0	° ′ ″	41 13	7·0 6·0	° ′ ″
38 54	4·0 2·7	139 3 3	42 8	11·5 10·7	139 9 13
39 44	6·5 5·5		43 26	13·0 12·0	
	Rotated prism 90°.				

Digitized by Google

Chronometer Time.	Readings of Scale or Position Circle.	Cape Sid. Time. — Distance or P. Angle.	Chronometer Time.	Readings of Scale or Position Circle.	Cape Sid. Time. — Distance or P. Angle.
	1889, August 5. AUWERS—*continued.*				
	Victoria and — 4°·4843. (g) (610)			Victoria and — 4°·4843. (g) (611)	
h m s	° ′ ″	h m s	h m s	° ′ ″	h m s
15 44 29	319 16·0 15·2	15 46 27·6	15 49 4	319 20·0 18·5	15 50 37·1
45 59	17·0 16·2	° ′ ″	50 1	20·5 19·5	° ′ ″
46 49	15·5 15·0	139 16 8	50 56	24·0 23·0	139 21 43
47 49	17·5 16·7		51 43	24·5 23·7	
	Rotated prism 90°.			Reversed Position Circle.	
	Victoria and — 4°·4843. (g) (612)			Victoria and — 4°·4843. (g) (613)	
15 54 27	139 31·5 31·3	h m s	15 58 24	139 34·0 33·5	h m s
55 29	29·0 28·2	15 56 15·6	59 13	35·5 34·0	15 59 53·4
56 52	32·0 31·5	° ′ ″	16 0 17	40·0 39·5	° ′ ″
57 30	35·5 34·8	139 31 43	0 55	37·0 36·5	139 36 15
	Rotated prism 90°.				
	Victoria and — 4°·4843. (g) (614)			Victoria and — 4°·4843. (g) (615)	
16 1 35	139 40·0 39·8	h m s	16 5 43	139 51·0 50·2	h m s
2 32	40·5 40·2	16 3 15·6	6 29	50·0 50·0	16 7 19·9
3 33	44·0 43·5	° ′ ″	7 12	47·0 47·0	° ′ ″
4 38	47·5 47·2	139 42 50	9 11	52·0 51·2	139 49 48
	Rotated prism 90°.				
	Standard Stars. (616)			Standard Stars. (617)	
16 18 36	° ′ ′ ″ ′ ″	h m s	16 28 46	Scale r	h m s
21 30	97 48 8 32 7 41	16 22 44·6	30 30	180 220 2·185	16 31 41·9
24 18	8 2 7 12	° ′ ″	32 51	·192	″
25 50	48 9 13 8 6	97 48 7	33 56	19 381 2·060	6454·181
	9 19 8 28			1·888	
	Standard Stars. (618)				
16 34 51	Scale r	h m s			
36 18	19 381 1·808	16 37 18·9			
38 8	1·948	″			
39 14	180 220 2·200	6453·669			
	·188				

Distances of Victoria, *See* next page.

Digitized by Google

Chronometer Time.	Readings of Scale or Position Circle.	Cape Sid. Time. — Distance or P. Angle.	Chronometer Time.	Readings of Scale or Position Circle.	Cape Sid. Time. — Distance or P. Angle.
1889, August 5. AUWERS—*continued.*					
	Victoria and — 4°·4843. (g) (619)			Victoria and — 4°·4843. (g) (620)	
h m s	Scale r	h m s	h m s	Scale r	h m s
16 44 39	109 291 5·438	16 47 52·1	16 54 23	91 310 2·681	16 58 19·4
46 37	·460	"	55 45	·583	"
49 13	91 310 2·627	727·646	57 59	109 291 5·681	726·281
50 15	·657		17 0 5	·669	
	Rotated prism 90°.		1 36	·663	
			5 10	·825	
				Completely stopped by cloud.	
	Victoria and — 4°·4843. (g) (621)			Victoria and — 4°·4843. (g) (622)	
17 40 38	109 292 2·370	h m s	17 46 3	91 309 5·825	h m s
41 36	·318	17 42 42·4	48 26	·867	17 51 1·1
42 39	91 309 5·788	"	51 33	·733	"
45 12	·729	718·885	52 35	109 292 2·500	718·350
	Rotated prism 90°.		54 43	·510	
	Victoria and — 4°·4843. (g) (623)			Victoria and — 4°·4843. (g) (624)	
17 58 50	109 292 2·604	h m s	18 7 29	91 309 5·470	h m s
18 0 13	·630	18 1 20·6	8 37	·419	18 9 35·9
1 33	91 309 5·524	"	9 56	109 292 2·798	"
4 2	·490	716·244	11 37	·750	715·138
	Rotated prism 90°.				

Run + 0r·018.
Chronometer Correction + 11s·1.
Correction for coincidence of the Position Circle Microscopes — 0′ 12″.
During 608–611 I. 2, but Stars rather faint and low.
612–615 I. 3, but Stars brighter.
616–618 I. 2–3, but trouble by "loss of time" in distance slide.
619-624 I. 2, but much interruption by cloud; Stars generally only caught in glimpses and often too faint for accurate bisection.

	h m	B in.	t °	T °
At	15 32	30·59	52·2	48·4
	17 22	30·61	50·8	48·7
	18 13	30·62	50·8	50·0

Chronometer Time.	Readings of Scale or Position Circle.	Cape Sid. Time. — Distance or P. Angle.	Chronometer Time.	Readings of Scale or Position Circle.	Cape Sid. Time. — Distance or P. Angle.
1889, August 6. GILL.					
	Victoria and — 5°·5006. (f) (625)			Victoria and — 5°·5006. (f) (626)	
h m s	Scale r	h m s	h m s	Scale r	h m s
15 40 53	110 291 2·277	15 43 14·3	15 48 25	90 310 5·657	15 51 5·6
42 16	·381	"	49 18	·602	"
44 6	90 310 5·780	799·165	51 50	110 291 2·607	796·836
44 57	·767		54 4	·689	
	Rotated prism 90°.				

Digitized by Google

Chronometer Time.	Readings of Scale or Position Circle.	Cape Sid. Time. — Distance or P. Angle.	Chronometer Time.	Readings of Scale or Position Circle.	Cape Sid. Time. — Distance or P. Angle.
	1889, August 6. GILL—*continued.*				
	Victoria and — 5°·5006. (f) (627)			Victoria and — 5°·5006. (f) (628)	
h m s	Scale r	h m s	h m s	Scale r	h m s
15 54 54	110 291 2·704	15 58 2·6	16 2 48	90 310 5·200	16 5 43·6
56 19	·740	"	4 35	·168	"
58 39	90 310 5·365	794·902	6 24	110 291 3·117	792·039
16 1 33	·274		8 22	·193	
	Rotated prism 90°.			Reversed Position Circle.	
	Victoria and — 5°·5006. (f) (629)			Victoria and — 5°·5006. (f) (630)	
16 10 26	109 290 3·318	h m s	16 16 33	90 310 4·781	h m s
12 4	·329	16 13 4·3	18 0	·630	16 18 48·8
14 2	90 310 4·862	"	19 38	109 290 3·550	"
15 0	·776	789·386	20 19	·583	787·590
	Rotated prism 90°.				
	Victoria and — 5°·5006. (f) (631)			Victoria and — 5°·5006. (f) (632)	
16 21 15	109 290 3·621	h m s	16 26 38	90 310 4·375	h m s
23 13	·710	16 23 59·3	27 23	·368	16 28 34·8
24 56	90 310 4·433	"	28 30	109 290 3·920	"
25 48	·406	785·653	31 3	·952	784·049
	Rotated prism 90°.				
	Standard Stars. (633)			Standard Stars. (634)	
16 36 39	180 220 2·260	h m s		° ′ ′ ″ ′ ″	
37 44	·241	16 38 48·3	16 42 43	97 49 8 55 7 53	h m s
39 31	19 380 5·857	"	45 55	8 36 7 43	16 47 26·8
40 34	·840	6453·314	48 50	8 32 7 42	° ′ ″
			51 34	8 31 7 32	97 47 58
	Victoria and — 5°·5006. (f) (635)			Victoria and — 5°·5006. (f) (636)	
16 57 23	° ′ ′	h m s	17 3 15	° ′ ′	h m s
58 37	64 9·5 9·0	16 59 35·1	4 17	64 17·0 16·5	17 5 27·1
17 0 16	9·0 8·5	° ′ ″	5 57	15·5 15·0	° ′ ″
1 19	18·0 17·5	64 13 15	7 34	7·0 6·0	64 10 45
	17·5 17·0			5·0 4·0	
	Rotated prism 90°.			Reversed Position Circle.	
	Victoria and — 5°·5006. (f) (637)			Victoria and — 5°·5006. (f) (638)	
17 9 53	244 0·5 0·0	h m s	17 18 50	244 15·0 14·5	h m s
13 6	243 59·5 58·5	17 13 46·3	21 41	15·0 14·5	17 22 6·8
14 42	244 16·0 15·0	° ′ ″	23 4	243 57·0 56·5	° ′ ″
16 39	16·0 15·0	64 7 34	24 7	57·5 57·0	64 5 52
	Rotated prism 90°.				

Digitized by Google

Chronometer Time.	Readings of Scale or Position Circle.	Cape Sid. Time. — Distance or P. Angle.	Chronometer Time.	Readings of Scale or Position Circle.	Cape Sid. Time. — Distance or P. Angle.
1889, August 6. GILL—*continued.*					
	Standard Stars. (639)				
h m s	° ′ ′ ″ ′ ″	h m s			
17 28 54	277 48 7 15 6 19	17 33 42·8			
31 59	7 21 6 28	° ′ ″			
35 26	49 9 4 8 11	277 47 32			
37 47	9 4 8 10				
Run + 0ʳ·018.				B t T	
Correction for coincidence of the Position Circle Microscopes — 12″.				h m in. ° °	
Chronometer Correction + 11ˢ·3.			At	15 38 30·58 54·0 50·2	
During 625–628 I. 2 ; S. 2–3.				17 42 30·56 51·0 47·0	
„ 629–634 I. 1–2 ; S. 2.					
„ 635–639 I. 1 ; S. 1. ; observing conditions absolutely perfect.					
1889, August 6. AUWERS.					
	Victoria and — 5°·5006. (f) (640)			Victoria and — 5°·5006. (f) (641)	
h m s	° ′ ′	h m s	h m s	° ′ ′	h m s
21 49 34	242 41·0 40·7	21 51 51·0	21 54 45	242 30·2 29·8	21 56 29·8
50 46	36·0 35·5	° ′ ″	55 42	30·5 30·0	° ′ ″
52 39	32·7 31·2	62 34 17	56 59	36·5 35·3	62 34 47
53 39	29·0 28·2		57 47	35·5 34·5	
	Rotated prism 90°.				
	Victoria and — 5°·5006. (f) (642)			Victoria and — 5°·5006. (f) (643)	
21 59 3	242 35·3 34·2	h m s	22 3 53	242 27·0 26·0	h m s
59 59	35·0 34·2	22 0 58·3	4 49	30·0 29·2	22 5 38·5
22 1 24	32·0 30·5	° ′ ″	6 8	31·5 30·2	° ′ ″
2 41	28·0 27·0	62 32 1	6 58	30·5 30·0	62 29 18
	Rotated prism 90°.			Reversed Position Circle.	
	Victoria and — 5°·5006. (f) (644)			Victoria and — 5°·5006. (f) (645)	
22 9 43	62 32·5 30·5	h m s	22 13 40	62 25·5 24·5	h m s
10 24	28·0 27·0	22 11 17·3	14 37	18·0 17·0	22 15 51·0
11 39	25·0 24·5	° ′ ″	16 29	31·0 30·2	° ′ ′
12 37	21·5 20·5	62 26 11	17 52	31·5 30·5	62 26 1
	Rotated prism 90°.				
	Victoria and — 5°·5006. (f) (646)			Victoria and — 5°·5006. (f) (647)	
22 19 6	62 34·5 34·0	h m s	22 24 39	62 18·0 17·0	h m s
19 54	28·0 27·7	22 20 53·0	25 24	18·0 17·0	22 26 25·5
21 23	21·5 20·7	° ′ ′	26 55	26·0 25·0	° ′ ″
22 23	19·0 18·2	62 25 27	27 58	24·0 23·0	62 21 0
	Rotated prism 90°.				

Digitized by Google

Chronometer Time.	Readings of Scale or Position Circle.	Cape Sid. Time. — Distance or P. Angle.	Chronometer Time.	Readings of Scale or Position Circle.	Cape Sid. Time. — Distance or P. Angle.
	1889, August 6. AUWERS—*continued.*				
	Standard Stars. (648 & 649)			Standard Stars. (650)	
h m s	° ′ ″ ″ ′ ″		h m s	° ′ ′	
22 33 47	97 48 8 0 7 13		22 48 49	180 220 2·456	
35 5	7 43 6 50		49 52	·432	
	Rotated prism 90°.			Rotated prism 90°.	
36 45	8 20 7 25		50 39	2·351	h m s
38 11	8 14 7 16	h m s	51 23	·370	22 52 32·0
40 30	7 37 6 38	22 39 32·1	52 59	19 381 1·981	″
41 57	7 38 6 36	° ′ ″	53 58	·909	6452·576
	Rotated prism 90°.	97 47 11		Rotated prism 90°.	
43 29	7 33 6 38		55 6	1·808	
45 1	7 33 6 30		55 58	19 380 5·763	
	Victoria and — 5°·5006. (f) (651)			Victoria and — 5°·5006. (f) (652)	
	Scale r	h m s		Scale r	h m s
23 3 36	92 309 2·283	23 5 24·5	23 8 29	108 293 2·132	23 11 11·8
4 38	·250	″	10 40	·251	″
5 48	108 293 2·052	642·523	11 59	92 309 2·026	640·522
6 50	·084		12 53	1·959	
	Rotated prism 90°.				
	Victoria and — 5°·5006. (f) (653)			Victoria and — 5°·5006. (f) (654)	
23 13 50	92 309 1·983	h m s	23 19 16	108 293 2·528	h m s
15 19	·903	23 16 10·5	19 59	·608	23 21 0·5
16 55	108 293 2·451	″	21 33	92 308 5·676	″
17 52	·487	638·876	22 28	·624	636·964
	Rotated prism 90°.			Reversed Position Circle.	
	Victoria and — 5°·5006. (f) (655)			Victoria and — 5°·5006. (f) (656)	
23 24 37	92 308 5·591	h m s	23 29 22	108 293 2·836	h m s
25 45	·512	23 26 42·8	30 7	·810	23 30 57·5
27 22	108 293 2·722	″	31 21	92 308 5·404	″
28 21	·773	635·562	32 14	·312	634·208
	Rotated prism 90°.				
	Victoria and — 5°·5006. (f) (657)			Victoria and — 5°·5006. (f) (658)	
23 33 44	92 308 5·291	h m s	23 37 29	108 293 3·110	h m s
34 29	·245	23 35 18·5	38 21	·175	23 39 9·8
35 37	108 293 3·084	″	39 28	92 308 5·050	″
36 38	·096	632·411	40 35	·025	630·986
	Rotated prism 90°.				

Run + 0ᵐ·018.
Correction for coincidence of Position Circle Microscopes — 10″·5.
Chronometer Correction + 11ˢ·5.
During 640–647 I. 1–2; S. 1–2.
648–650 I. 2–3; S. 3.
651–658. Images varied from 2–3 to 3–4, sometimes nearly 4, Stars getting low, sometimes thin haze, and finally object glass dewed. Stars rather faint, but observations to the end pretty satisfactory.

	B	t	T
	h m	in.	°
At	21·40	30·55	47·4	44·0
	23·44	30·52	46·2	44·8

Digitized by Google

Chronometer Time.	Readings of Scale or Position Circle.	Cape Sid. Time. — Distance or P. Angle.	Chronometer Time.	Readings of Scale or Position Circle.	Cape Sid. Time. — Distance or P. Angle.
		1889, August 7. AUWERS.			
	Victoria and — 5°·5006. (f) (659)			Victoria and — 5°·5006. (f) (660)	
h m s	Scale r	h m s	h m s	Scale r	h m s
15 27 29	95 304 4·349	15 29 20·7	15 31 31	104 296 4·016	15 33 23·0
28 37	·311	"	32 43	·099	"
29 49	104 296 3·909	342·723	33 54	95 304 4·140	341·321
30 43	·991	Corr. for ψ + ·193	34 39	·178	Corr. for ψ + ·193
	Rotated prism 90°.			ψ Assumed = 1° 55′ (*See* Foot note.)	
	ψ Assumed = 1° 55′ (*See* Foot-note.)				
	Victoria and — 5°·5006. (f) (661)			Victoria and — 5°·5006. (f) (662)	
15 35 36	95 304 4·125	h m s	15 39 44	104 296 4·300	h m s
36 18	·132	15 37 21·7	40 20	·224	15 40 58·2
37 48	104 296 4·212	"	41 8	95 304 3·924	"
39 0	·168	340·500	41 56	·931	339·127
	Rotated prism 90°.			Reversed Position Circle.	
	Victoria and — 5°·5006. (f) (663)			Victoria and — 5°·5006. (f) (664)	
15 44 33	95 304 3·758	h m s	15 48 38	104 296 4·507	h m s
45 41	·736	15 46 22·5	49 28	·549	15 50 26·5
46 46	104 296 4·480	"	50 58	95 304 3·600	"
47 45	·452	337·193	51 57	·582	336·095
	Rotated prism 90°.				
	Victoria and — 5°·5006. (f) (665)			Victoria and — 5°·5006. (f) (666)	
15 53 9	95 304 3·528	h m s	15 57 15	104 296 4·830	h m s
54 24	·544	15 55 9·5	57 58	·804	15 58 39·7
55 44	104 296 4·762	"	58 58	95 304 3·357	"
56 36	·801	334·544	59 43	·279	333·267
	Rotated prism 90°.				
	Standard Stars. (667)			Standard Stars. (668)	
16 5 24	19 380 5·704		16 10 25	97° 49′ 9 12″ 8 21″	
6 33	·770	h m s	12 13	9 16 8 12	h m s
	Rotated prism 90°.	16 7 32·7		Rotated prism 90°.	16 14 42·5
16 8 17	180 220 2·260	"	16 43	8 32 7 41	° ′ ″
9 12	·308	6452·576	18 44	8 56 8 7	97 48 22
	Victoria and — 5°·5006. (f) (669)			Victoria and — 5°·5006. (f) (670)	
	° ′ ′			° ′	
16 24 34	53 33·5 33·0	h m s	16 29 11	53 8·0 7·0	h m s
25 27	28·0 27·0	16 26 19·2	30 40	4·0 3·8	16 31 26·7
26 51	15·0 15·0	° ′ ″	31 50	25·0 24·5	° ′ ″
27 40	14·0 13·5	53 22 22	33 21	19·0 18·5	53 13 43
	Rotated prism 90°.				

Digitized by Google

1889, August 7. AUWERS—*continued.*

Victoria and — 5°·5006. (f) (671)

Chronometer Time.	Readings of Scale or Position Circle. A	B	Cape Sid. Time. Distance or P. Angle.
h m s	° ′	′	h m s
16 35 21	233 22·0	21·5	16 37 6·7
36 12	20·0	19·0	° ′ ″
37 39	232 55·0	54·5	53 7 56
38 30	56·0	55·5	

Rotated prism 90°.

Victoria and — 5°·5006. (f) (672)

Chronometer Time.	Readings of Scale or Position Circle. A	B	Cape Sid. Time. Distance or P. Angle.
h m s	° ′	′	h m s
16 39 20	233 3·0	2·0	16 40 58·2
40 0	3·0	1·5	° ′ ″
41 27	13·0	13·0	53 6 41
42 21	9·5	8·5	

	h m	B in	t °	T °
At	15 18	30·485	58·3	52·6
	16 45	30·48	55·6	53·6

Run + 0ᵐ·016.
Correction for coincidence of Microscopes of Position Circle — 10″·5.
Chronometer Correction + 11ˢ·2.
I. 2–3 and 2; Stars rather faint at beginning. Observations difficult and not very accurate owing to the small distance, necessitating a total rotation in Position Angle = 3° 45′. The field being only feebly illuminated by the Moon the motions were generally made tangential in Observations 659 and 660; but in 661 and 662 with better images, I endeavoured to observe the bisections themselves, while in 663-666 I purposely disregarded the wires. A. A.

1889, August 7. GILL.

Victoria and — 5°·5006. (f) (673)

Chronometer Time.	Scale	r	° ′	Cape Sid. Time. Distance or P. Angle. h m s
h m s				
21 59 47	102 297	4·308	41 38	22 3 44·8
22 2 23		·388	44 49	″
4 50	97 303	3·670	41 49	216·777
7 14		·538	41 9	

Correction for ψ + ·096

Rotated prism 90°. $\psi = 1° 43'$

Victoria and — 5°·5006. (f) (674)

Chronometer Time.	Scale	r	° ′	Cape Sid. Time. Distance or P. Angle. h m s
h m s				
22 8 44	97 303	3·540	41 9	22 12 37·6
11 32		·416	45 8	″
13 49	102 297	4·760	45 8	213·991
15 40		·790	40 32	

Correction for ψ + ·152

$\psi = 2° 9'$

Victoria and — 5°·5006. (f) (675)

Chronometer Time.	Scale	r	° ′	Cape Sid. Time. Distance or P. Angle. h m s
h m s				
22 17 57	102 297	4·850	40 32	22 21 55·6
19 32		·980	45 19	″
23 41	97 303	3·050	44 42	210·937
25 47		2·974	40 2	

Correction for ψ + ·180

Rotated prism 90°. $\psi = 2° 22'$

Victoria and — 5°·5006. (f) (676)

Chronometer Time.	Scale	r	° ′	Cape Sid. Time. Distance or P. Angle. h m s
h m s				
22 29 3	97 303	2·983	40 2	22 32 2·6
31 8		·819	44 38	″
32 36	102 297	5·292	44 37	208·393
34 38		·326	39 48	

Correction for ψ + ·177

$\psi = 2° 22'$

Victoria and — 5°·5006. (f) (677)

Chronometer Time.	Readings of Scale or Position Circle. A	B	Cape Sid. Time. Distance or P. Angle.
h m s	° ′	′	h m s
22 36 47	221 53·0	52·5	22 40 35·1
39 26	48·5	48·5	° ′ ″
41 42	18·5	18·0	41 36 7
43 40	25·0	25·0	

Rotated prism 90°.

Victoria and — 5°·5006. (f) (678)

Chronometer Time.	Readings of Scale or Position Circle. A	B	Cape Sid. Time. Distance or P. Angle.
h m s	° ′	′	h m s
22 47 28	221 18·0	17·0	22 56 44·3
53 47	7·0	6·5	° ′ ″
59 53	220 43·0	42·0	40 50 37
23 5 4	16·0	15·5	

Digitized by Google

Chronometer Time.	Readings of Scale or Position Circle.	Cape Sid. Time. — Distance or P. Angle.	Chronometer Time.	Readings of Scale or Position Circle.	Cape Sid. Time. — Distance or P. Angle.
1889, August 7. GILL—*continued.*					
	Victoria and — 5°·5006. (f) (679)			Victoria and — 5°·5006. (f) (680)	
h m s	° ′ ″	h m s	h m s	° ′ ″	h m s
23 6 51	220 20·0 19·5	23 9 4·3	23 13 34	220 16·0 15·5	23 17 9·6
7 49	219 53·0 52·5	° ′ ″	15 12	219 51·0 51·0	° ′ ″
9 57	220 14·0 14·0	40 11 49	17 11	32·0 31·5	39 47 4
10 55	21·0 20·5		21 56	30·0 29·5	
	Rotated prism 90°.				
	Victoria and — 5°·5006. (f) (681)			Victoria and — 5°·5006. (f) (682)	
23 23 33	219 30·0 29·5	h m s	23 29 25	219 24·0 23·0	h m s
24 45	16·0 15·0	23 26 2·8	30 25	18·5 18·0	23 31 49·8
27 4	22·0 21·0	° ′ ″	32 21	218 45·5 45·0	° ′ ″
28 4	20·5 20·5	39 21 49	34 23	45·5 45·0	39 3 4
	Rotated prism 90°.				
	Victoria and — 5°·5006. (f) (683)			Victoria and — 5°·5006. (f) (684)	
23 36 16	218 38·0 37·5	h m s	23 41 36	218 34·5 34·0	h m s
37 3	28·0 27·5	23 38 19·1	42 52	22·0 21·5	23 44 13·3
38 51	218 57·0 56·5	° ′ ″	45 19	6·0 5·0	° ′ ″
40 21	47·5 47·0	38 42 22	46 21	0·5 0·5	38 15 30
	Rotated prism 90°.				
	Standard Stars. (685)				
	° ′ ′ ″ ′ ″				
23 58 1″	277 45 5 32 4 39	h m s			
0 0 51	5 23 4 31	0 2 16·6			
3 20	47 6 11 5 17	° ′ ″			
6 9	6 15 5 20	277 45 15			

I. 2–3 ; S. 2 throughout, except for Standard Stars, when I. 3 ; S. 3.

Note.—The measures of distance 673-676 were made by placing the stars thus :— 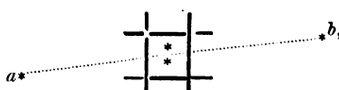 the superposed stars forming a little double star, as it were, the line joining the components of which was made parallel to the fixed wires and not at right angles to the line *a*, *b*. If the wires fixed in the focus are not strictly at right angles to or parallel with the motion of the segments, an error would be produced in the distance observed by this method, but this error is completely eliminated if in the succeeding observation the Position Circle is rotated so as to interchange the positions of the two stars. The Position Angles in connection with the measures of distance 673-676 are not measures of Position Angle, but simply a record of the direction along which the observed distances were measured, and which therefore permit the necessary correction to the true distance to be made.

	B	t	T
h m	in.	°	°
At 21 56	30·40	52·7	52·8
0 8	30·37	52·5	53·0

Run + 0ʳ·021.
Correction for coincidence of Microscopes of Position Circle — 8″.
Chronometer Correction + 11ˢ·3.

Digitized by Google

Chronometer Time.	Readings of Scale or Position Circle.	Cape Sid. Time. — Distance or P. Angle.	Chronometer Time.	Readings of Scale or Position Circle.	Cape Sid. Time. — Distance or P. Angle.
		1889, August 8. GILL.			
h m s	Standard Stars. (686)				
15 26 9	Estimated. ° ′ ′ ″ ′ ″	h m s		This observation was made to control zero of Position Angle at considerable hour angle. The measured distances of Victoria on this night are so small as to require no control on scale-value.	
28 25	277 49 9 50 8 50	15 29 55·8			
30 34	38 31	° ′ ″			
33 50	10 8	277 49 8			
	10 6				
	Victoria and — 5°·5006. (f) (687)			Victoria and — 5°·5006. (f) (688)	
h m s	Scale r	° ′	h m s		° ′
15 41 0	102 299 2·980	283 33	15 49 39	98 302 *	282 43
43 21	·932	288 52 *See* Foot-notes.	51 2	5·399	288 32 *See* Foot-notes.
45 23	98 302 5·222	288 52	52 42	102 299 2·701	288 32
47 38	·282	282 42	56 3	·580	281 51
	Rotated prism 90°.			* One printing omitted, probably this.	
	Victoria and — 5°·5006. (f) (689)			Victoria and — 5°·5006. (f) (690)	
15 58 12	102 299 2·516	281 15 h m s	16 8 45	98 302 5·866	281 35 h m s
16 1 57	·429	287 30 16 2 29·8	9 47	·925	287 29 16 11 30·3
3 19	98 302 5·737	287 30 ″	12 10	102 299 2·177	287 29 ″
5 46	·731	281 34 156·754	14 34	·075	280 43 159·310
	Rotated prism 90°.	Corr. for ψ + ·225.		$\psi = 3° 9'$.	Corr. for ψ + ·237.
		$\psi = 3° 4'$.			
	Victoria and — 5°·5006. (f) (691)			Victoria and — 5°·5006. (f) (692)	
16 17 55	° ′ ′	h m s	16 25 57	° ′ ′	h m s
19 20	283 38·0 37·5	16 20 50·3	27 26	283 19·5 19·0	16 29 6·1
22 8	37·0 36·5	° ′ ″	30 9	27·5 26·5	° ′ ″
23 13	41·0 40·5	283 37 19	32 7	282 49·5 48·5	283 5 56
	34·5 33·5			49·0 48·0	
	Rotated prism 90°.				
	Victoria and — 5°·5006. (f) (693)			Victoria and — 5°·5006. (f) (694)	
16 35 18	282 17·0 16·5	h m s	16 40 41	282 19·0 19·0	h m s
35 58	22·0 22·0	16 37 18·8	41 48	283 39·5 39·0	16 43 34·1
38 3	44·0 44·0	° ′ ″	43 48	281 55·0 54·0	° ′ ″
39 11	15·0 14·5	282 24 22	47 14	33·0 32·5	282 6 26
	Rotated prism 90°.			* The second pointing is given as noted; it is assumed that it should be 282° 39′·5.	
	Victoria and — 5°·5006. (f) (695)			Victoria and — 5°·5006. (f) (696)	
16 48 31	281 30·5 30·0	h m s	16 51 58	281 53·0 52·5	h m s
48 59	37·5 37·0	16 49 57·3	53 1	49·5 48·0	16 54 13·3
50 26	40·5 40·0	° ′ ″	54 56	2·0 1·5	° ′ ″
51 8	282 5·0 4·0	281 43 4	56 13	280 54·0 53·5	281 24 15
	Rotated prism 90°.				

Digitized by Google

Chronometer Time.	Readings of Scale or Position Circle.	Cape Sid. Time. — Distance or P. Angle.	Chronometer Time.	Readings of Scale or Position Circle.	Cape Sid. Time. — Distance or P. Angle.
	1889, August 8. GILL—*continued.*				
	Victoria and — 5°·5006. (f) (697)			Victoria and — 5°·5006. (f) (698)	
h m s	° ′ ″	h m s	h m s	° ′ ″	h m s
16 57 19	280 58·0 57·5	16 59 9·1	17 1 42	281 22·0 22·0	17 3 48·8
58 22	281 3·5 3·0	° ′ ″	2 18	28·0 27·5	° ′ ″
59 40	32·0 31·5	281 12 41	4 41	280 30·5 30·0	280 54 48
17 0 30	18·0 18·0		5 49	19·5 19·0	
	Rotated prism 90°.				
	Standard Stars. (699)			Standard Stars. (700)	
	° ′ ″ ″ ′ ″	h m s		Scale r	h m s
17 9 32	277 49 8 37 7 34	17 12 57·3	17 17 45	180 220 2·125	17 19 59·8
11 37	47 47	° ′ ″	18 43	·118	″
14 11	48 8 2 10	277 47 43	20 42	19 381 1·918	6454·287
15 44	7 58 10		22 4	·938	

Run + 0ʳ·015.
Correction for coincidence of Microscopes of Position Circle — 10″.
Chronometer Correction + 11ˢ·3.
During 686 I. 3 ; S. 2–3.
687–690 I. 2–3 ; S. 2.
691–694 I. 2 ; S. 2.
695-698 I. 1–2 ; S. 2.
699–700 I. 1–2 ; S. 2–3.

	B	t	T
	h m	in °	°
At	15 35	30·24 59·6	53·2
	17 24	30·20 55·0	51·8

Note.—There is some doubt as to the epochs and distances for the Observations 687 and 688, because one printing of the Micrometer head has been inadvertently omitted.

	Cape Sid. Time.	Distance.
	h m s	″
If the omitted observation was that corresponding to 15ʰ 49ᵐ 39ˢ by chronometer we have	687 at 15 44 32·2	151·882
	688 53 27·4	154·232
If the omitted printing was at 15ʰ 47ᵐ 38ˢ we have	687 at 15 43 59·0	151·741
	688 52 33·2	154·187
If the omitted printing was at 15ʰ 51ᵐ 2ˢ we have	687 at 15 44 32·2	151·882
	688 52 59·7	154·232
If the omitted printing was at 15ʰ 45ᵐ 23ˢ we have	687 at 15 44 11·4	151·741
	688 52 33·2	154·187

Chronometer Time.	Readings of Scale or Position Circle.	Cape Sid. Time. — Distance or P. Angle.	Chronometer Time.	Readings of Scale or Position Circle.	Cape Sid. Time. — Distance or P. Angle.
	1889, August 8. AUWERS.				
	Victoria and — 5°·5006. (f) (701)			Victoria and — 5°·5006. (f) (702)	
h m s	° ′ ″	h m s	h m s	° ′ ″	h m s
21 59 22 }	90 8·0 8·0 }		22 16 11	89 21·5 20·5	22 17 38·7
22 0 35 }	0·5 0·0 }		16 43	32·0 31·5	° ′ ″
2 33 }	89 43·0 42·0 } p. ½	22 6 21·0	17 55	40·0 39·5	269 32 5
3 49 }	45·3 44·5 }	° ′ ″	18 59	36·5 35·2	
14 6 }	20·0 19·5 } p. 1	269 45 26		Scarcely visible in last pointing, diminished screen in order to have at least one object tolerably bright.	
15 9 }	26·0 24·5 }				
	Rotated prism 90°.				

Digitized by Google

1889, August 8. AUWERS—*continued.*

Victoria and — 5°·5006. (f) (703)

Chronometer Time.	Readings of Scale or Position Circle.	Cape Sid. Time. — Distance or P. Angle.
h m s	° ′ ″	h m s
22 23 53	89 18·0 17·2	22 25 22·0
24 37	17·5 17·0	° ′ ″
25 38	9·5 9·0	269 14 28
26 33	14·0 13·5	

Victoria and — 5°·5006. (f) (704)

Chronometer Time.	Readings of Scale or Position Circle.	Cape Sid. Time. — Distance or P. Angle.
h m s	° ′ ″	h m
22 27 26	89 16·0 15·0	22 29 4·7
28 26	13·0 12·5	° ′ ″
29 17	16·0 15·2	269 12 5
30 23	5·0 4·0	

Reversed Position Circle.

Victoria and — 5°·5006. (f) (705)

Chronometer Time.	Readings of Scale or Position Circle.	Cape Sid. Time. — Distance or P. Angle.
h m s	° ′ ″	h m s
22 32 24	269 7·0 6·0	22 33 53·0
33 16	4·0 3·2	° ′ ″
34 7	6·5 5·5	269 6 24
34 58	10·0 9·0	

Rotated prism 90°.

Victoria and — 5°·5006. (f) (706)

Chronometer Time.	Readings of Scale or Position Circle.	Cape Sid. Time. — Distance or P. Angle.
h m s	° ′ ″	h m s
22 35 42	269 7·0 6·5	22 38 4·2
37 6	7·0 6·5	° ′ ″
38 51	268 59·5 59·0	269 3 11
39 51	60·5 59·5	

Stars lost by haze till $23^h\ 8^m$.

Victoria and — 5°·5006. (f) (707)

Chronometer Time.	Readings of Scale or Position Circle.	Cape Sid. Time. — Distance or P. Angle.
h m s	° ′ ″	h m s
23 8 2 } p. ⅓	268 26·0 25·0 }	23 14 36·7
9 45 }	24·5 23·7 } p. ⅓	° ′ ″
13 58 }	21·0 20·0 }	268 13 41
14 44 }	10·0 9·0 }	
15 35 }	14·0 13·0 }	
16 7 }	7 5·7 }	

Rotated prism 90°.

Victoria and — 5°·5006. (f) (708)

Chronometer Time.	Readings of Scale or Position Circle.	Cape Sid. Time. — Distance or P. Angle.
h m s	° ′ ″	h m s
23 17 11	268 13·0 12·0	23 31 46·0
18 2	6·0 5·0	° ′ ″
	Invisible till $23^h\ 44^m$.	267 49 30
44 54	267 35·5 35·0	
46 10	25·5 24·0	

Tabular Position Angle computed separately for $23^h\ 17^m\ 48^s$ and $23^h\ 45^m\ 44^s$ and the mean taken.

Victoria and — 5°·5006. (f) (709)

Chronometer Time.	Scale	r		°	h m s
23 50 54	96	304	3·702	268 27	
51 59			·681	266 26	23 52 39·7
52 53	103	296	4·404	266 26	″
54 6			·426	268 42	297·094

Rotated prism 90°. Corr. for ψ + ·051

$\psi = 1° 4'$.

Victoria and — 5°·5006. (f) (710)

Chronometer Time.	Scale	r		°	h m s
23 55 12	103	296	4·520	268 42	
56 12			·237	266 36	23 56 55·7
57 7	96	304	3·913	265 56	″
58 25			·886	268 49	298·324

Corr. for ψ + ·065

$\psi = 1° 12'$.

Victoria and — 5°·5006. (f) (711)

Chronometer Time.	Scale	r		°	h m s
23 59 33	96	304	3·869	268 49	
0 0 27			4·046	265 33	0 1 23·0
1 36	103	296	4·218	265 33	″
3 9			·101	268 54	299·720

Rotated prism 90°. Corr. for ψ + ·126.

$\psi = 1° 39'$.

Victoria and — 5°·5006. (f) (712)

Chronometer Time.	Scale	r		°	h m s
0 4 12	103	296	4·108	268 53	
5 5			3·994	266 0	0 5 45·2
5 57	96	304	4·160	266 0	″
7 0			·021	268 42	300·935

Corr. for ψ + ·090.

$\psi = 1° 24'$.

Digitized by Google

1889, August 8. AUWERS—*continued.*

Victoria and — 5°·5006. (f) (713)

Chronometer Time.	Readings of Scale or Position Circle.	Cape Sid. Time. — Distance or P. Angle.
h m s	Scale r	° ′
0 7 54	96 304 4·099	268 42
8 52	·224	265 49
9 29	103 296 3·994	265 49
10 24	·904	268 35
		h m s
		0 9 21·5
		″
		301·806

Rotated prism 90°.

$\psi = 1° 25'$ Corr. for ψ + 0″·093.

Victoria and — 5°·5006. (f) (714)

Chronometer Time.	Readings of Scale or Position Circle.	Cape Sid. Time. — Distance or P. Angle.
h m s	Scale r	° ′
0 11 23	103 296 4·012	268 35
12 10	3·764	265 56
12 47	·743	265 40
13 54	96 304 4·395	265 6
15 16	·384	268 38
16 12	·354	268 38
17 43	·511	264 58
		h m s
		0 14 2·8
		″
		303·396

Extremely faint. $\psi = 1° 36'$.

Corr. for ψ + 0″·118.

Victoria and — 5°·5006. (f) (715)

Chronometer Time.	Readings of Scale or Position Circle.	Cape Sid. Time. — Distance or P. Angle.
h m s	Scale r	° ′
0 21 5	96 304 4·640	264 59
22 44	·562	268 25
23 48	103 296 3·627	268 25
24 44	·437	265 17
		h m s
		0 23 17·0
		″
		306·121

Corr. for ψ + 0″·091.

Rotated prism 90°. $\psi = 1° 24'$.

Victoria and — 5°·5006. (f) (716)

Chronometer Time.	Readings of Scale or Position Circle.	Cape Sid. Time. — Distance or P. Angle.
h m s	Scale r	° ′
0 25 36	103 296 3·410	265 17
26 24	·480	268 27
27 25	96 304 4·686	268 27
28 34	·730	264 51
		h m s
		0 27 11·5
		″
		307·097

Corr. for ψ + ·131.

Diffused images. $\psi = 1° 41'$.

Run + 0ʳ·019.
Chronometer Correction + 11ˢ·6.
I. 2 3 ; S. 2–3, but very faint till 715 and 716, when brighter, but I. 3 : S. 3.

	h m	B in.	t °	T °
At	21 44	30·185	50·5	52·0
	23 38	30·15	49·2	47·6
	0 20			47·4
	0 30	30·17	49·1	45·4

The observations were a continual struggle against fog of varying density, the object glass had to be wiped several times to remove dew.
Planet always faint, necessitating a large displacement in Position Angle in the measurement of distance, which measurement was made by vertical juxtaposition (as in the evening observations). An 8th Magnitude Star, about 0·3 or 0·5 magnitude brighter than the planet (only 1′ distant from it and *nearly* in the line of controlling motion for the distances) rather embarrassed the judgment; it was sometimes, but could not always be, hidden by one of the bars.
Suddenly splendidly clear from 0ʰ 20ᵐ, but stars then so low that observations became scarcely easier on account of faintness of planet and diffuseness of the images. A.A.
The Position Angles noted in small type after the pointing in distance are not measures, but are only required for correcting the observations to the true distance in the line joining the stars.
Note.—In numbering the observations, the rotation No. 717 was inadvertently placed opposite the barometer and thermometer readings of this date, so that the first rotation No. of an observation on August 9 is 718. D.G.

1889, August 9. AUWERS.

Victoria and — 5°·5006. (f) (718)

Chronometer Time.	Readings of Scale or Position Circle.	Cape Sid. Time. — Distance or P. Angle.
h m s	Scale r	h m s
15 43 58	93 307 5·210	15 45 22·5
44 54	·240	″
45 36	107 294 2·910	552·913
46 17	·888	

Rotated prism 90°.

Victoria and — 5°·5006. (f) (719)

Chronometer Time.	Readings of Scale or Position Circle.	Cape Sid. Time. — Distance or P. Angle.
h m	Scale r	h m s
15 47 16	107 294 2·887	15 48 36·2
48 2	·780	″
48 45	93 307 5·351	553·950
49 37	·380	

Digitized by Google

Chronometer Time.	Readings of Scale or Position Circle.	Cape Sid. Time. — Distance or P. Angle.	Chronometer Time.	Readings of Scale or Position Circle.	Cape Sid. Time. — Distance or P. Angle.
	1889, August 9. AUWERS—*continued.*				
	Victoria and — 5°·5006. (f) (720)			Victoria and — 5°·5006. (f) (721)	
h m s	Scale r	h m s	h m s	Scale r	h m s
15 50 35	93 307 5·378	15 51 53·7	15 53 38	107 294 2·600	15 54 50·7
51 15	·468	"	54 12	·580	"
52 4	107 294 2·751	554·935	54 59	93 307 5·488	555·997
52 56	·639		55 49	·570	
	Rotated prism 90°.			Reversed Position Circle.	
	Victoria and — 5°·5006. (f) (722)			Victoria and — 5°·5006. (f) (723)	
15 58 42	93 307 5·616	h m s	16 4 18	107 294 2·352	h m s
59 42	·737	16 0 41·0	5 56	·249	16 6 25·7
16 1 10	107 294 2·420	"	6 55	93 308 1·958	"
2 25	·383	557·687	7 49	·930	559·482
	Rotated prism 90°.				
	Victoria and — 5°·5006. (f) (724)			Victoria and — 5°·5006. (f) (725)	
16 8 56	93 308 2·033	h m s	16 12 55	107 294 2·072	h m s
9 38	1·957	16 10 32·2	14 39	·036	16 15 8·5
10 52	107 294 2·130	"	15 36	93 308 2·236	"
11 58	·058	560·777	16 39	·258	562·246
	Rotated prism 90°.				
	Standard Stars. (726)			Standard Stars. (727)	
16 21 30	19 381 1·938			° ′ ′ ″ ′ ″	
22 46	·920	h m s	16 27 36	97 49 9 25 8 24	h m s
	Rotated prism 90°.	16 24 5·2	28 50	8 59 8 0	16 30 0·2
		"	30 47*	9 10 8 8	° ′ ″
24 51	180 220 2·234	6453·957	32 3	8 29 7 30	97 48 18
26 29	·142			* Prism probably rotated here but not noted.	
	Victoria and — 5°·5006. (f) (728)			Victoria and — 5°·5006. (f) (729)	
	° ′ ′			° ′ ′	
16 37 23	76 46·0 45·3	h m s	16 42 4	76 39·5 38·3	h m s
38 19	44·0 43·5	16 39 15·7	42 44	44·5 44·0	16 43 30·7
39 52	46·5 46·0	° ′ ″	43 53	47·0 47·0	° ′ ″
40 44	45·0 44·5	256 45 6	44 37	47·0 46·5	256 44 13
	Rotated prism 90°.				
	Victoria and — 5°·5006. (f) (730)			Victoria and — 5°·5006. (f) (731)	
	A B			A B	
16 45 52	76 43·0 42·5	h m s	16 51 5	76 41·5 41·0	h m s
46 32	41·0 40·5	16 47 32·0	52 3	40·5 40·0	16 52 42·7
47 56	40·0 39·5	° ′ ″	53 9	46·0 45·0	° ′ ″
49 3	40·0 39·8	256 40 47	53 49	43·0 42·0	256 42 22
	Rotated prism 90°.			Reversed Position Circle.	

Digitized by Google

Chronometer Time.	Readings of Scale or Position Circle.	Cape Sid. Time. — Distance or P. Angle.	Chronometer Time.	Readings of Scale or Position Circle.	Cape Sid. Time. — Distance or P. Angle.
1889, August 9. AUWERS—*continued.*					
	Victoria and — 5°·5006. (f) (732)			Victoria and — 5°·5006. (f) (733)	
h m s	° ′ ″	h m s	h m s	° ′ ″	h m s
16 58 15	256 42·0 41·2	17 0 6·7	17 2 16	256 33·0 32·2	17 3 46·5
59 25	44·0 43·5	° ′ ″	3 9	31·0 30·2	° ′ ″
17 0 31	34·5 33·7	256 37 58	4 8	41·5 40·5	256 36 8
1 31	32·8 32·0		4 48	40·7 40·0	
	Rotated prism 90°.				
	Victoria and — 5°·5006. (f) (734)			Victoria and — 5°·5006. (f) (735)	
17 6 30	256 45·0 44·5	h m s	17 9 58	256 30·2 29·8	h m s
7 11	38·0 37·0	17 7 53·2	10 57	30·0 29·3	17 12 0·5
8 14	31·0 30·5	° ′ ″	12 31	41·0 40·5	° ′ ″
8 53	32·0 31·0	256 36 7	13 51	42·5 41·7	256 35 37
	Rotated prism 90°.				
	Standard Stars. (736)				
	° ′ ′ ″ ′ ″				
17 17 43	277 48 8 31 7 39	h m s			
19 35	8 27 7 34	17 20 42·2			
21 53	8 4 7 16	° ′ ″			
22 53	7 53 7 5	277 47 36			

	B	t	T
h m	in	°	°
At 15 29	30·15	57·6	53·5
17 24	30·16	53·8	49·4

Run + 0ᵐ·014.
Correction for coincidence of Microscopes of Position Circle — 12″.
Chronometer Correction + 11ˢ·2.
During 718–719 I. 4 ; S. 3 } Planet always faint, at beginning very faint, because of bad definition, fog, and neighbourhood of the Moon.
720–721 I. 3–4 ; S 3–4 } Observed distances without screening the star, to have at least one easily visible object in the field.
722–725 I. 3 ; S. 3 }
726–727 I. 3–4 ; S. 3–4 } In the observations of Position Angle Screen 1 was used on the star, exactly equalizing it with planet.
728–733 I. 2–3 ; S 2–3 } With better definition the objects were then bright enough, except during the four pointings of 735, which
734–736 I. 3 ; S. 3–4 } were obtained only with difficulty.

1889, August 10. GILL.					
	Victoria and — 5°·5006. (f) (737)			Victoria and — 5°·5006. (f) (738)	
h m s	Scale r	h m s	h m s	Scale r	h m s
15 53 5	112 289 3·020	15 55 20·7	15 59 8	88 312 5·291	16 3 5·2
54 3	2·957	″	16 0 17	·316	″
55 16	88 312 5·212	953·655	2 17	112 289 2·694	955·801
58 14	·313		9 54	·513	
	Rotated prism 90°.				
	Victoria and — 5°·4992. (e) (739)			Victoria and — 5°·4992. (e) (740)	
16 16 25	118 282 5·151	h m s	16 23 3	82 319 2·983	h m s
17 44	·098	16 19 1·2	24 22	·866	16 25 19·0
20 0	82 319 2·933	″	25 24	118 282 5·401	″
21 11	·854	1452·235	27 42	·396	1451·010
	Rotated prism 90°.				

Digitized by Google

1889, August 10. GILL—*continued.*

Chronometer Time.	Readings of Scale or Position Circle.	Cape Sid. Time. — Distance or P. Angle.
	Victoria and — 5°·4992. (e) (741)	
h m s	Scale r	h m s
16 30 20	118 282 5·466	16 32 3·2
31 10	·518	"
32 4	82 319 2·699	1449·130
33 54	·591	
	Rotated prism 90°.	
	Victoria and — 5°·5006. (f) (743)	
16 44 20	112 288 5·465	h m s
45 45	·382	16 46 24·0
47 1	88 313 2·784	"
47 45	·749	968·898
	Rotated prism 90°.	
	Victoria and — 5°·5006. (f) (745)	
	° ′ ″	h m s
16 57 29	251 31·5 30·5	16 59 58·2
58 41	28·5 28·0	° ′ ″
17 1 3	30·5 30·0	251 30 11
1 55	31·5 31·0	
	Victoria and — 5°·4992. (e) (747)	
17 18 19	225 49·0 48·0	h m s
19 44	49·0 48·5	17 23 50·0
27 21	48·0 48·0	° ′ ″
29 11	45·0 44·5	45 47 30

Chronometer Time.	Readings of Scale or Position Circle.	Cape Sid. Time. — Distance or P. Angle.
	Victoria and — 5°·4992. (e) (742)	
h m s	Scale r	h m s
16 34 50	82 319 2·608	16 38 16·5
36 54	·412	"
39 48	118 282 5·629	1447·456
40 49	·749	
	Victoria and — 5°·5006. (f) (744)	
16 48 36	88 313 2·815	h m s
50 42	·893	16 51 42·2
52 6	112 288 5·204	"
54 40	·108	970·686
	Victoria and — 5°·4992. (e) (746)	
	° ′ ″	h m s
17 8 2	225 51·0 50·5	17 12 8·2
10 4	50·5 50·0	° ′ ″
14 14	51·5 50·5	45 50 26
15 28	50·0 49·5	
	Rotated prism 90°.	
	Victoria and — 5°·5006. (f) (748)	
17 33 59	251 24·5 24·0	h m s
35 55	21·0 20·5	17 36 55·0
37 6	28·0 27·5	° ′ ″
39 55	24·0 23·0	251 24 4

Run + 0ᵀ·0195.
Chronometer Correction + 11ˢ·2.
During 737–744 I. 3; S. 2.
745–748 I. 3 and 3–4; S. 2–3.

	B	t	T
h m	in.	°	°
At 15 50	30·25	58·5	57·2
17 42	30·25	57·5	57·0

1889, August 10. AUWERS.

h m s	Victoria and — 5°·5006. (f) (749)	
	° ′ ″	h m s
21 42 43	71 1·0 0·5	21 44 46·7
— 44 5	70 60·0 59·0	° ′ ″
45 23	70 57·0 56·5	250 58 45
46 9	58·5 57·5	
	Rotated prism 90°.	

h m s	Victoria and — 5°·5006. (f) (750)	
	° ′ ″	
21 47 29	70 58·5 58·0	h m s
49 12	71 1·5 0·5	21 51 23·6
51 30	70 56·0 55·5	° ′ ″
52 41	71 0·5 0·0	250 59 2
53 25	0·0 0·0	
54 24	70 59·0 58·5	

Digitized by Google

Chronometer Time.	Readings of Scale or Position Circle.	Cape Sid. Time. — Distance or P. Angle.
1889, August 10. AUWERS—*continued*.		
	Victoria and — 5°·4992. (e) (751)	
h m s	° ′ ″	h m s
21 57 59	44 40·0 39·0	21 59 39·2
58 58	40·5 40·0	° ′ ″
59 56	37·0 36·5	44 38 46
22 0 57	39·0 38·2	
	Rotated prism 90°.	
	Victoria and — 5°·4992. (e) (753)	
22 10 17 }	224 36·0 34·8	h m s
11 7 }	35·5 34·3	22 11 59·2
12 13 }	34·5 33·3	° ′ ″
12 49 }	34·8 33·8	44 34 40
13 41 }	34·8 33·5	
	Rotated prism 90°.	
	Victoria and — 5°·5006. (f) (755)	
22 21 15	250 55·2 54·3	h m s
22 1	56·5 55·2	22 22 51·5
23 13	56·5 55·2	° ′ ″
24 10	57·2 56·0	250 55 46
	Rotated prism 90°.	
	Victoria and — 5°·5006. (f) (757)	
	Scale r	
22 31 37	86 313 5·160	h m s
32 44	·110	22 33 45·0
34 24	113 287 3·023	″
35 28	2·977	1073·169
	Victoria and — 5°·4992. (e) (759)	
22 43 5	83 317 4·331	h m s
44 52	·247	22 45 41·2
46 12	116 283 3·938	″
47 49	·978	1344·701

Chronometer Time.	Readings of Scale or Position Circle.	Cape Sid. Time. — Distance or P. Angle.
	Victoria and — 5°·4992. (e) (752)	
h m s	° ′ ″	h m s
22 2 16 }	44 36·5 35·7 }	22 6 16·7
3 1 }	36·0 34·8 }	° ′ ″
4 4 }	35·0 34·3 }	44 35 35
4 49 }	34·8 34·0 }	
8 22 }	36·0 35·0 }	
8 53 }	37·0 36·2 }	
	Victoria and — 5°·4992. (e) (754)	
22 14 46	224 35·0 33·8	h m s
15 44	35·0 33·8	22 16 31·0
16 59	34·0 32·5	° ′ ″
17 48	33·8 32·2	44 33 46
	Victoria and — 5°·5006. (f) (756)	
22 25 10	250 55·3 54·3 }	h m s
26 5	55·0 54·2 }	22 27 36·0
27 54	54·2 52·8	° ′ ″
28 44	53·0 51·5	250 54 2
29 31	56·0 54·8	
30 35	53·0 51·7	
	Victoria and — 5°·4992. (e) (758)	
	Scale r	
22 38 27	116 283 3·712	h m s
39 19	·736	22 40 19·2
40 49	83 317 4·320	″
41 55	·320	1346·038
	Rotated prism 90°.	
	Victoria and — 5°·5006. (f) (760)	
22 52 31 }	113 287 2·583	
53 20 }	·449	
54 24 }	·409	h m s
58 25 }	·335	22 58 18·9
22 59 46 }	86* 314 1·874 }	″
23 0 48 }	·950 }	1079·877
1 44 }	·885 }	
2 32 }	·970 }	
3 20 }	·980 }	

	B	t	T
	h m	in.	°
At	21 29	30·21	54·8
	23 5	30 18	53·1

Run + 0ᵐ·019.
Chronometer Correction + 11ˢ·7.,
During 749–756 I. 2–3; S. 2–3. } Often cloudy, stars then faint, and never very bright, near full moon. — 5°·5006 observed with Screen 1.
„ 757–760 I. 3; S. 3–4. }
* 88 314 in original.

Digitized by Google

Chronometer Time.	Readings of Scale or Position Circle.	Cape Sid. Time. — Distance or P. Angle.	Chronometer Time.	Readings of Scale or Position Circle.	Cape Sid. Time. — Distance or P. Angle.
	1889, August 11. AUWERS.				
h m s	Victoria and — 5°·5006. (f) (761)		h m s	Victoria and — 5°·5006. (f) (762)	
15 30 3	Scale r	h m s	15 33 54	Scale r	h m s
30 52	83 317 2·168	15 31 44·6	34 32	116 284 1·900	15 35 16·4
32 14	·156	"	35 33	·864	"
33 3	116 284 1·932	1324·367	36 20	83 317 2·310	1325·203
	·848			·330	
	Rotated prism 90°.				
	Victoria and — 5°·4992. (e) (763)			Victoria and — 5°·4992. (e) (764)	
15 41 29	86 314 3·700	h m s	15 48 53	113 286 4·660	h m s
42 18	·590	15 43 19·4	49 33	·696	15 50 15·9
43 48	113 286 4·591	"	50 29	86 314 3·360	"
44 56	·527	1097·868	51 22	·392	1095·915
	Rotated prism 90°.			Reversed Position Circle.	
	Victoria and — 5°·4992. (e) (765)			Victoria and — 5°·4992. (e) (766)	
15 54 27	86 314 3·288	h m s	15 58 12	113 286 4·938	
55 33	·340	15 56 11·6	59 10	·930	
56 34	113 286 4·883	"	16 3 17	86 314 3·100	h m s
57 26	·825	1094·717	4 24	·132	16 1 55·2
	Rotated prism 90°.		5 20	2·959	"
			6 4	3·029	1093·013
	Victoria and — 5°·5006. (f) (767)			Victoria and — 5°·5006. (f) (768)	
16 8 51	83 317 3·337	h m s	16 13 12	116 283 4·692	h m s
9 43	·237	16 10 29·1	14 0	·630	16 14 51·4
10 49	116 283 4·781	"	15 18	83 317 3·532	"
11 47	·811	1335·439	16 9	·480	1337·220
	Rotated prism 90°.			Turned Position Circle to first position, the second being inconvenient for measuring Position Angles.	
	Victoria and — 5°·5006. (f) (769)			Victoria and — 5°·4992. (e) (770)	
16 18 57	° ′ ″	h m s	16 26 53	° ′ ″	h m s
21 1	248 37·0 35·5	16 21 47·9	27 46	220 50·3 49·8	16 29 22·4
22 52	34·5 34·0	° ′ ″	29 27	49·8 48·2	° ′ ″
23 35	36·0 35·2	248 35 8	32 0	44·0 43·2	40 46 17
	34·7 34·2		33 14	43·0 42·0	
				43·0 42·0	
				Rotated prism 90°.	

Digitized by Google

Chronometer Time.	Readings of Scale or Position Circle.	Cape Sid. Time. — Distance or P. Angle.	Chronometer Time.	Readings of Scale or Position Circle.	Cape Sid. Time. — Distance or P. Angle.
1889, August 11. AUWERS—*continued.*					
	Victoria and — 5°·4992. (e) (771)			Victoria and — 5°·5006. (f) (772)	
	A B			A B	
h m s	° ′ ′		h m s	° ′ ′	
16 35 16	220 40·0 39·5	h m s	16 58 35	248 33·0 32·0	h m s
36 24	40·5 40·0	16 37 23·8	59 25	30·5 30·0	17 0 37·4
37 24	45·5 45·5	° ′ ″	17 1 26	33·0 32·0	° ′ ″
38 20	46·5 46·0	40 43 7	2 17	32·0 30·7	248 31 39
38 58	46·0 45·5				
39 35	48·0 47·0				
Run + 0ᵐ·017.				B t T	
Chronometer Correction + 11ˢ·6.				h m in ° °	
During 761–762. I. 3–4.			At	15 25 30·11 60·0 57·0	
763–765. I. 2–3.				17 4 30·11 58·1 56·6	
766 I. 3–4.					
767–769. I. 3.					
770–772. I. 3–4.					
1889, August 11. GILL.					
	Victoria and — 5°·5006. (f) (773)			Victoria and — 5°·4992. (e) (774)	
	A B			A B	
h m s	° ′ ′		h m s	° ′ ′	
22 24 57	248 12·0 11·5	h m s	22 39 56	218 24·0 23·5	h m s
26 13	13·0 12·5	22 27 8·4	40 54	27·0 26·5	22 43 41·1
27 54	2·5 2·0	° ′ ″	42 1	41·5 41·0	° ′ ″
28 43	2·5 2·0	248 7 15	51 7	32·0 31·5	38 30 52
				Rotated prism 90°.	
Chronometer Correction + 11ˢ·6.				B t T	
I. 3; S. 3 4.				h m in ° °	
			At	22 22 30·10 55·2 52·5	
				23 15 30·11 55·5 55·0	
Observations only obtained by glimpses between passing clouds, and images generally very faint—object glass dewed. Sky thickly clouded up; waited till 23ʰ 15ᵐ, when all chances of further observations were over.					
1889, August 12. GILL.					
	Standard Stars. (775)				
h m s	° ′ ′ ″ ′ ″				
15 43 37	277 50 0 18 9 19	h m s		Standard Stars measured for control on zero of Position Circle at large hour angles.	
48 25	9 50 8 51	15 50 10·9			
52 42	49 0 9 6 8 7	° ′ ″			
55 12	8 28 7 28	277 48 45			

Digitized by Google

1889, August 12. GILL.—*continued.*

Victoria and — 5°·4992. (e) (776)

Chronometer Time.	Readings of Scale or Position Circle.	Cape Sid. Time. — Distance or P. Angle.
h m s	Scale r	h m s
16 0 13	90 309 5·426	16 3 12·7
1 52	·366	"
2 59	109 290 6·770	754·552
5 14	109 291 2·848	
6 29	·964	

Rotated prism 90°.

Victoria and — 5°·4992. (e) (777)

Chronometer Time.	Readings of Scale or Position Circle.	Cape Sid. Time. — Distance or P. Angle.
h m s	Scale r	h m s
16 9 3	109 291 2·950	16 12 23·7
10 55	3·040	"
13 7	90 309 5·065	752·042
15 42	4·994	

Victoria and — 5°·4992. (e) (778)

Chronometer Time.	Readings of Scale or Position Circle.	Cape Sid. Time. — Distance or P. Angle.
h m s		h m s
16 18 47	90 309 4·993	16 20 31·2
19 29	·887	"
20 44	109 291 3·197	750·588
22 17	·191	

Rotated prism 90°.

Victoria and — 5°·4992. (e) (779)

Chronometer Time.	Readings of Scale or Position Circle.	Cape Sid. Time. — Distance or P. Angle.
h m s		h m s
16 23 34	109 291 3·321	16 25 17·9
24 28	·399	"
25 24	90 309 4·790	749·194
26 58	·868	

Victoria and — 5°·4992. (e) (780)

Chronometer Time.	Readings of Scale or Position Circle.	Cape Sid. Time. — Distance or P. Angle.
h m s		h m s
16 29 17	90 309 4·749	16 31 54·4
31 10	·649	"
32 14	109 291 3·518	747·589
34 9	·579	

Rotated prism 90°.

Victoria and — 5°·4992. (e) (781)

Chronometer Time.	Readings of Scale or Position Circle.	Cape Sid. Time. — Distance or P. Angle.
h m s		h m s
16 35 38	109 291 3·600	16 39 6·2
38 19	·568	"
40 20	90 309 4·356	745·749
41 20	·383	

Victoria and — 5°·4992. (e) (782)

Chronometer Time.	Readings of Scale or Position Circle.	Cape Sid. Time. — Distance or P. Angle.
h m s		h m s
16 50 15	90 309 4·146	16 53 21·7
51 36	·063	"
53 32	109 291 3·946	742·301
57 16	4·060	

Rotated prism 90°.

Victoria and — 5°·4992. (e) (783)

Chronometer Time.	Readings of Scale or Position Circle.	Cape Sid. Time. — Distance or P. Angle.
h m s		h m s
17 4 17	109 291 4·240	17 7 36·4
6 28	·198	"
8 48	90 309 3·700	739·280
10 5	·742	

Standard Stars. (784)

Chronometer Time.	Readings of Scale or Position Circle.	Cape Sid. Time. — Distance or P. Angle.
h m s		h m s
17 14 18	19 380 5·874	17 17 43·2
15 19	·848	"
19 0	180 220 2·260	6453·368
21 28	·252	

	B	t	T
h m	in	°	°
At 15 40	30·11	62·5	60·5
17 25	30·11	60·3	59·0

Run + 0s·022.
Chronometer Correction + 11s·9.
I. 3–4 ; S. 2–3.
Much delayed by cloud, and images generally very faint, and difficult to observe. Images generally became so bad that observations were discontinued as useless.
Correction for coincidence of Microscopes of Position Circle (adopted) — 11″.

Digitized by Google

1889, August 14. GILL.

Victoria and — 5°·4992. (e) (785)

Chronometer Time.	Readings of Scale or Position Circle.	Cape Sid. Time. — Distance or P. Angle.
h m s	° ′ ″	h m s
17 51 47	328 5·0 4·0	17 54 33·2
53 12	327 55·5 54·5	° ′ ″
55 18	328 8·0 7·5	327 59 56
57 7	327 53·0 52·0	

Rotated prism 90°.

Victoria and — 5°·4992. (e) (786)

Chronometer Time.	Readings of Scale or Position Circle.	Cape Sid. Time. — Distance or P. Angle.
h m s	° ′ ″	h m s
17 58 43	327 51·0 50·5	18 1 10·7
59 58	45·5 44·5	° ′ ″
18 2 7	23·0 22·0	327 34 45
3 6	21·0 20·5	

Victoria and — 5°·4992. (e) (787)

Chronometer Time.	Readings of Scale or Position Circle.	Cape Sid. Time. — Distance or P. Angle.
	Scale r	h m s
18 4 31	103 297 5·847	18 7 8·5
6 15	·853	′
7 54	97 304 2·303	242·832
9 5	·319	

Rotated prism 90°.

Victoria and — 5°·4992. (e) (788)

Chronometer Time.	Readings of Scale or Position Circle.	Cape Sid. Time. — Distance or P. Angle.
	Scale r	h m s
18 10 30	97 304 2·287	18 12 26·0
12 1	·325	′
12 53	103 298 1·866	242·911
13 31	·807	

Victoria and — 5°·4992. (e) (789)

Chronometer Time.	Readings of Scale or Position Circle.	Cape Sid. Time. — Distance or P. Angle.
	° ′ ″	h m s
18 16 14	326 37·0 36·5	18 17 38·2
16 53	42·0 41·0	° ′ ″
17 59	47·0 46·5	326 43 19
18 38	48·5 48·0	

Rotated prism 90°.

Victoria and — 5°·4992. (e) (790)

Chronometer Time.	Readings of Scale or Position Circle.	Cape Sid. Time. — Distance or P. Angle.
	° ′ ″	h m s
18 19 48	326 43·0 42·0	18 21 34·2
20 38	40·5 40·0	° ′ ″
21 49	26·5 25·5	326 30 22
23 13	13·0 12·5	

Victoria and — 5°·4992. (e) (791)

Chronometer Time.	Readings of Scale or Position Circle.		Cape Sid. Time. — Distance or P. Angle.
	Scale r	° ′	h m s
18 25 0	103 297 5·884	325 19	18 27 3·7
26 4	103 298 1·890	327 5	′
27 25	97 304 2·244	327 5	242·398
28 57	·272	325 0	

Corr. for $\psi = +0·034$

Rotated prism 90°. $\psi = 0° 57'$.

Victoria and — 5°·4992. (e) (792)

Chronometer Time.	Readings of Scale or Position Circle.		Cape Sid. Time. — Distance or P. Angle.
	Scale r	° ′	h m s
18 29 56	97 304 2·249	325 0	18 31 50·7
30 53	·229	327 1	′
32 16	103 298 1·923	327 1	242·267
33 29	·872	324 38	

Corr. for $\psi = +0''·045$

$\psi = 1° 6'_0$

	B	t	T
	in.	°	°
At h m 17 50	30·16	58·0	54·5
18 35	30·15	56·5	53·0

Run + 0ʰ·013.
Chronometer Correction + 12ˢ·2.
During 785–788 I. 1–2; S. 1–2.
789–792 I. 1; S. 1–2.
In 791–792 the Position Angle readings only for purposes of reduction, as images were not passed through each other.
Observer's position very uncomfortable towards close of observation.
The Position Angles noted in small type after the pointing in distance are not measures, but are only required for correcting the observations to the true distance in the line joining the stars.

Digitized by Google

Chronometer Time.	Readings of Scale or Position Circle.	Cape Sid. Time. — Distance or P. Angle.	Chronometer Time.	Readings of Scale or Position Circle.	Cape Sid. Time. — Distance or P. Angle.
		1890, August 16. GILL.			
	Victoria and — 5°·4992. (e) (793)			Victoria and — 5°·4992. (e) (794)	
h m s	Scale r	h m s	h m s	Scale r	h m s
16 21 44	106 293 3·069	16 24 51·3	16 28 1	93 307 5·142	16 29 27·6
24 19	·011	"	28 46	·120	"
25 20	93 307 5·059	551·498	29 35	107 294 2·908	552·577
27 1	·099		30 27	·838	
	Rotated prism 90°.			Reversed Position Circle.	
	Victoria and — 5°·4992. (e) (795)			Standard Stars. (796)	
16 33 17	107 294 2·789	h m s	16 47 4	19 380 5·890	h m s
34 20	·794	16 35 13·8	48 26	·850	16 50 12·6
35 28	93 307 5·309	"	50 19	180 220 2·259	"
36 49	·348	553·981	54 0	·235	6453·431
				Clouds.	
	Victoria and — 5°·4992. (e) (797)			Victoria and — 5°·4992. (e) (798)	
17 10 20 }	107 293 6·116 }	h m s	18 6 2	93 308 3·009	h m s
14 49 }	107 294 2·057 }	17 25 54·1	8 22	·141	18 9 9·1
23 29 }	93 308 2·209 }	"	9 8	107 293 4·867	"
53 57 }	Clouds }	563·445	12 3	·858	572·344
	2·840 }				
	Rotated prism 90°.				
	Victoria and — 5°·4992. (e) (799)			Victoria and — 5°·4992. (e) (800)	
	° ′ ″	h m s		° ′ ″	h m s
18 16 10	245 39·5 39·0	18 19 5·8	18 24 13	245 31·5 31·0	18 26 28·3
17 13	48·0 47·5	° ′ ″	25 22	27·0 26·5	° ′ ″
20 23	22·0 21·5	245 35 4	26 39	43·5 43·0	245 33 30
21 36	32·0 31·0		28 38	33·0 32·5	
	Rotated prism 90°.				
	Victoria and — 5°·4992. (e) (801)			Victoria and — 5°·4992. (e) (802)	
18 30		h m s			h m s
31 6	245 23·5 23·0	18 32 41·8	18 36 56	245 17·0 17·0	18 41 14·6
32 58	30·0 29·5	° ′ ″	39 57	17·0 16·5	° ′ ″
35 36	19·5 19·0	245 21 49	43 2	37·0 36·5	245 23 7
	15·0 15·0		44 2	22·0 22·0	
	Rotated prism 90°.				

	B	t	T
	in.	°	°
At h m 16 40	30·40	55·0	53·5
18 46	30·39	53·5	53·0

Ran + or ·016.
Chronometer Correction + 15s·3.
During 793–795 I. 2–3; S. 2.
" 796 I. 3; S. 2–3.
" 797–802 I. 3–4; S. 3. Excessively faint and difficult; observations of very little value.

Digitized by Google

Chronometer Time.	Readings of Scale or Position Circle.	Cape Sid. Time. — Distance or P. Angle.	Chronometer Time.	Readings of Scale or Position Circle.	Cape Sid. Time. — Distance or P. Angle.
1889, August 16. AUWERS.					
	Victoria and — 5°·4992. (e) (803)			Victoria and — 5°·4992. (e) (804)	
h m s	° ′ ″	h m s	h m s	° ′ ″	h m s
21 46 36	243 52·0 50·3	21 48 52·5	21 51 45	243 60·0 59·0	21 53 35·5
48 0	54·0 52·0	° ′ ″	52 27	59·5 58·5	° ′ ″
49 22	57·0 56·5	243 54 51	54 5	46·0 45·3	243 53 16
50 32	59·0 58·0		55 5	49·5 48·3	
	Rotated prism 90°.				
	Victoria and — 5°·4992. (e) (805)			Victoria and — 5°·4992. (e) (806)	
21 56 17	243 47·5 46·7	h m s	22 0 14	243 58·5 57·2	h m s
57 8	46·0 45·0	21 57 56·8	1 13	52·0 50·5	22 2 1·3
58 16	59·5 58·0	° ′ ″	2 16	44·7 43·5	° ′ ″
59 6	55·0 53·7	243 51 25	3 22	41·5 40·3	243 48 51
	Rotated prism 90°.				
	Victoria and — 5°·4992. (e) (807)			Victoria and — 5°·4992. (e) (808)	
22 5 16	243 44·8 43·8	h m s	22 8 44	243 58·0 56·5	h m s
6 0	40·0 38·7	22 6 43·0	9 21	55·0 53·7	22 10 16·8
6 52	50·0 49·2	° ′ ″	10 40	41·0 40·0	° ′ ″
7 44	53·0 51·5	243 46 22	11 22	41·0 40·0	243 48 9
	Rotated prism 90°.				
	Victoria and — 5°·4992. (e) (809)			Victoria and — 5°·4992. (e) (810)	
22 17 28	243 37·0 36·0	h m s	22 22 3	243 49·0 47·5	h m s
18 51	39·5 38·0	22 19 32·8	25 30	44·0 42·5	22 26 56·0
20 2	52·0 50·8	° ′ ″	27 14	29·0 28·2	° ′ ″
20 50	49·0 48·0	243 43 47	28 49	28·0 26·5	243 37 11
	Rotated prism 90°.		30 26	28·0 26·7	
			31 53	32·0 30·7	
	Standard Stars. (811)				
	° ′ ′ ″ ′ ″				
22 37 45	277 47 7 13 6 19			Rather faint.	
41 51	7 18 6 14				
	Rotated prism 90°.	h m s			
44 53	9 19 8 20	22 45 45·1		Faint.	
46 51	8 13 7 14	° ′ ″		Very faint p. ½.	
50 12	9 51 8 52	277 47 26		„ „ p. ½.	
54 42	8 29 7 26			Better.	
56 42	9 0 8 1			Faint.	

Digitized by Google

Chronometer Time.	Readings of Scale or Position Circle.	Cape Sid. Time. — Distance or P. Angle.	Chronometer Time.	Readings of Scale or Position Circle.	Cape Sid. Time. — Distance or P. Angle.
		1889, August 16. AUWERS—*continued.*			
	Victoria and — 5°·4992. (e) (813)			Victoria and — 5°·4992. (e) (814)	
h m s	Scale r	h m s	h m s	Scale r	h m s
23 16 56	108 293 3·042	23 19 13·6	23 22 19	92 308 5·178	23 24 49·1
18 28	·002	"	23 13	·294	"
19 39	92 308 5·152	632·343	24 19	·149	633·882
20 52	·220		25 17	108 293 2·726	
	Rotated prism 90°.		26 55	·735	
	Victoria and — 5°·4992. (e) (815)			Victoria and — 5°·4992. (e) (816)	
23 28 39	108 293 2·780	h m s	23 32 6	92 308 5·438	h m s
29 32	·700	23 30 15·6	32 57	·436	23 33 45·8
30 29	92 308 5·380	"	34 6	108 293 2·661	"
31 23	·436	634·882	34 55	·619	635·531
	Rotated prism 90°.				
	Standard Stars. (817)				
23 42 38	180 220 2·440				
43 26	·641				
44 50	·701				
45 30	·550	h m s			
	Rotated prism 90°.	23 46 24·3			
47 0	19 380 5·489	"			
47 52	·360	6449·447			
48 33	·449				
49 25	·349				

	B	t	T
h m	in.	°	°
At 21 38	30·35	52·1	52·4
22 52	30·33	52·4	52·3
23 51	30·31	52·4	52·8

Run + 0r·019.
Correction for coincidence of Microscopes of Position Circle — 11″.
Chronometer Correction + 15s·0.
During 803–808 I. 3, faint in thin clouds, observations indifferent.
809–810 I. 3, extremely faint throughout; observations very difficult and uncertain.
812 I. 3-4. *See note.*
813–817 I. 4, Images bright enough but extremely diffused and unsteady.
Note.—The observation 812 (which is omitted) has the following note: Quite useless, scarcely visible, read only for approximate distance of the planet. A.A.
(The sky cleared at 23h 16m, and Dr. Auwers began the distances again.)

1889, August 17. AUWERS.

	Victoria and — 5°·5006. (f) (818)			Victoria and — 5°·5006. (f) (819)	
h m s	Scale r	h m s	h m s	Scale r	h m s
16 47 6	60 339 4·910	16 52 8·4	16 56 41	139 261 2·911	16 58 37·0
51 16	5·112	"	57 38	·974	"
53 56	139 261 2·929	3157·870	58 52	60 339 5·169	3158·825
55 8	·978		17 0 10	·210	
	Rotated prism 90°.				

Digitized by Google

Chronometer Time.	Readings of Scale or Position Circle.	Cape Sid. Time. / Distance or P. Angle.	Chronometer Time.	Readings of Scale or Position Circle.	Cape Sid. Time. / Distance or P. Angle.
1889, August 17. AUWERS—*continued.*					
	Victoria and — 6°·5151. (a) (820)			Victoria and — 6°·5151. (a) (821)	
h m s	Scale r	h m s	h m s	Scale r	h m s
17 6 8	55 345 3·890	17 11 35·2	17 17 56	144 255 4·547	17 20 1·4
7 19	·881	"	18 53	·476	"
15 6	144 255 4·422	3585·912	20 21	55 345 3·503	3583·601
16 40	·381		21 48	·570	
	Rotated prism 90°.				
				Victoria and — 6°·5151. (a) (822)	
			17 25 52	55 345 3·365	h m s
			27 15	·425	17 29 14·2
			30 34	144 255 4·674	"
			32 8	·790	3581·780

Run + 0r·017.
Chronometer Correction + 16s·9.
Till 17h 19m I. 3, after that I. 4.
Observed through thin cloud; Victoria always very faint, and sometimes extremely faint—pointings difficult and uncertain. Could not finish observations because cloud became too thick.—A. A.

	B	t	T
h m	in.	°	°
At 16 37	30·18	63·5	64·0
17 23	30·17	63·0	64·2

1890, August 18. GILL.					
	Victoria and — 5°·5006. (f) (823)			Victoria and — 5°·5006. (f) (824)	
h m s	Scale r	h m s	h m s	Scale r	h m s
16 48 24 }	142 258 4·190 }	16 51 10·9	16 55 45	57 342 4·060	16 59 17·7
49 40 }	·155 }	"	57 1	·074	"
51 24 }	57 342 4·103 }	3387·359	17 0 37	142 258 3·879	3389·021
52 19 }	3·910 }		2 35	·859	
53 3 }	4·042 }				
54 7 }	·105 }				
	Rotated prism 90°.				
	Victoria and — 6°·5151. (a) (825)			Victoria and — 6°·5151. (a) (826)	
17 6 19	142 258 5·260	h m s	17 11 57	58 343 2·714	h m s
7 5	·229	17 8 44·7	13 6	·760	17 17 2·2
9 37	58 343 2·728	"	19 16	142 258 5·488	"
10 45	·658	3375·211	22 37	·538	3374·081
	Rotated prism 90°.				
	Victoria and — 6°·5151. (a) (827)			Victoria and — 6°·5151. (a) (828)	
17 23 17	142 258 5·500	h m s	17 27 43	58 343 3·454	h m s
23 58	·499	17 25 9·0	28 24	·420	17 29 28·7
25 15	58 343 2·510	"	29 49	142 258 5·568	"
26 53	·504	3372·992	30 46	·588	3372·245
	Rotated prism 90°.				

Digitized by Google

Chronometer Time.	Readings of Scale or Position Circle.	Cape Sid. Time. Distance or P. Angle.	Chronometer Time.	Readings of Scale or Position Circle.	Cape Sid. Time. Distance or P. Angle.
1890, August 18: GILL—*continued*.					
	Victoria and — 5°·5006. (f) (829)			Victoria and — 5°·5006. (f) (830)	
h m s	Scale r	h m s	h m s	Scale r	h m s
17 35 54	142 258 3·238	17 38 45·5	17 42 8	57 342 4·990	17 44 45·7
37 4	·203	"	43 0	·966	"
40 3	57 342 4·888	3396·482	44 25	142 258 3·141	3397·621
40 48	·914		45 55	·008	
			47 5	·047	
			47 59	·087	
				B t T	
				h m in ° °	
				At 16 46 30·15 64·8 60·0	
				17 49 30·15 61·5 57·5	

Run + or ·016.
Chronometer Correction + 18ˢ·2.
During 823-826 I. 3 ; S. 2-3 but excessively faint through thin cloud
827-829 I. 2-3 ; S. 2, still faint, but brighter than before.
830. At 17ʰ 44ᵐ images suddenly became 3-4.

1889, August 19. AUWERS.

	Victoria and — 5°·5006. (f) (831)			Victoria and — 5°·5006. (f) (832)	
h m s	Scale r	h m s	h m s	Scale r	h m s
17 45 32	55 346 2·338	17 47 42·6	17 51 13	145 255 5·629	17 52 59·9
46 56	·410	"	51 56	·581	"
48 4	145 255 5·592	3612·500	53 21	55 346 2·389	3612·445
49 4	·552		54 15	·403	
	Rotated prism 90°.				
	Victoria and — 6°·5151. (a) (833)			Victoria and — 6°·5151. (a) (834)	
17 58 18	60 340 4·777	h m s	18 3 16	140 261 3·372	h m s
58 59	·819	18 0 8·9	5 42	·374	18 6 21·1
18 0 27	140 261 3·230	"	7 9	60 340 4·620	"
1 37	·276	3195·291	8 3	·658	3193·887
	Rotated prism 90°.				
	Victoria and — 6°·5151. (a) (835)			Victoria and — 6°·5151. (a) (836)	
18 13 7	60 340 4·541	h m s	18 16 34	140 261 3·656	
14 8	·589	18 14 53·1	17 12	·598	
15 9	140 261 3·508	"	18 5	·542	h m s
15 54	·440	3193·007	18 19 39	60 340 4·467	18 19 58·9
			20 48	·555	"
	Rotated prism 90°.		22 37	·364	3191·656
			23 28	·366	
			24 5	·360	

Digitized by Google

Chronometer Time.	Readings of Scale or Position Circle.	Cape Sid. Time. — Distance or P. Angle.	Chronometer Time.	Readings of Scale or Position Circle.	Cape Sid. Time. — Distance or P. Angle.
	1889, August 19. AUWERS—*continued.*				
	Victoria and — 5°·5006. (f) (837)			Victoria and — 5°·5006. (f) (838)	
h m 18 28 4 28 48 30 8 31 7	Scale r 55 346 3·040 ·018 145 255 4·990 5·011 Rotated prism 90°.	h m s 18 29 50·4 ″ 3618·671	h m 18 32 47 33 48 34 24 35 54 36 43	Scale r 145 255 4·890 ·904 ·816 55 346 3·189 ·161	h m s 18 35 23·2 ″ 3620·130

Run + 0r·016.
Chronometer Correction + 18s·6.

	h m	B in.	t °	T °
At	17 35	30·20	58·5	56·4
	18 38	30·21	58·0	56·1

During 831–832 I. 3–4, faint, and therefore star not screened.
„ 833–835 I. 2–3, brighter, used screen from here.
„ 836, I. 3–4, and sometimes very faint.
„ 837–838 I, sometimes 4, sometimes 3–4, and sometimes faint.
Sky misty, planet never bright and often considerably faint. The mist only became thin enough to observe through it when the planet was already very high, and the second half of the observation was made in an extremely uncomfortable position of the observer, which may have considerably increased the errors of pointing at the faint and very diffused images. A.A.

	1889, August 19. GILL.				
	Victoria and — 5°·4985. (c) (839)			Victoria and — 5°·4985. (c) (840)	
h m s 21 46 31 47 28 48 28 49 33	Scale r 122 278 3·826 ·860 77 322 4·185 ·120 Rotated prism 90°.	h m s 21 48 18·8 ″ 1785·736	h m s 21 50 41 52 15 53 3 54 2 59 59	Scale r 77 322 4·257 ·286 ·149 122 278 3·786 ·711 Cloud.	h m s 21 54 56·8 ″ 1786·504
	Victoria and — 5°·4989. (d) (841)			Victoria and — 5°·4989. (d) (842)	
23 9 16 13 35 15 16 17 46	114 286 5·632 ·518 86 315 2·302 ·188 Rotated prism 90°.	h m s 23 14 17·1 ″ 1125·850	23 27 33 28 27 29 12 30 26	86 315 2·146 ·085 114 287 1·915 ·874	h m s 23 29 13·3 ″ 1123·735
	Victoria and — 5°·4989. (d) (843)			Victoria and — 5°·4989. (d) (844)	
23 32 5 33 15 34 6 35 9	114 286 5·830 6·012 86 314 6·111 ·109 Rotated prism 90°.	h m s 23 33 57·6 ″ 1123·505	23 36 12 37 18 38 57 40 14	86 314 6·070 5·880 114 287 2·075 1·975	h m s 23 38 29·1 ″ 1122·445

Digitized by Google

Chronometer Time.	Readings of Scale or Position Circle.	Cape Sid. Time. — Distance or P. Angle.	Chronometer Time.	Readings of Scale or Position Circle.	Cape Sid. Time. — Distance or P. Angle.
	1889, August 19. GILL—*continued.*				
	Victoria and — 5°·4985. (c) (845)			Victoria and — 5°·4985. (c) (846)	
h m s	Scale r	h m s	h m s	Scale r	h m s
23 43 39	122 278 2·297	23 46 31·3	23 49 25	77 322 5·730	23 52 24·3
45 59	·376	"	51 35	·754	"
47 9	77 322 5·698	1801·155	52 38	122 278 2·321	1801·454
48 3	·718		54 44	·301	
	Rotated prism 90°.				

Run + or ·019.
Chronometer Correction + 18ˢ·8.
Long obscuration by cloud after 840. I. during observations probably 2–3, but so faint through dense haze that their quality could not be estimated properly. The planet was only just visible throughout the observations; altogether the observations are probably only useful for place of planet, but unfit for parallax determination. D.G.

	B	t	T
h m	in.	°	°
At 21 45	30·20	55·3	51·0
23 56	30·18	53·2	50·3

1889, August 20. AUWERS.

	Victoria and — 5°·4989. (d) (847)			Victoria and — 5°·4989. (d) (848)	
h m s	Scale r	h m s	h m s	Scale r	h m s
22 0 51	88 312 4·870	22 3 7·4	22 6 16	111 288 3·319	22 8 28·1
2 0	·854	"	7 19	·301	"
3 15	111 288 3·250	950·286	9 1	88 312 4·809	949·650
5 5	·244		9 58	·788	
	Rotated prism 90°.				
	Victoria and — 5°·4989. (d) (849)			Victoria and — 5°·4989. (d) (850)	
22 12 44	88 312 4·734	h m s	22 18 3	111 288 3·410	h m s
13 26	·687	22 14 46·9	18 52	·448	22 19 25·4
15 2	111 288 3·391	"	19 44	88 312 } 4·704	"
16 37	·411	948·748	20 49	* }	948·575
	Rotated prism 90°.			* One reading not printed. Assumed as above.	
	Standard Stars. (851)				
22 26 21	,19 381 1·950				
27 28	·954				
	Rotated prism 90°.				
22 28 29	1·939				
29 44	·887	h m s			
31 15	180 220 2·247	22 30 35·5			
32 3	·207	"			
	Rotated prism 90°.	6453·790			
22 32 43	2·236				
34 4	·208				

Digitized by Google

1889, August 20. AUWERS—*continued.*

Victoria and — 5°·4989. (d) (852)

Chronometer Time.	Readings of Scale or Position Circle.	Cape Sid. Time. — Distance or P. Angle.
h m s	Scale r	h m s
22 40 38	111 288 3·698	22 44 14·1
41 31	·670	"
42 46	88 312 4·291	945·112
50 43	·251	

Rotated prism 90°.

Victoria and — 5°·4989. (d) (853)

Chronometer Time.	Readings of Scale or Position Circle.	Cape Sid. Time. — Distance or P. Angle.
h m s	Scale r	h m s
22 52 15	88 312 4·329	22 54 14·1
52 58	·295	"
54 27	111 288 3·889	944·422
55 58	·835	

Victoria and — 5°·4989. (d) (854)

Chronometer Time.	Readings of Scale or Position Circle.	Cape Sid. Time. — Distance or P. Angle.
h m s		h m s
22 56 56	111 288 3·852	22 58 41·9
57 45	·899	'
58 47	88 312 4·238	943·777
23 0 1	·157	

Rotated prism 90°.

Victoria and — 5°·4989. (d) (855)

Chronometer Time.	Readings of Scale or Position Circle.	Cape Sid. Time. — Distance or P. Angle.
h m s		h m s
23 1 6	88 312 4·231	23 2 47·6
1 49	·201	"
3 1	111 288 3·988	943·500
3 56	·910	

Run + 0ᵈ·018.
Chronometer Correction + 19ˢ·6.
During 847–851, I. 3–4, sometimes clouds and sometimes faint.
852–853, I. 4 and very faint.
854–855 I. 3–4 and brighter than before.

	h m	B in.	t °	T °
At	21 49	30·23	57·8	53·2
	23 5	30·23	56·5	52·3

1889, August 21. AUWERS.

Victoria and — 5°·4992. (e) (856)

Chronometer Time.	Readings of Scale or Position Circle.	Cape Sid. Time. — Distance or P. Angle.
h m s	Scale r	h m s
16 15 26	78 321 3·418	16 17 31·2
16 37	·476	"
17 53	121 279 4·645	1697·887
18 45	·659	

Rotated prism 90°.

Victoria and — 5°·4992. (e) (857)

Chronometer Time.	Readings of Scale or Position Circle.	Cape Sid. Time. — Distance or P. Angle.
h m s	Scale r	h m s
16 19 46	121 279 4·601	16 22 22·6
21 13	·604	"
22 6	78 321 3·416	1698·429
23 21	·536	
24 7	·475	
24 41	·592	

Victoria and — 6°·5158. (b) (858)

Chronometer Time.	Readings of Scale or Position Circle.	Cape Sid. Time. — Distance or P. Angle.
h m s		h m s
16 27 55	65 334 4·540	16 30 46·5
28 37	·385	"
29 25	·446	2749·707
29 59	·310	
31 2	134 266 3·749 p. ½	
32 19	·860	
33 6	·780	

Rotated prism 90°.

Victoria and — 6°·5158. (b) (859)

Chronometer Time.	Readings of Scale or Position Circle.	Cape Sid. Time. — Distance or P. Angle.
h m s		h m s
16 34 9	134 266 3·889	16 36 6·9
35 4	·926	"
36 4	66 335 4·121	2747·649
37 47	·160	

Digitized by Google

1889, August 21. AUWERS—*continued.*

Victoria and — 6°·5158. (b) (860)

Chronometer Time.	Readings of Scale or Position Circle.	Cape Sid. Time. — Distance or P. Angle.
h m s	Scale r	h m s
16 38 58	66 335 4·158	16 40 58·2
40 2	·190	"
41 24	134 266 4·103	2747·071
42 5	·009	
	Rotated prism 90°.	

Victoria and — 6°·5158. (b) (861)

Chronometer Time.	Readings of Scale or Position Circle.	Cape Sid. Time. — Distance or P. Angle.
h m s	Scale r	h m s
16 43 18 }	134 266 3·868 }	16 46 40·9
44 49 }	·980 } p. ½	"
45 51 }	·964 }	2747·292
47 7 }	66 335 4·19 }	
47 57 }	·017 }	
48 42 }	·080 }	
49 17 }	·034 }	

Victoria and — 5°·4992. (e) (862)

Chronometer Time.	Readings of Scale or Position Circle.	Cape Sid. Time. — Distance or P. Angle.
h m s	Scale r	h m s
16 53 23 }	79 322 3·910 }	16 56 48·3
54 52 }	78 321 4·067 }	"
55 55 }	3·970 }	1703·732
56 56 }	121 279 4·111 }	
57 54 }	3·969 }	
58 29 }	4·114 }	
59 18 }	4·006 }	
	Rotated prism 90°.	

Victoria and — 5°·4992. (e) (863)

Chronometer Time.	Readings of Scale or Position Circle.	Cape Sid. Time. — Distance or P. Angle.
h m s	Scale r	h m s
17 0 43 }	121 279 3·831 }	17 3 41·3
2 5 }	·783 } p. ½	"
2 48 }	·850 }	1706·589
3 54	78 321 4·312	
5 2	·392	

Run + or ·019.
Chronometer Correction + 20ˢ·9.

	B	t	T
h m	in.	°	°
At 15 50	30·23	61·7	58·8
16 30	...	...	58·6
17 7	30·24	60·4	58·8

* The pointings at 16ʰ 32ᵐ 19ˢ, 16ʰ 44ᵐ 49ˢ, and 17ʰ 0ᵐ 43ˢ, being made with extra diffused images, have received half weight in the combinations in which they occur.

I. generally 3-4, sometimes 4. No screen was used, because the diffused images would have been too faint both together. There may, therefore, on account of the considerable inequality of the two objects in brightness, be a considerable personality, which can only be eliminated by taking the mean of observations made in two positions of the prism. A.A.

1889, August 21. GILL.

Victoria and — 5°·4989. (d) (864)

Chronometer Time.	Readings of Scale or Position Circle.	Cape Sid. Time. — Distance or P. Angle.
h m s	Scale r	h m s
21 58 18	88 311 3·156	22 2 10·5
59 51	2·961	"
22 4 34	111 289 5·066	891·965
	Stopped by cloud.	

Run (assumed) + 0ˢ·019.
Chronometer Correction + 21ˢ·2.
Only three pointings obtained; definition very bad.

	B	t	T
h m	in	°	°
At 21 46	30·26	58·6	58·0

Digitized by Google

Chronometer Time.	Readings of Scale or Position Circle.	Cape Sid. Time. / Distance or P. Angle.	Chronometer Time.	Readings of Scale or Position Circle.	Cape Sid. Time. / Distance or P. Angle.
		1889, August 22. GILL.			
	Victoria and — 5°·4989. (d) (865)			Victoria and — 5°·4989. (d) (866)	
h m s	° ′ ″	h m s	h m s	° ′ ″	h m s
16 24 55	118 58·0 57·5	16 27 45·8	16 31 17	118 39·0 38·5	16 34 6·5
26 46	53·0 52·5	° ′ ″	32 44	35·5 34·5	° ′ ″
28 23	40·5 40·0	298 46 52	34 43	45·0 44·5	298 39 49
29 37	37·0 36·5		36 20	41·0 40·5	
	Rotated prism 90°.				
	Victoria and — 5°·4989. (d) (867)			Victoria and — 5°·4989. (d) (868)	
16 38 55	118 40·0 39·5	h m s	16 45 29	118 21·0 20·5	h m s
40 31	36·0 35·0	16 41 37·5	46 54	20·0 19·5	16 47 50·8
42 23	28·0 27·5	° ′ ″	48 15	31·5 31·0	° ′ ″
43 19	30·0 30·0	298 32 15	49 23	30·5 30·5	298 25 34
	Rotated prism 90°.			Reversed Position Circle.	
	Victoria and — 5°·4989. (d) (869)			Victoria and — 5°·4989. (d) (870)	
16 53 41	298 25·0 24·5	h m s	16 59 20	298 15·0 14·0	h m s
55 7	25·0 24·5	16 56 10·8	17 2 11	16·0 15·0	17 2 51·5
56 25	17·5 16·5	° ′ ″	3 49	16·5 16·0	° ′ ″
58 8	13·0 12·5	298 19 49	4 44	17·5 17·0	298 15 52
	Rotated prism 90°.				
	Victoria and — 5°·4989. (d) (871)			Victoria and — 5°·4989. (d) (872)	
17 6 19	298 12·0 11·5	h m s	17 10 44	298 5·0 4·5	h m s
7 10	14·0 13·5	17 8 22·5	12 39	0·5 0·0	17 13 48·3
9 0	9·0 8·5	° ′ ″	14 26	4·0 3·5	° ′ ″
9 39	7·5 6·5	298 10 19	16 2	5·5 5·0	298 3 30
	Rotated prism 90°.				
	Standard Stars. (873)			Standard Stars. (874)	
	° ′ ′ ″ ′ ″	h m s		Scale r	
17 20 6	277 49 8 28 7 31	17 25 10·5	17 33 58	19 381 1·970	h m s
23 55	8 30 7 32	° ′ ″	35 45	·912	17 37 5·3
26 45	48 7 55 7 7	277 47 27	37 42	180 220 2·246	″
28 34	7 40 6 47		39 8	·146	6454·043
			40 0	·094	
	Victoria and — 5°·4989. (d) (875)			Victoria and — 5°·4989. (d) (875)	
	Scale r	h m s			h m s
17 44 3	108 293 2·540	17 45 59·5	17 48 3	92 308 5·652	17 49 33·3
45 21	·500	″	48 42	·642	″
46 14	92 308 5·632	636·971	49 36	108 293 2·564	637·036
46 58	·580		50 30	·532	
	Rotated prism 90°.				

Digitized by Google

1889, August 22. GILL—*continued.*

Victoria and — 5°·4989. (d) (877)

Chronometer Time.	Readings of Scale or Position Circle. Scale r	Cape Sid. Time. — Distance or P. Angle.
h m s		h m s
17 51 9	108 293 2·606	17 52 49·8
51 59	·527	"
52 56	92 308 5·606	636·593
53 53	·549	
	Rotated prism 90°.	
17 54 39	92 308 5·570	17 56 15·0
55 19	·535	"
56 20	108 293 2·532	636·503
57 20	·587	

Victoria and — 5°·4989. (d) (878)

Run + 0ᵈ·015.
Chronometer Correction + 20ˢ·5.
Correction for coincidence of Microscopes of Position Circle — 14″.
During 865–874, I. 3; S. 2.
875–878, I. 2·3; S. 2.

	h m	B in.	t °	T °
At	16 23	30·17	64·5	61·8
	17 59	30·16	62·0	62·0

1889, August 22. AUWERS.

Victoria and — 5°·4989. (d) (879)

Chronometer Time.	Readings of Scale or Position Circle. ° ′ ′	Cape Sid. Time. — Distance or P. Angle.
h m s		h m s
21 55 41	293 49·5 48·5	21 57 32·6
56 47	49·7 48·7	° ′ ″
57 44	56·0 55·0	293 51 54
58 35	54·3 53·5	
	Rotated prism 90°.	
21 59 51	293 51·0 50·2	22 1 52·3
22 1 2	49·7 48·5	° ′ ″
2 15	44·0 43·0	293 47 12
2 58	46·2 45·0	

Victoria and — 5°·4989. (d) (880)

Reversed Position Circle.

Victoria and — 5°·4989. (d) (881)

22 5 30	113 40·0 39·2	22 7 6·1	
6 13	40·0 39·5	° ′ ″	
7 13	42·0 41·0	293 40 50	
8 6	43·0 42·0		
	Rotated prism 90°.		
22 8 52	113 40·0 39·7	22 11 11·1	
9 44	45·0 44·2	° ′ ″	
10 48	42·0 41·0	293 39 1	
11 42	37·0 36·5		
12 32	37·0 35·8		

Victoria and — 5°·4989. (d) (882)

Victoria and — 5°·4989. (d) (883)

22 14 43	92 308 3·778	22 16 36·2	
15 40	·749	"	
16 47	107 292 4·450	618·168	
17 52	·374		
	Rotated prism 90°.		
22 18 46	107 292 4·478	22 20 18·8	
19 24	·470	"	
20 25	92 308 3·732	617·582	
21 17	·686		

Victoria and — 5°·4989. (d) (884)

Victoria and — 5°·4989. (d) (885)

22 22 45	92 308 3·680	22 24 44·6	
23 48	·672	"	
25 0	107 292 4·513	617·419	
26 2	·434		
	Rotated prism 90°.		
22 26 58	107 292 4·469	22 28 37·1	
27 49	·464	"	
28 40	92 308 3·638	617·103	
29 38	·575		

Victoria and — 5°·4989. (d) (886)

Digitized by Google

Chronometer Time.	Readings of Scale or Position Circle.	Cape Sid. Time. / Distance or P. Angle.	Chronometer Time.	Readings of Scale or Position Circle.	Cape Sid Time. / Distance or P. Angle.
	1889, August 22. AUWERS—*continued.*				
	Standard Stars. (887)			Standard Stars. (888)	
h m s	Scale r		h m s	° ′ ′ ″ ′ ″	
22 35 19	19 381 1·860		22 37 53	97 47 7 31 6 45	
36 38	·888	h m s	40 1	7 10 6 12	h m s
	Rotated prism 90°.	22 42 11·6		Rotated prism 90°.	22 41 29·8
47 9	180 220 2·221	″	42 30	8 19 7 22	° ′ ″
48 17	·196	6453·576	44 12	7 56 7 0	97 47 6
	Victoria and — 5°·4989. (d) (889)			Victoria and — 5°·4989. (d) (890)	
22 52 28	107 292 4·695	h m s		Scale	
53 19	·644	22 54 21·6	22 57 9	92 308 3·393	
54 4	92 308 3·446	″	57 58	·481	h m s
56 12	·431	615·236	59 7	107 292 4·669	22 59 27·1
	Rotated prism 90°.		23 0 15	·781	″
			0 52	·750	614·952
			2 22	·697	
	Victoria and — 5°·4989. (d) (891)			Victoria and — 5°·4989. (d) (892)	
23 3 39	107 292 4·800	h m s	23 7 14	92 308 3·304	
4 29	·755	23 5 13·3	7 54	·311	
5 13	92 308 3·420	″	8 32	·319	h m s
6 9	·430	614·625	10 14	107 292 4·841	23 10 9·7
	Rotated prism 90°.		10 57	·787	″
			11 44	·790	613·843
			13 24	·867	

Run + 0r·017.
Correction for coincidence of Microscopes of Position Circle — 11″.
Chronometer Correction + 20s·8.
During 879–886 I. 3 ; S. 3
887–888 I. 3–4 ; S. 3 (except last two parts of Standard Stars when I. 4 ; S. 4).
889–892 I. 4 ; S. 4.

	B	t	T
h m	in.	°	°
At 21 42	30·13	58·8	53·2*
23 15	30·10	57·3	58·2

* It has been assumed that this reading should be 58°·2.

	1889, August 23. AUWERS.				
	Standard Stars. (893)				
h m s	Scale r				
16 35 21	19 380 5·811				
36 10	·969	h m s			
37 18	·788	16 37 46·5			
38 29	180 220 2·197	″			
39 10.	·202	6453·554			

Digitized by Google

Chronometer Time.	Readings of Scale or Position Circle.	Cape Sid. Time. — Distance or P. Angle.	Chronometer Time.	Readings of Scale or Position Circle.	Cape Sid. Time. — Distance or P. Angle.
	1889, August 23. AUWERS—*continued.*				
	Victoria and — 5°·4989. (d) (894)			Victoria and — 5°·4989. (d) (895)	
h m s	Scale r	h m s	h m s	Scale r	h m s
16 42 42	106 294 2·191	16 44 20·3	16 46 30	93 307 1·927	16 48 8·8
43 34	·203	"	47 19	·871	"
44 24	93 307 1·935	519·907	48 21	106 294 2·235	519·377
45 19	·955		49 3	·278	
	Rotated prism 90°.				
	Victoria and — 5°·4989. (d) (896)			Victoria and — 5°·4989. (d) (897)	
16 50 33	106 294 2·290	h m s	16 53 50	93 307 1·993	h m s
51 23	·273	16 52 3·0	54 33	·950	16 55 33·5
52 5	93 307 1·949	"	55 46	106 294 2·254	"
52 49	·913	519·410	56 43	·318	519·592
	Rotated prism 90°.				
	Victoria and — 5°·4989. (d) (898)			Victoria and — 5°·4989. (d) (*899)	
	° ′ ″			° ′ ″	
17 0 25	274 58·5 57·3	h m s	17 5 28	274 47·0 46·0	h m s
2 2	58·5 57·3	17 2 45·8	12 31	46·0 45·5	17 12 20·3
3 12	56·3 55·7	° ′ ″	14 3	45·5 44·7	° ′ ″
4 2	52·0 50·8	274 55 48	15 57	44·0 42·8	274 45 11
	Rotated prism 90°.				(*See* Foot note).
	Victoria and — 5°·4989. (d) (900)			Victoria and — 5°·4989. (d) (901)	
17 18 42	274 43·5 42·0				
20 44	28·0 27·0	h m s	17 25 38	274 34·0 32·5	h m s
21 42	36·5 35·0	17 22 52·0	26 15	30·5 30·0	17 27 9·8
22 34	34·0 32·0	° ′ ″	27 20	24·0 22·5	° ′ ″
23 44	36·5 35·5	274 33 43	28 4	24·0 23·5	274 27 37
24 31	30·0 29·0				
	Rotated prism 90°.				
	Standard Stars. (902)				
	° ′ ′ ″ ′ ″				
17 34 48	277 48 8 29 7 36	h m s			
36 41	8 4 7 10	17 38 10·5			
	Rotated prism 90°.	° ′ ″			
39 10	8 17 7 19	277 47 30			
40 41	7 57 6 58				

Run +0ˢ·018.
Correction for coincidence of Microscopes of Position Circle — 14″.
Chronometer Correction + 20ˢ·5.

	B	t	T
h m	in.	°	°
At 16 3	30·10	66·8	59·7
17 45	30·12	61·8	57·0

I. generally 3, but planet rather faint, sky not quite clear. Distances good, Position Angle not satisfactory.
* The minutes of Circle readings of (899) have been diminished by 10′ throughout in accordance with following note :—
Reglancing at the observations beginning 17ʰ 18ᵐ the observer remarked the readings being much smaller, and felt at once uncertain whether the previous readings might not be affected with a constant error of 10′. Evidently this mistake has been made since 17ʰ 5ᵐ, the observer continuing to count 50′ from the first set, instead of 40′. A.A.

Digitized by Google

Chronometer Time.	Readings of Scale or Position Circle.	Cape Sid. Time. / Distance or P. Angle.	Chronometer Time.	Readings of Scale or Position Circle.	Cape Sid. Time. / Distance or P. Angle.
		1889, August 23. GILL.			
	Victoria and — 5°·4989. (d) (903)			Victoria and — 5°·4989. (d) (904)	
h m s	° ′ ″	h m s	h m s	° ′ ″	h m s
21 38 37	269 31·5 31·0	21 41 54·8	21 46 39	269 10·5 10·0	21 49 44·1
40 9	30·0 30·0	° ′ ″	47 51	8·5 8·0	° ′ ″
42 28	23·0 22·5	269 24 54	50 51	18·5 18·0	269 12 49
43 16	21·0 20·5		52 12	15·0 14·0	
43 55	19·5 19·0				
45 21	14·0 14·0				
	Rotated prism 90°.				
	Victoria and — 5°·4989. (d) (905)			Victoria and — 5°·4989. (d) (906)	
21 53 30	269 18·5 18·0	h m s	22 3 37	268 47·0 47·0	h m s
54 32	14·0 13·5	21 57 34·3	6 4	46·0 45·5	22 8 28·8
58 56	268 54·5 54·0	° ′ ″	9 23	59·0 58·5	° ′ ″
22 1 56	45·0 45·0	269 2 49	13 28	53·0 52·5	268 51 4
	Rotated prism 90°.				
	Standard Stars. (907p)			Standard Stars. (907s)	
	° ′ ′ ″ ′ ″	h m s		Scale r	h m s
22 18 37	277 49 8 36 7 34	22 27 22·6	22 24 3	180 220 2·214	22 27 37·8
21 26	8 8 7 12	° ′ ″	25 59	·210	″
32 21	47 7 39 6 41	277 47 12	29 3	19 381 1·884	6453·522
35 43	7 12 6 14		30 3	·850	
	Victoria and — 5°·4989. (d) (908)			V c oria and — 5°·4989. (d) (909)	
	Scale r				
22 42 54	93 306 5·100	h m s	22 48 42	106 294 3·069	h m s
44 45	·060	22 45 32·6	49 55	2·997	22 52 26·1
46 9	106 294 3·010	″	53 19	93 306 5·103	″
46 59	2·995	511·589	56 25	·070	511·467
	Rotated prism 90°.				
	Victoria and — 5°·4989. (d) (910)			Victoria and — 5°·4989. (d) (911)	
22 57 49	93 306 5·129	h m s	23 5 1	106 294 3·081	h m s
59 7	4·978	23 1 35·8	6 10	·068	23 7 2·3
59 48	5·052		7 12	93 306 5·046	″
23 2 56	106 294 3·049	511·063	8 23	·011	510·967
3 48	·111				
	Rotated prism 90°.				

Digitized by Google

Chronometer Time.	Readings of Scale or Position Circle.	Cape Sid. Time. — Distance or P. Angle.	Chronometer Time.	Readings of Scale or Position Circle.	Cape Sid. Time. — Distance or P. Angle.
	1889, August 23. GILL—*continued.*				
	Victoria and — 5°·4989. (d) (912)			Victoria and — 5°·4989. (d) (913)	
h m s	Scale r		h m s	Scale r	
23 10 52	93 306 5·062	h m s	23 18 55	106 294 3·088	
12 17	4·978	23 14 5·2	20 31	·180	h m s
13 52	106 294 3·049		22 30	93 306 5·115	23 22 32·3
15 9	·149	510·554	24 44	4·890	
17 18	·197		25 43	·909	510·301
	Rotated prism 90°.				

Run + 0r·020.
Chronometer Correction + 20s·8.
Correction for coincidence of Microscopes of Position Circle — 12″.
During 903–906, I. 3 ; S 3.
„ 907–912, I. 2–3 ; S 3.
„ 913, I. 4, then clouded.

	B	t	T
h m	in.	°	
At 21 35	30·14	59·5	57·5
23 30	30·15	57·2	54·3

1890, August 24. AUWERS.

	Victoria and — 5°·4989. (d) (914)			Victoria and — 5°·4989. (d) (915)	
m s	Scale r		h m s	Scale r	
23 1 39	93 306 4·699	h m s	23 5 39	106 294 3·368	h m s
2 40	·726	23 3 31·3	6·27	·328	23 7 32·5
3 40	106 294 3·361	"	7 46	93 306 4·710	"
4 42	·309	508·059	8 54	·724	508·016
	Rotated prism 90°.				
	Victoria and — 5°·4989. (d) (916)			Victoria and — 5°·4989. (d) (917)	
23 11 59	93 306 4·833	h m s	23 15 37	106 294 3·248	h m s
12 58	·801	23 13 44·3	16 33	·300	23 17 44·5
13 51	106 294 3·234	"	18 5	93 306 4·831	"
14 45	·310	508·902	19 19	·821	508·938
	Rotated prism 90°.				
	Victoria and — 5°·4989. (d) (918)			Victoria and — 5°·4989. (d) (919)	
°	′ ″			° ′ ″	
23 22 7	235 42·0 41·0	h m s	23 26 11	235 55·0 53·8	h m s
23 1	41·5 40·3	23 24 3·8	27 2	51·0 49·8	23 27 48·8
24 27	59·5 58·3	° ′ ″	27 56	37·0 36·0	° ′ ″
25 16	57·5 56·7	235 49 36	28 42	32·5 31·2	235 43 17
	Rotated prism 90°.				

Digitized by Google

Chronometer Time.	Readings of Scale or Position Circle.	Cape Sid. Time. — Distance or P. Angle.	Chronometer Time.	Readings of Scale or Position Circle.	Cape Sid. Time. — Distance or P. Angle.
1890, August 24. AUWERS—*continued.*					
	Victoria and — 5°·4989. (d) (920)			Victoria and — 5°·4989. (d) (921)	
h m s	° ′ ″	h m s	h m s	° ′ ″	h m s
23 29 28	235 35·2 34·5	23 31 24·3	23 33 39	235 46·0 44·7	23 35 26·3
30 33	30·0 29·2	° ′ ″	34 29	44·0 42·5	° ′ ″
31 30	45·5 44·7	235 38 32	35 18	27·2 26·8	235 36 30
32 42	45·0 44·2		36 5	30·5 29·8	
	Rotated prism 90°.		36 58	28·0 27·0	
	Standard Stars. (922)			Standard Stars. (923)	
	° ′ ″ ″ ′ ″	h m s		Scale r	h m s
23 40 44	277 46 6 2 4 55	23 47 14·3	23 45 19	19 380 5·560	23 47 33·1
43 9	6 4 4 50	° ′ ″	46 24	·582	″
50 54	47 7 44 6 33	277 45 56	47 50	180 220 2·593	6449·947
52 46	7 21 6 6		49 1	·723	
			49 30	·659	

	B	t	T
h m	in.	°	°
At 22 54	30·13	58·2	53·2
23 54	30·11	56·0	54·0

Run + 0ʳ·018.
Correction for coincidence of Microscopes of Position Circle — 15″·5.
Chronometer Correction + 21ˢ·0.
During 914–917 I. 3 (sometimes 2–3), towards end planet rather faint.
„ 918–921 I. 3. Planet faint because of great Z. Distance.
„ 922–923 I. 3–4; rather faint.

Chronometer Time.	Readings of Scale or Position Circle.	Cape Sid. Time. — Distance or P. Angle.	Chronometer Time.	Readings of Scale or Position Circle.	Cape Sid. Time. — Distance or P. Angle.
1889, August 26. GILL.					
	Victoria and — 5°·4989. (d) (924)			Victoria and — 5°·4989. (d) (925)	
h m s	Scale r	h m s	h m s	Scale r	h m s
17 4 47	109 290 5·362	17 7 8·4	17 9 16	90 310 2·818	17 11 43·9
6 19	·323	″	10 33	·896	″
7 34	90 310 2·745	768·752	12 23	109 290 5·297	769·709
8 29	·735		13 19	·242	
	Rotated prism 90°.				
	Victoria and — 5°·4989. (d) (926)			Victoria and — 5°·4989. (d) (927)	
17 26 46	109 290 5·015	h m s	17 32 54	90 310 3·180	h m s
27 56	4·976	17 29 26·1	33 46	·164	17 35 31·1
30 26	90 310 3·160	″	35 32	109 290 4·830	″
31 12	·140	772·565	38 28	·817	773·541
	Rotated prism 90°.				

Digitized by Google

Chronometer Time.	Readings of Scale or Position Circle.	Cape Sid. Time. — Distance or P. Angle.	Chronometer Time.	Readings of Scale or Position Circle.	Cape Sid. Time. — Distance or P. Angle.
1889, August 26. GILL—*continued.*					
	Victoria and — 5°·4989. (d) (928)				
h m s	° ′ ″	h m s			
17 40 33	193 3·5 2·5	17 51 8·1		Stopped by rain.	
44 54	2·0 1·5	° ′ ″			
57 44	192 39·5 39·0	192 51 19			
59 57	41·5 41·0				
Run + 0ᵐ·019. Chronometer Correction + 21ˢ·1. I. 3, and S. 2–3 generally. Much delay by cloud, finally rain stopped the observations.				B t T h m in ° ° At 17 2 29·97 53·2 51·2 18 5 30·02 53·0 48·2	
1889, August 26. AUWERS.					
	Victoria and — 5°·4989. (d) (929)			Victoria and — 5°·4989. (d) (930)	
h m s	Scale r	h m s	h m s	Scale r	h m s
21 35 29	110 290 4·950	21 38 31·0	21 44 45	89 310 3·358	21 46 34·9
36 56	·862	″	45 32	·286	″
38 0 }	89 310 3·158 }	813·554	46 51	110 290 4·741	814·948
39 2 }	·271 } ft. ½ p.		47 46	·683	
43 49 }	·288 }				
	Rotated prism 90°.				
	Victoria and — 5°·4989. (d) (931)			Victoria and — 5°·4989. (d) (932)	
21 48 48	110 290 4·667	h m s	21 53 57	89 310 3·408	h m s
49 51	·598	21 51 3·4	54 42	·450	21 55 51·7
51 34	89 310 3·399	″	56 11	110 290 4·588	″
52 35	·389	815·711	57 11	·581	816·128
	Rotated prism 90°.				
	Victoria and — 5°·4989. (d) (933)			Victoria and — 5°·4989. (d) (934)	
	° ′ ″			° ′ ″	
21 58 56	190 47·0 46·2	h m s	22 8 1	190 36·0 35·0	h m s
59 57	48·0 47·5	22 0 46·2	8 50	35·5 34·7	22 9 44·7
22 0 55	36·5 35·7	° ′ ″	9 58	38·0 36·5	° ′ ″
1 51	34·5 33·2	190 41 4	10 44	39·5 38·7	190 36 44
	Rotated prism 90°.				
	Victoria and — 5°·4989. (d) (935)			Victoria and — 5°·4989. (d) (936)	
22 11 42	190 36·0 35·0	h m s	22 14 32	190 34·0 33·0	h m s
12 28	39·5 38·5	22 13 7·4	15 27	31·5 30·5	22 16 17·9
13 8	33·0 32·0	° ′ ″	16 24	37·5 36·7	′ ″
13 46	30·0 29·5	190 34 11	17 23	36·5 35·7	190 34 25
	Rotated prism 90°.				

Digitized by Google

Chronometer Time.	Readings of Scale or Position Circle.	Cape Sid. Time. — Distance or P. Angle.	Chronometer Time.	Readings of Scale or Position Circle.	Cape Sid. Time. — Distance or P. Angle.
1889, August 26. AUWERS—*continued.*					
	Standard Stars. (937)			Standard Stars. (938)	
h m s	° ′ ″ ′ ″	h m s	h m s	Scale r	h m s
22 22 30	97 47 7 48 6 58	22 27 51·7	22 26 11	180 220 2·250	22 28 20·4
24 17	8 17 7 20	° ′ ″	27 21	·220	″
31 6	8 10 7 11	97 47 19	28 37	19 380 5·813	6453·165
32 8	7 44 6 48		29 47	·795	
	Victoria and — 5°·4989. (d) (939)			Victoria and — 5°·4989. (d) (940)	
	°	h m s		° ′ ′	h m s
22 50 25	10 13·0 11·5	22 53 19·4	22 56 19	10 13·0 11·5	22 57 50·2
51 45	12·0 10·8	° ′ ″	57 4	13·0 11·3	° ′ ″
54 25	15·7 14·7	190 13 22	57 55	10·7 10·0	190 11 11
55 17	15·0 14·2		58 37	10·3 9·7	
	Rotated prism 90°.				
	Victoria and — 5°·4989. (d) (941)			Victoria and — 5°·4989. (d) (942)	
23 0 10 }	10 8·5 7·0	h m s	23 3 24	10 11·5 10·2	h m s
0 53 }	7·5 6·5	23 2 2·3	4 7	10·5 10·0	23 5 43·2
1 44 } }	10·7 10·0 } }	° ′ ″	6 40	5·5 4·7	° ′ ″
2 35 } } *	5·0 4·5 } }	190 7 46	7 16	3·8 3·2	190 7 25
5 18 } *	7·5 6·7 }				
	Rotated prism 90°. *(*See* Foot note.)				
	Victoria and — 5°·4989. (d) (943)			Victoria and — 5°·4989. (d) (944)	
	Scale r	h m s		Scale r	
23 8 30	89 310 4·720	23 10 12·4	23 12 1 }	110 290 3·366 }	
9 20	·740	″	13 3 }	·345 }	h m s
10 24	110 290 3·360	828·865	13 57 }	89 310 4·690 }	23 14 26·1
11 10	·350		15 18 }	·682 }	″
	Rotated prism 90°.		16 7 }	·850 }	829·073
			17 7 }	·866 }	

	h m	B in.	t °	T °
At	21 21	30·08	51·6	49·8
	23 19	30·06	50·8	48·5

Run + 0ʳ·017.
Correction for coincidence of Microscopes of Position Circle + 13″.
Chronometer Correction + 21ˢ·4.
During 929–932 I. 2–3.
Heavy rain squall at 22ʰ 33ᵐ.
„ 937–938 I. 3; S. 3.
„ 939–944 I. 2–3, very clear after rain.

Note.—At 23ʰ 3ᵐ 34ˢ the observer noted a marked increase in the Position Circle reading, and accordingly after the pointing at 23ʰ 4ᵐ 7ˢ he re-reversed the prism and repeated the pointing he had formerly made at 23ʰ 2ᵐ 35ˢ by another at 23ʰ 5ᵐ 18ˢ. After this the prism was again reversed and the two remaining pointings of 942 were made.

Digitized by Google

YALE

OBSERVATIONS OF VICTORIA

IN

1889.

A 12363.

Digitized by Google

YALE HELIOMETER OBSERVATIONS OF VICTORIA, 1889.

OBSERVERS: ELKIN AND HALL.

1889, June 17. Obs. HALL, T. W.

Star.	Chronometer.	Micrometer.	Means.
°	h m s	r	h m s
— 9·5382 (μ)	17 11 52	+ 0·632	17 14 54
	13 52	+ 0·618	
(1)	16 21	— 0·860	451·689
	17 31	— 1·012	
— 6·5360 (θ)	17 30 11	— 1·509	17 32 15
	31 18	— 1·478	
(2)	33 5	+ 1·209	312·687
	34 27	+ 1·152	
— 6·5360 (θ)	17 40 19	+ 1·081	17 42 28
	41 47	+ 1·096	
(3)	43 17	— 0·699	312·361
	44 30	— 0·755	
— 9·5382 (μ)	17 52 9	— 1·480	17 55 52
	54 10	— 1·313	
(4)	58 7	+ 1·480	453·086
	59 2	+ 1·485	
— 9·5382 (μ)	18 6 34	+ 0·718	18 8 54
	8 5	+ 0·685	
(5)	9 58	— 1·061	453·644
	10 58	— 1·053	
— 6·5360 (θ)	18 17 37	— 1·172	18 20 18
	19 39	— 1·218	
(6)	21 22	+ 1·431	311·243
	22 33	+ 1·446	
— 6·5360 (θ)	18 30 24	+ 1·349	18 32 4
	31 23	+ 1·258	
(7)	32 49	— 1·474	310·853
	33 41	— 1·426	
— 9·5382 (μ)	18 39 58	— 1·511	18 41 59
	40 44	— 1·552	
(8)	43 14	+ 1·269	454·741
	44 1	+ 1·277	

At Beginning, Thermometer 64°·5.
„ End „ 62°·0. Barometer 760·0 mm.
Chronometer Correction, — 1m. 35s. I. 3. S. 3.

1889. June 18. Obs. ELKIN, T. W.

Star.	Chronometer.	Micrometer.	Means.
°	h m s	r	h m s
— 9·5382 (μ)	17 24 54	+ 0·840	17 26 19
	25 38	+ 1·011	
(9)	26 50	— 0·660	498·212
	27 54	— 0·766	
— 6·5360 (θ)	17 30 58	— 0·676	17 32 36
	31 56	— 0·809	
(10)	33 28	+ 0·814	268·108
	34 1	+ 0·888	
— 6·5360 (θ)	17 36 58	+ 0·799	17 37 57
	37 37	+ 0·813	
(11)	38 20	— 0·908	267·935
	38 52	— 0·833	
— 9·5382 (μ)	17 40 56	— 1·409	17 42 51
	42 24	— 1·375	
(12)	43 31	+ 1·307	498·890
	44 32	+ 1·257	
— 9·5382 (μ)	17 45 48	+ 1·210	17 46 56
	46 20	+ 1·381	
(13)	47 23	— 1·193	499·056
	48 13	— 1·286	
— 6·5360 (θ)	17 50 23	— 1·022	17 51 26
	50 54	— 1·080	
(14)	51 59	+ 1·550	267·522
	52 28	+ 1·596	
— 6·5360 (θ)	17 54 41	+ 1·559	17 56 18
	55 18	+ 1·500	
(15)	57 14	— 1·212	267·362
	57 58	— 1·123	
— 9·5382 (μ)	18 1 11	— 1·116	18 2 20
	1 42	— 1·027	
(16)	2 58	+ 0·666	499·531
	3 28	+ 1·539	

At Beginning, Thermometer 54°·0.
„ End „ 52°·5. Barometer 762·0 mm.
Chronometer Correction, — 1m. 36s. I. 2-3. S. 3.

Digitized by Google

1889, June 20. Obs. ELKIN, T. W.

Star.	Chronometer.	Micrometer.	Means.
	h m s	′ ″ ′ ″	h m s
Standards	17 17 39	+ 1·183	17 19 58
(17s)	18 55	0 33 8 14	508·840
		8 34 4 44	
	20 59	9 26 8 0	17 19 57
(18p)		7 23 4 28	° ′ ″ 7 12 40
	22 18	— 1·343	
	°	° ′ ″	
— 7·5183 (λ)	17 26 55	— 1·466	17 29 51
	28 1	5 6 6	
(19s)	28 41	— 1·428	102·744
	29 28	4 59 59	
	30 15	5 9 9	17 29 58
	30 56	+ 1·150	
(20p)	32 7	5 9 9	5 5 56
	32 50	+ 1·232	
— 7·5183 (λ)	17 34 27	+ 1·286	17 37 26
	35 2	185 6 6	
(21s)	35 56	+ 1·254	102·915
	36 51	185 16 16	
	37 36	185 24 25	
	38 43	— 1·340	17 37 20
(22p)	39 52	185 10 10	
	40 37	— 1·369	185 14 7
— 7·5183 (λ)	17 41 32	— 1·370	17 44 30
	42 49	185 22 22	
(23s)	43 30	— 1·275	103·080
	43 59	185 18 17	
	45 7	185 19 18	17 44 37
	45 45	+ 1·338	
(24p)	46 34	185 22 21	185 19 56
	47 13	+ 1·467	
— 7·5183 (λ)	17 49 34	+ 1·413	17 52 30
	50 30	5 23 24	
(25s)	51 9	+ 1·440	103·286
	52 4	5 30 31	
	53 1	5 30 31	17 52 33
(26p)	53 50	— 1·144	
	54 39	5 22 22	5 26 37
	55 27	— 1·136	
		′ ″ ′ ″	
Standards	18 0 6	— 1·320	18 2 12
(27s)	0 54	9 9 7 28	508·976
		6 17 4 28	
	2 33	8 31 7 27	18 1 43
(28p)		5 46 4 31	187 11 29
	4 18	+ 1·296	

At Beginning, Thermometer 62°·5.
" End " 61·5. Barometer 761·0 mm.
Chronometer Correction, — 1m. 33s. I. 3. S 3.

1889, June 20. Obs. HALL, T. W.

Star.	Chronometer.	Micrometer.	Means.
	h m s	′ ″ ′ ″	h m s
Standards	18 35 27	— 1·297	18 40 9
(30s)	36 54	8 50 8 29	509·143
		4 18 3 43	
	41 23	1 19 8 52	18 39 8
(31p)		6 42 4 7	° ′ ″ 187 11 32
	44 51	+ 1·440	
	°	° ′ ″	
— 7·5183 (λ)	19 1 48	6 29 29	19 8 38
(32s)	3 6	6 32 32	
	4 27	+ 1·287	104·993
	6 56	6 36 36	19 9 2
(33p)	8 43	6 33 33	6 31 19
	10 11	+ 1·441	
	12 50	— 1·294	19 14 9
(34s)	14 29	6 33 34	105·177
	16 46	6 30 30	
	18 8	— 1·264	19 14 10
(35p)	19 46	6 37 37	6 34 15
	21 17	6 30 30	
— 7·5183 (λ)	19 24 58	186 35 35	19 31 25
(36s)	26 39	186 43 42	105·616
	28 28	— 1·068	
	29 37	186 40 38	19 31 30
(37p)	31 32	186 48 47	6 52 19
	32 46	— 1·064	
	34 23	+ 0·684	19 36 12
(38s)	36 1	187 6 4	105·688
	38 21	187 7 6	
	39 39	+ 0·752	19 36 11
(39p)	40 51	187 3 2	6 54 49
	42 45	187 10 9	
— 7·5183 (λ)	19 45 59	7 7 8	19 51 43
(40s)	47 26	7 6 6	106·085
	48 18	+ 0·898	
	49 59	7 7 8	19 52 0
(41p)	51 21	7 6 7	7 5 22
	53 27	+ 0·891	
	55 7	— 0·813	19 56 37
(42s)	56 5	7 3 3	106·133
	58 25	7 4 5	
	59 47	— 0·758	19 56 20
(43p)	20 1 19	7 9 9	7 7 41
	2 40	7 7 7	

Digitized by Google

1889, June 20. Obs. HALL, T. W.—*continued.*

Star.	Chronometer.	Micrometer.	Means.
	h m s	′ ″ ′ ″	h m s
Standards	20 6 15	+ 1·428	20 10 39
(44s)	7 59	5 26 4 8	r 509·088
		2 20 0 37	
	11 55	4 28 3 44	20 9 57
(45p)		1 30 0 33	7 11 11
	15 3	— 1·340	

At Beginning, Thermometer 61°·0.
„ End „ 60·0. Barometer 760·5 mm.
Chronometer Correction, — 1m. 32s. I. 3. S. 3.

1889, June 22. Obs. ELKIN, T.W.

Star.	Chronometer.	Micrometer.	Means.
°	h m s	° ′ ′	h m s
— 7·5183 (λ)	17 22 26	— 0·784	17 25 14
(46s)	23 18	209 12 12	
	23 55	— 0·707	180·198
	24 49	209 10 9	
	25 50	209 9 8	17 25 19
(47p)	26 32	+ 0·853	
	27 18	209 14 13	209 11 0
	28 2	+ 1·033	
— 6·5360 (θ)	17 31 32	+ 0·757	17 34 14
(48s)	32 21	205 26 26	
	33 14	+ 0·740	87·730
	33 54	205 16 16	
	34 40	205 20 20	17 34 16
(49p)	35 26	— 1·019	
	36 8	205 23 23	205 21 22
	36 44	— 1·017	
— 6·5360 (θ)	17 38 21	— 1·022	17 41 6
(50s)	39 33	25 17 18	
	40 6	— 1·086	87·522
	40 55	25 20 21	
	41 36	25 19 19	
(51p)	42 8	+ 0·638	17 41 17
	43 5	25 14 15	
	43 40	+ 0·514	25 18 0
— 7·5183 (λ)	17 45 37	+ 1·338	17 48 15
(52s)	46 19	29 14 15	
	46 45	+ 1·240	181·024
	47 33	29 19 20	
	48 49	29 20 20	17 48 14
(53p)	49 33	— 1·229	
	50 17	29 17 17	29 17 56
	51 7	— 1·301	

1889, June 22. Obs. ELKIN, T. W.—*continued.*

Star.	Chronometer.	Micrometer.	Means.
°	h m s	° ′ ′	h m s
— 7·5183 (λ)	17 53 19	— 1·252	17 55 12
(54s)	53 53	29 20 21	r 181·251
	54 34	1·142	
	55 41	1·516	17 55 10
	56 28	29 15 16	29 18 7
(55p)	57 3	+ 1·380	
— 6·5360 (θ)	18 0 1	+ 1·314	18 2 10
(56s)	0 23	25 2 3	
	1 9	+ 1·271	86·829
	1 56	25 3 2	
	2 32	25 4 6	18 2 10
(57p)	2 58	— 1·404	
	3 49	25 1 3	25 3 15
	4 34	— 1·522	
— 6·5360 (θ)	18 5 48	— 1·385	18 8 27
	6 18	205 12 12	
(58s)	7 26	— 1·405	86·746
	8 7	205 0 0	
	8 54	205 54 53	18 8 26
(59p)	9 39	+ 1·110	
	10 25	205 0 1	205 1 30
	10 55	+ 1·173	
— 7·5183 (λ)	18 12 20	+ 0·681	18 14 38
(60s)	13 6	209 20 21	
	13 44	+ 0·795	181·872
	14 18	209 19 19	
	14 58	209 21 22	18 14 34
(61p)	15 25	— 0·890	
	15 56	209 26 27	209 22 11
	17 3	— 0·842	

At Beginning, Thermometer 57°·0.
„ End „ 55·5. Barometer 762·0 mm.
Chronometer Correction, — 1m. 34s. I. 2-3. S. 3.

1889, June 22. Obs. HALL, T. W.

Star.	Chronometer.	Micrometer.	Means.
°	h m s	° ′ ′	h m s
— 7·5183 (λ)	18 25 35	— 1·212	18 31 45
(62s)	27 17	29 21 21	
	28 57	— 1·122	r 182·588
	30 11	29 22 22	
	32 48	29 31 31	18 31 41
(63p)	34 26	+ 0·731	
	36 30	29 32 32	29 26 37
	38 1	+ 0·779	

Digitized by Google

1889, June 22. Obs. HALL, T. W.—*continued.*

Star.	Chronometer.	Micrometer.	Means.
	h m s	° ′ ″	h m s
	18 44 27	+ 1·157	18 49 45
− 6·5360 (θ)	46 11	24 39 39	r
(64s)	47 34	+ 1·220	85·379
	48 54	24 38 38	
	51 10	24 33 33	18 49 59
	52 29	− 0·753	
(65p)	53 40	24 30 30	24 35 7
	54 31	− 0·866	
	18 57 34	− 0·800	19 3 3
− 6·5360 (θ)	59 25	204 26 26	
(66s)	19 0 25	− 0·851	85·085
	1 34	204 26 26	
	3 23	204 43 42	19 2 48
	4 30	+ 0·974	
(67p)	6 49	204 35 34	204 32 19
	9 53	+ 0·848	
	19 16 49	+ 1·493	19 21 48
− 7·5183 (λ)	18 50	209 39 38	
(68s)	20 21	+ 1·500	184·287
	21 11	209 40 40	
	23 3	209 33 32	19 22 5
	23 46	− 1·207	
(69p)	25 18	209 32 32	209 35 52
	26 17	− 1·212	

At Beginning, Thermometer 55°·5.
„ End „ 55°·0. Barometer 762·0 mm.
Chronometer Correction, — 1m. 34s. I.— S. —

1889, June 23. Obs. ELKIN, T. W.

Star.	Chronometer.	Micrometer.	Means.
	h m s	′ ″ ′ ″	h m s
Standards	18 19 57	− 1·366	18 22 4
(70s)	20 39	2 9 8 59	r
		7 39 4 20	508·973
	22 57	1 29 8 57	18 21 48
(71p)		6 49 4 15	187 12 54
	24 11	+ 1·339	
		° ′ ″	
− 6·5360 (θ)	18 36 19	+ 1·324	18 38 16
(72s)	37 4	357 22 23	46·872
	37 55	357 10 11	
	38 55	357 21 22	18 38 24
(73p)	39 41	357 4 6	357 14 52
	40 14	− 1·452	

1889, June 23. Obs. ELKIN, T. W.—*continued.*

Star.	Chronometer.	Micrometer.	Means.
	h m s	° ′ ″	h m s
− 6·5360 (θ)	18 41 50	− 1·428	18 43 46
	42 49	177 16 15	r
(74s)	43 18	177 7 6	46·832
	44 30	176 56 56	18 43 58
(75p)	45 15	177 4 4	177 5 30
	45 43	+ 1·260	
	18 46 30	+ 1·245	18 48 18
− 6·5360 (θ)	47 33	176 52 51	46·707
(76s)	48 21	176 51 50	
	49 1	176 59 59	18 48 36
(77p)	49 31	176 57 56	176 54 33
	50 7	− 1·538	
	18 51 18	− 1·533	18 53 3
− 6·5360 (θ)	52 9	356 57 57	46·547
(78s)	52 37	356 56 56	
	53 20	356 43 44	18 53 5
(79p)	54 4	356 37 38	356 48 37
	54 49	+ 1·080	
	18 55 29	+ 1·070	18 57 5
− 6·5360 (θ)	55 59	356 48 48	46·432
(80s)	56 41	356 46 46	
	57 29	356 47 47	18 57 2
(81p)	58 1	356 30 31	356 42 52
	58 42	− 1·638	
	18 59 50	− 0·650	19 1 31
− 6·5360 (θ)	19 0 32	176 40 40	46·407
(82s)	0 57	176 30 30	
	1 37	176 24 24	19 1 24
(83p)	2 32	176 29 29	176 30 52
	3 13	+ 1·057	
	19 3 53	+ 1·027	19 5 11
− 6·5360 (θ)	4 25	176 20 20	46·334
(84s)	4 52	176 22 22	
	5 27	176 30 30	19 5 11
(85p)	6 0	176 25 24	176 24 11
	6 30	− 0·693	
	19 7 20	− 0·650	19 8 53
− 6·5360 (θ)	8 7	356 8 8	46·301
(86s)	8 50	356 15 16	
	9 24	356 8 9	19 9 3
(87p)	9 52	356 10 10	356 10 37
	10 26	+ 0·951	

Digitized by Google

1889, June 23. Obs. ELKIN, T. W.—*continued.*

Star.	Chronometer.	Micrometer.	Means.
	h m s	′ ″ ′ ″	h m s
Standards	19 15 30	+ 1·359	19 17 50
(88s)	16 6	0 15 8 8	r 509·061
		7 35 4 14	
	18 20	0 5 8 28	19 17 13
(89p)		7 16 4 14	7 12 31
	20 10	— 1·298	

At Beginning, Thermometer 57°.
„ End „ 57. Barometer 770·5 mm.
Chronometer Correction, — 1m. 33s. I. 2-3. S. 3.

1889, June 23. Obs. HALL, T. E.

Star.	Chronometer.	Micrometer.	Means.
	h m s	′ ″ ′ ″	h m s
Standards	20 46 54	— 1·247	20 50 38
(90s)	47 31	8 32 9 40	r 509·194
		4 48 4 2	
	51 3	9 21 9 31	20 49 17
(91p)		5 35 4 13	7 10 12
	54 22	+ 1·441	
°		° ′ ′	
— 6·5360 (θ)	21 2 52	352 18 18	21 9 55
(92s)	4 6	352 18 18	43·583
	5 34	+ 0·702	
	7 28	352 3 5	21 9 38
(93p)	9 1	351 48 49	351 47 56
	10 24	+ 0·722	
	14 17	— 1·119	21 14 9
(94s)	15 17	351 18 19	43·593
	16 23	351 16 17	
	17 55	— 1·129	21 13 56
(95p)	19 1	351 18 19	351 34 45
	20 14	351 7 7	
— 6·5360 (θ)	21 24 25	171 11 11	21 29 55
(96s)	25 43	170 57 57	43·207
	27 5	— 1·262	
	28 17	170 56 56	21 29 36
(97p)	29 30	170 38 37	170 58 15
	31 17	— 1·272	
	32 45	— 1·469	21 33 43
(98s)	33 27	170 56 56	43·151
	34 50	170 48 48	
	36 10	— 1·423	21 33 35
(99p)	37 49	170 45 45	170 47 7
	38 46	170 50 50	

At Beginning, Thermometer —
„ End „ 51·5. Barometer 766·0 mm.
Chronometer Correction, — 1m. 30s. I. 3-2. S. 3-2.

1889, June 26. Obs. ELKIN, T. W.

Star.	Chronometer.	Micrometer.	Means.
°	h m s		h m s
— 5·5138 (ε)	17 50 13	+ 1·013	18 0 45
	18 3 8	+ 0·700	r 379·984
(100)	4 28	— 0·910	
	5 12	— 0·835	
— 7·5183 (λ)	18 8 12	— 0·910	18 9 38
	9 12	— 0·832	
(101)	10 5	+ 0·837	377·873
	11 5	+ 0·651	
— 7·5183 (λ)	18 12 58	+ 0·768	18 14 0
	13 35	+ 0·859	
(102)	14 26	— 0·752	378·055
	15 2	— 0·764	
	18 17 1	— 1·080	18 18 4
— 5·5138 (ε)	17 37	— 1·123	
	18 32	+ 1·447	379·374
(103)	19 5	+ 1·505	
— 5·5138 (ε)	18 20 18	+ 1·463	18 21 26
	20 58	+ 1·438	
(104)	21 59	— 1·280	379·215
	22 30	— 1·191	
— 7·5183 (λ)	18 24 57	— 0·672	18 25 54
	25 29	— 0·540	
(105)	26 16	+ 1·112	378·491
	26 53	+ 1·083	
— 7·5183 (λ)	18 28 29	+ 1·111	18 32 55
	29 18	+ 1·124	
(106)	35 50	— 1·350	378·757
	38 5	— 1·370	
— 5·5138 (ε)	18 41 17	— 1·460	18 42 22
	41 58	— 1·531	
(107)	42 49	+ 1·089	378·638
	43 22	+ 1·178	
— 5·5138 (ε)	18 47 32	+ 1·068	18 48 32
	48 3	+ 1·079	
(108)	48 59	— 0·690	378·473
	49 33	— 0·511	
— 7·5183 (λ)	18 51 27	— 1·073	18 52 33
	51 55	— 0·991	
(109)	53 13	+ 0·707	379·602
	53 35	+ 0·562	

Digitized by Google

1889, June 26. Obs. ELKIN, T. W.—*continued.*

Star.	Chronometer.	Micrometer.	Means.
°	h m s		h m s
− 7·5183 (λ)	18 54 51	+ 0·745	18 55 55
	55 34	+ 0·720	
(110)	56 22	− 0·960	r 379·705
	56 53	− 0·095	
	Stopped by fog.		

At Beginning, Thermometer 68°·0.
„ End „ 66·5. Barometer 766·0 mm.
Chronometer Correction, − 1m. 32s. I. 3. S. 3, faint.

1889, June 27. Obs. ELKIN, T. W.

Star.	Chronometer.	Micrometer.	Means.
°	h m s		h m s
− 5·5138 (ε)	17 14 36	− 0·684	17 16 19
	16 0	− 0·740	
(111)	17 0	+ 0·810	r 334·117
	17 39	+ 0·848	
− 7·5183 (λ)	17 20 8	+ 0·778	17 21 28
	20 43	+ 0·888	
(112)	21 36	− 0·659	428·069
	23 5	− 0·869	
− 7·5183 (λ)	17 24 29	− 0·738	17 25 34
	25 9	− 0·632	
(113)	26 0	+ 0·978	428·228
	26 38	+ 0·848	
− 5·5138 (ε)	17 29 8	+ 0·729	17 30 11
	29 42	+ 0·754	
(114)	30 39	− 0·980	333·781
	31 14	− 0·941	
− 5·5138 (ε)	17 32 8	− 0·938	17 33 23
	32 58	− 0·989	
(115)	33 58	+ 0·611	333·682
	34 29	+ 0·680	
− 7·5183 (λ)	17 36 32	+ 1·060	17 37 44
	37 18	+ 1·207	
(116)	38 10	− 1·430	428·679
	38 57	− 1·478	
− 7·5183 (λ)	17 40 18	− 1·437	17 41 38
	41 3	− 1·352	
(117)	42 18	+ 1·352	428·928
	42 55	+ 1·293	

1889, June 27. Obs. ELKIN, T. W.—*continued.*

Star.	Chronometer.	Micrometer.	Means
°	h m s		h m s
− 5·5138 (ε)	17 45 16	− 1·520	17 46 20
	45 59	− 1·418	
(118)	46 45	+ 1·234	r 333·272
	47 24	+ 1·160	

At Beginning, Thermometer 67°·0.
„ End „ 66·5. Barometer 767·5 mm.
Chronometer Correction, — 1m. 30s. I. — S. —.

1889, June 29. Obs. ELKIN, T. W.

Star.	Chronometer.	Micrometer.	Means.
°	h m s		h m s
− 4·4992 (γ)	17 39 36	− 1·125	17 41 13
	40 32	− 1·043	
(119)	41 55	+ 0·617	r 457·488
	42 48	+ 0·527	
− 7·5183 (λ)	17 46 5	+ 0·780	17 47 27
	46 43	+ 0·757	
(120)	47 53	− 0·905	535·929
	49 6	− 0·774	
− 7·5183 (λ)	17 50 31	− 0·782	17 52 8
	51 40	− 0·806	
(121)	52 45	+ 0·889	536·129
	53 28	+ 0·958	
− 4·4992 (γ)	17 55 47	+ 1·360	17 56 50
	56 27	+ 1·337	
(122)	57 15	− 1·298	457·035
	57 50	− 1·328	
− 4·4992 (γ)	17 59 57	− 1·370	18 1 7
	18 0 39	− 1·294	
(123)	1 42	+ 1·337	456·980
	2 12	+ 1·288	
− 7·5183 (λ)	18 5 59	+ 1·226	18 7 23
	6 54	+ 1·180	
(124)	8 1	− 1·436	536·780
	8 38	− 1·410	
− 7·5183 (λ)	18 10 31	− 1·430	18 11 35
	11 3	− 1·325	
(125)	12 12	+ 1·317	536·952
	12 35	+ 1·342	

Digitized by Google

1889, June 29. Obs. ELKIN, T. W.—*continued.*

Star.	Chronometer.	Micrometer.	Means.
°	h m s		h m s
— 4·4992 (γ)	18 14 58	+ 1·090	18 15 59
	15 33	+ 1·120	
(126)	16 25	— 0·553	r 456·490
	16 58	— 0·676	

At Beginning, Thermometer 68°·5.
„ End „ — Barometer 766·5 mm.
Chronometer Correction, — 1m. 29s. I. —. S. —.

1889, June 29. Obs. ELKIN, T. W.—*continued.*

Star.	Chronometer.	Micrometer.	Means.
°	h m s		h m s
— 5·5144 (η)	19 27 11	+ 1·242	19 28 7
	27 41	+ 1·162	
(134)	28 34	— 1·402	r 345·213
	29 3	— 1·428	

At Beginning, Thermometer °
„ End „ 66·5. Barometer 766·5 mm.
Chronometer Correction, — 1m. 29s. I. 2-3. S. 3.

1889, June 29. Obs. ELKIN, T. W.

Star.	Chronometer.	Micrometer.	Means.
°	h m s		h m s
— 5·5144 (η)	18 42 36	— 0·831	18 43 43
	43 20	— 0·827	
(127)	44 6	+ 0·780	r 345·943
	44 51	+ 0·764	
— 8·5205 (ζ)	18 47 52	+ 0·608	18 49 12
	48 46	+ 0·550	
(128)	49 46	— 1·034	525·575
	50 25	— 0·974	
— 8·5205 (ζ)	18 52 18	— 0·978	18 53 28
	52 59	— 0·980	
(129)	54 1	+ 0·605	525·677
	54 33	+ 0·708	
— 5·5144 (η)	18 57 5	+ 0·711	18 58 8
	57 51	+ 0·762	
(130)	58 35	— 0·940	345·795
	59 0	— 0·942	
— 5·5144 (η)	19 9 42	— 1·087	19 10 39
	10 14	— 0·992	
(131)	11 1	+ 0·620	345·522
	11 39	+ 0·503	
— 8·5205 (ζ)	19 13 48	+ 1·000	19 14 57
	14 31	+ 0·880	
(132)	15 23	— 0·650	526·265
	16 8	— 0·700	
— 8·5205 (ζ)	19 18 57	— 1·010	19 20 57
	20 38	— 0·899	
(133)	21 26	+ 0·610	526·340
	22 51	+ 0·620	

1889, July 4. Obs. ELKIN, T. W.

Star.	Chronometer.	Micrometer.	Means.
°	h m s		h m s
— 4·4984 (β)	18 0 17	— 1·013	18 1 27
	0 59	— 0·938	
(135)	1 51	+ 0·631	r 285·664
	2 41	+ 0·649	
— 6·5339 (δ)	18 6 25	+ 0·850	18 7 23
	6 56	+ 0·815	
(136)	7 50	— 0·743	334·100
	8 22	— 0·721	
— 6·5339 (δ)	18 10 9	— 0·804	18 11 2
	10 39	— 0·756	
(137)	11 27	+ 0·882	334·130
	11 54	+ 0·938	
— 4·4984 (β)	18 13 56	+ 0·504	18 15 22
	14 38	+ 0·500	
(138)	15 58	— 1·186	285·319
	16 58	— 1·180	
— 4·4984 (β)	18 18 39	— 1·254	18 19 44
	19 20	— 1·204	
(139)	20 11	+ 1·483	285·249
	20 47	+ 1·477	
— 6·5339 (δ)	18 23 59	+ 1·090	18 25 0
	24 31	+ 1·149	
(140)	25 32	— 1·489	334·675
	25 59	— 1·400	
— 6·5339 (δ)	18 28 2	— 1·494	18 28 56
	28 32	— 1·445	
(141)	29 23	+ 1·149	334·692
	29 47	+ 1·174	

Digitized by Google

1889, July 4. Obs. ELKIN, T. W.—*continued.*

Star.	Chronometer.	Micrometer.	Means.
°	h m s	.	h m s
− 4·4984 (β)	18 31 56	+ 1·312	18 33 6
	32 25	+ 1·248	
(142)	33 47	− 1·402	r 284·899
	34 17	− 1·360	
− 4·4984 (β)	18 35 42	− 1·410	18 36 49
	36 19	− 1·456	
(143)	37 17	+ 1·114	284·745
	38 0	+ 1·243	
− 6·5339 (δ)	18 39 47	+ 1·363	18 40 32
	40 10	+ 1·360	
(144)	40 51	− 1·268	335·126
	41 18	− 1·202	
− 6·5339 (δ)	18 42 46	− 1·209	18 43 39
	43 11	− 1·168	
(145)	44 3	+ 1·450	335·254
	44 35	+ 1·436	
− 4·4984 (β)	18 46 43	+ 1·113	18 47 44
	47 9	+ 1·100	
(146)	48 5	− 0·597	284·540
	48 58	− 0·536	

At Beginning, Thermometer 60°·5.
„ End „ 59·5. Barometer 761·5 mm.
Chronometer Correction, — 1m. 27s. I. 3. S. 3.

1889, July 5. Obs. HALL, T. E.

Star.	Chronometer.	Micrometer.	Means.
°	h m s	° ′ ″	h m s
− 5·5124 (z)	19 51 10	203 8 8	19 56 52
	52 26	203 10·11	r 44·105
(147s)	53 50	+ 0·973	
	55 9	203 8· 9	19 57 8
(148p)	56 50	203 3 3	202 52 15
	58 3	+ 0·798	
	59 54	− 0·868	20 1 8
(149s)	20 1 43	202 37·37·	43·808
	3 15	202 32·32·	
	4 14	= 0·990	20 1 34
(150p)	6 18	202 29 29	202 49 26
	7 58	202 37 37	

1889, July 5. Obs. HALL, T. E.—*continued.*

Star.	Chronometer.	Micrometer.	Means.
°	h m s	° ′ ″	h m s
− 5·5124 (z)	20 11 18	22 30·31	20 18 13
	12.35	22 42 43	r 43·137
(151s)	13 49	− 1·174	
	17 9	22 50 51	20 18 8
(152p)	18 22	22 36 37	22 48 4
	19 27	− 1·406	
	22 37	+ 1·311	20 22 40
(153s)	23 47	23 2 3	42·763
	24 54	22 56 57	
	25 54	+ 1·169	20 22 59
(154p)	27 36	23 11·13	22 57 15
	28 50	23 9·10	
− 5·5124 (z)	20 32 43	203 10·10·	20 38 12
	34 25	203 0 0	42·263
(155s)	35 32	+ 1·021	
	36 41	202 54 54	20 38 3
	37 58	202 58 58	202 48 22
(156p)	39 19	+ 0·931	
	40 52	− 0·758	20 42 24
	41 51	202 26 26	42·121
(157s)	43 14	202 37 37	
	45 30	− 0·810	20 42 45
(158p)	47 19	202 30 30	202 44 0
	49 5	202 34 34	
		′ ″ ′ ″	
Standards.	21 4 2	− 1·273	21 7 35
(159s)	5 27	4 39 5 36	509·100
		3 40 4 36	
	8 38	7 36 5 37	21 7 2
(160p)		6 45 4 46	187 10 31
	11 8	+ 1·373	

At Beginning, Thermometer 59°·0.
„ End „ 58·0. Barometer 765·0 mm.
Chronometer Correction, — 1m. 25s. I. 3. S. 3.

1889, July 6. Obs. ELKIN, T. W.

Star.	Chronometer.	Micrometer.	Means.
	h m s	′ ″ ′ ″	h m s
Standards.	17 26 59	− 1·320	17 29 59
(161s)	28 18	7 5 4 13	r 508·984
		7 37 4 44	
	30 58	6 19 4 18	17 29 38
(162p)		6 53 4 33	187 12 30
	32 59	+ 1·304	

Digitized by Google

1889, July 6. Obs. ELKIN, T. W.—*continued.*

Star.	Chronometer.	Micrometer.	Means.
°	h m s	° ′ ″	h m s
— 5·5124 (z)	17 44 5	— 1·290	17 45 27
(163s)	44 37	— 1·284	r 9·153·
	45 7	214 50 51	
	45 46	213 4 5	17 45 26
(164p)	46 19	+ 1·460	213 57 30
	46 48	+ 1·421	
— 5·5124 (z)	17 47 48	+ 1·380	17 50 12
(165s)	48 38	33 33 34	9·284
	49 14	+ 1·394	
	50 36	— 1·138	17 49 59
(166p)	51 20	33 35 36	33 34 30
	52 49	— 1·068	
— 5·5124 (z)	17 53 35	— 1·090	17 55 11
(167s)	54 20	33 43 44	9·566
	54 46	— 0·975	
	55 32	+ 0·586	17 55 21
(168p)	56 23	33 0 1	33 22 0
	56 53	+ 0·610	
— 5·5124 (z)	17 57 43	+ 0·602	17 59 26
(169s)	58 26	213 42 42	9·706
	59 2	+ 0·698	
	59 55	— 0·978	17 59 33
(170p)	18 0 40	212 49 49	33 15 30
	1 3	— 0·910	
— 5·5124 (z)	18 2 11	— 0·907	18 3 43
(171s)	2 48	*214 10 10	9·921·
	3 15	— 0·882	
	3 56	+ 0·835	18 3 46
(172p)	4 44	212 46 46	212 58 0
	5 31	+ 0·797	
— 5·5124 (z)	18 7 15	+ 0·790	18 9 56
(173s)	9 6	33 20 21	10·197·
	10 5	+ 0·923	
	10 46	— 0·668	18 10 12
(174p)	11 18	32 21 22	32 51 0
	11 45	— 0·650	
— 5·5124 (z)	18 12 40	— 0·660	18 14 7
(175s)	13 9	33 5 6	10·409
	13 30	— 0·578	
	14 38	+ 1·028	18 14 13
(176p)	15 17	32 24 25	32 45 0
	15 39	+ 1·028	

1889, July 6. Obs. ELKIN, T. W.—*continued.*

Star.	Chronometer.	Micrometer.	Means.
°	h m s	° ′ ″	h m s
— 5·5124 (z)	18 17 40	+ 1·025	18 19 19
(177s)	18 41	212 27 27	r 10·498
	19 4	+ 1·093	
	19 46	— 0·589	18 19 33
(178p)	20 25	212 14 14	212 20 30
	20 48	— 0·533	

At Beginning, Thermometer 63°·0.
„ End „ 63·0. Barometer 767·0 mm.
Chronometer Correction, — 1m. 27s. I. —. S —.
* Correction assumed — 1°.

1889, July 6. Obs. HALL, T. W.

Star.	Chronometer.	Micrometer.	Means.
°	h m s	° ′ ″	h m s
— 5·5124 (z)	18 29 32	211 44 44	18 35 32
	31 42	— 1·242	r
(179s)	33 13	210 57 57	11·342·
	34 22	— 1·186	
	35 59	+ 0·511	18 35 27
(180p)	37 35	211 54 54	
	40 7	+ 0·602	211 33 15
	41 28	211 38 38	
— 5·5124 (z)	18 43 40	+ 0·738	18 48 29
	44 43	32 21 21·	
(181s)	46 5	+ 0·688	11·853·
	47 17	32 10 10	
	49 12	31 0 1	18 48 24
	50 56	— 0·896	
(182p)	52 26	30 0 1	31 23 4
	53 16	— 0·823	
— 5·5124 (z)	18 55 8	— 0·758	18 59 11
	56 16	210 52 52	
(183s)	57 35	— 0·746	12·298·
	58 38	210 42 42	
	59 30	211 48 48	18 58 59
	19 0 21	+ 0·980	
(184p)	1 34	211 39 39·	211 15 19
	3 40	+ 1·121	
— 5·5124 (z)	19 7 39	+ 1·165	19 11 9
	8 59	31 18 19	
(185s)	9 49	+ 1·206	12·803·
	10 35	31 44 44	
	11 39	29 42 43	19 11 15
	12 30	— 1·425	
(186p)	13 48	29 18·19	30 30 56
	14 39	— 1·339	

Digitized by Google

1889, July 6. Obs. HALL, T. W.—*continued.*

Star.	Chronometer.	Micrometer.	Means.
°	h m s	° ′ ″	h m s
− 5·5124 (z)	19 17 19	− 1·276	19 20 9
	18 7	209 38 38	r
(187s)	19 14	− 1·282	13·271
	20 58	210 22·22·	
	22 23	210 33 33	19 21 22
(188p)	23 7	+ 0·562	
	24 0	211 34 34	210 31 52
	24 56	+ 0·538	
− 5·5124 (z)	19 28 14	+ 0·653	19 32 29
	29 43	30 58 59	
(189s)	30 40	+ 0·710	13·818
	32 2	30 42·43	
	33 53	29 52 52	19 32 50
(190p)	34 32	− 0·900	
	35 41	29 33 34	30 16 41
	36 32	− 0·827	
		′ ″ ′ ″	
Standards.	19 42 28	+ 0·878	19 46 50
(191s)	43 37	9 4 6 36	
		8 2 4 13	509·138
(192p)	48 15	6 51 6 41	19 45 56
		5 45 4 30	
	51 12	− 0·740	7 11 55

At Beginning, Thermometer 63°·0.
„ End „ 61·5. Barometer 766·5 mm.
Chronometer Correction, — 1m. 25s. I. 3–2. S. 3–2.

1889, July 7. Obs. HALL, T. W.

Star.	Chronometer.	Micrometer.	Means.
	h m s	′ ″ ′ ″	h m s
Standards.	16 50 28	+ 0·790	16 54 5
(193s)	51 45	8 50 6 2	r
		7 35 4 42	508·969
	54 48	7 9 6 10	16 53 16
(194p)		5 48 4 37	
	57 42	− 0·821	187 11 57
°		° ′ ″	
− 5·5124 (z)	17 4 30	− 0·526	17 10 38
	5 46	− 0·506	66·875·
(195s)	7 4	204 42 42	
	8 49	− 1·479	17 9 57
	10 11	− 1·459	204 49 0
(196p)	11 29	204 46 46	
	12 51	204 56 56	17 15 10
(197s)	15 38	+ 1·387	67·071
	16 39	+ 1·396	
(198p)	19 3	204 54 53	17 15 16
	20 14	+ 0·498	204 49 45
	21 29	+ 0·582	

1889, July 7. Obs. HALL, T. W.—*continued.*

Star.	Chronometer.	Micrometer.	Means.
°	h m s	° ′ ″	h m s
− 5·5124 (z)	17 23 48	+ 0·532	17 29 14
	25 4	+ 0·532	67·633
(199s)	26 12	24 51·52	
	26 52	+ 0·613	17 29 18
(200p)	28 14	+ 0·613	24 43 22
	29 18	24 50 51	
	32 24	24 34 36	17 32 29
(201s)	33 16	− 0·891	67·746·
	34 50	− 0·907	
	36 5	24 28·29	17 32 41
(202p)	36 56	− 0·913	24 39 37
	37 54	− 0·820	
− 5·5124 (z)	17 41 1	− 0·830	17 45 15
	41 59	− 0·811	68·321·
(203s)	43 15	204 33 33	
	43 58	− 0·690	17 45 23
	45 13	− 0·670	204 42 7
(204p)	46 14	204 39 39	
− 5·5124 (z)	17 47 32	204 51 51·	17 48 14
	48 28	+ 1·113	68·485
(205s)	49 34	+ 1·171	
	50 38	204 46·46·	17 48 26
	51 24	+ 1·188	204 42 45
(206p)	52 20	+ 1·142	
		′ ″ ′ ″	
Standards.	18 55 14	+ 0·909	18 58 7
(207s)	55 58	9 23 6 2	509·138
		9 6 4 26	
	59 8	6 41 6 1	18 57 33
		6 22 4 30	7 12 38
(208p)	19 1 1	− 0·771	

At Beginning, Thermometer 70°·0.
„ End „ 68·0. Barometer 763·0 mm.
Chronometer Correction, — 1m. 26s. I. 2. S. 2.

1889, July 7. Obs. ELKIN, T. E.

Star.	Chronometer.	Micrometer.	Means.
	h m s	′ ″ ′ ″	h m s
Standards.	19 8 16	− 1·264	19 11 7
(209s)	9 25	6 52 7 40	r
		4 45 4 28	508·985
	12 13	7 2 7 33	19 11 49
		4 50 4 20	7 9 51
(210p)	13 59	+ 1·249	

Digitized by Google

1889, July 7. Obs. ELKIN, T. E.—*continued.*

Star.	Chronometer.	Micrometer.	Means.
°	h m s	° ′ ″	h m s
— 5·5124 (z)	19 17 9	+ 0·954	19 20 13
	17 53	24 31 32	
(211s)	19 6	24 29 30	r 72·442·
	19 51	+ 0·956	
	20 42	— 0·549	19 20 14
(212p)	21 33	24 34 36	
	22 21	24 26 27·	24 30 41
	23 8	— 0·576	
— 5·5124 (z)	19 24 31	— 1·410	19 27 28
	25 27	204 29 30	
(213s)	26 9	— 1·499	72·762·
	27 5	204 29 29·	
	27 56	204 31 31	19 27 30
(214p)	28 44	+ 1·267	
	29 33	204 28 28	204 29 30
	30 27	+ 1·167	
— 5·5124 (z)	19 31 11	+ 1·260	19 34 22
	31 52	204 34 34·	
(215s)	32 26	+ 1·284	73·087·
	33 34	204 24 25	
	35 21	204 25 26	19 34 27
(216p)	36 6	— 1·229	
	37 7	204 25 26	204 27 26
	37 46	— 1·140	
— 5·5124 (z)	19 39 45	— 1·052	19 42 36
	40 47	24 27 28	
(217s)	41 28	— 1·080	73·520·
	42 12	24 24 26	
	43 3	24 30·32	19 42 38
	43 49	+ 0·586	
(218p)	44 32	24 23 25	24 26 56
	45 23	+ 0·587	
— 5·5124 (z)	19 46 26	+ 0·626	19 49 4
	46 54	24 29 30	
(219s)	47 38	+ 0·707	73·768·
	48 32	24 29·29	
	49 42	24 29·30·	19 49 5
(220p)	50 23	— 0·936	
	51 14	24 25 27	24 28 26
	51 48	— 0·859	
— 5·5124 (z)	19 52 57	— 0·843	19 55 41
	53 36	204 28 28·	
(221s)	54 15	— 0·860	73·979·
	54 56	204 21 21·	
	55 47	204 30·31	19 55 32
(222p)	57 10	+ 0·840	
	57 51	204 21 21·	204 25 22
	58 24	+ 0·822	

1889, July 7. Obs. ELKIN, T. E.—*continued.*

Star.	Chronometer.	Micrometer.	Means.
	h m s	′ ″ ′ ″	h m s
Standards.	20 0 58	+ 1·280	20 3 10
	1 40	8 27 7 19	r 509·030
(223s)		5 49 4 34	
	4 4	8 3 7 23	20 2 52
(224p)		5 17 4 40	187 10 54
	5 22	— 1·250	

At Beginning, Thermometer 67°·5.
„ End „ 67°·0. Barometer 762·5 mm.
Chronometer Correction, — 1m. 24s. I. 2. S. 2.

1889, July 12. Obs. HALL, T. W.

Star.	Chronometer.	Micrometer.	Means.
	h m s	′ ″ ′ ″	h m s
Standards.	16 55 25	— 1·342	16 58 43
	56 39	4 16 4 53	r 508·885
(225s)		5 28 4 41	
	59 47	7 55 4 57	16 58 13
(226p)		9 8 4 43	7 11 53
	17 2 2	+ 1·227	
°		° ′ ″	
— 4·4960 (w)	17 36 24	— 0·727	17 41 26
	38 7	293 42 42	
(227s)	39 58	— 0·740	54·333·
	40 58	293 48 49	
	42 17	294 8 8·	17 41·34
(228p)	43 8	+ 1·042	
	44 53	294 12 13	293 57 49
	46 13	+ 1·092	
— 4·4960 (w)	17 48 21	+ 1·018	17 53 19
	49 31	114 21 22	
(229s)	50 26	+ 1·052	54·346
	52 10	114 32·33	
	55 6	114 10 10·	17 53 31
	55 48	— 0·691	
(230p)	57 19	114 30 30	114 23 37
	58 40	— 0·687	
— 4·4960 (w)	18 1 16	— 0·560	18 4 19
	2 14	294 28·29	
(231s)	2 58	— 0·670	54·535·
	4 0	294 38·39·	
	4 58	295 8· 9·	18 4 24
	5 40	+ 1·098	
(232p)	6 23	295 17 17·	294 53 30
	7 23	+ 1·203	

Digitized by Google

1889, July 12. Obs. HALL, T. W.—*continued.*

Star.	Chronometer.	Micrometer.	Means.
	h m s	° ′	h m s
− 4·4960 (w)	18 15 9	+ 1·150	18 23 2
	16 7	115 38·38	
(233s)	16 54	+ 1·083	r 54·584
	22 34	116 10 10	
	23 31	115 43 43	18 22 50
	26 13	− 0·562	
(234p)	29 10	115 47·48	115 49 49
	29 51	− 0·503	
− 4·4960 (w)	18 34 23	− 0·499	18 37 43
	35 31	296 11 12	
(235s)	36 19	− 0·512	54·756
	37 15	296 18·19	
	38 9	296 50 50	18 37 52
	38 44	+ 1·282	
(236p)	40 34	296 48 49	296 32 15
	41 25	+ 1·241	
		′ ″ ′ ″	
Standards.	18 57 28	+ 0·936	19 6 40
	58 30	7 16 5 13	509·216
(237s)		6 25 4 21	
	19 3 18	5 14 5 5	19 0 54
		4 24 4 17	187 11 5
(238p)	15 52	− 0·720	

At Beginning, Thermometer 70°·5.
„ End „ 69·0. Barometer 763·0 mm.
Chronometer Correction, — 1m 31s. I. 2. S. 2.
Moonlight ; Planet and Star faint.

1889, July 12. Obs. ELKIN, T. W.

Star.	Chronometer.	Micrometer.	Means.
	h	′ ″ ′ ″	h m s
Standards.	19 17 53	− 1·318	19 21 4
	19 45	7 22 5 8	r 509·007
(239s)		6 25 4 28	
	21 32	7 20 5 16	19 20 38
		6 21 4 27	
(240p)	24 15	+ 1·325	187 12 2
		° ′ ′	
− 4·4960 (w)	19 34 14	+ 1·427	19 38 23
	34 48	299 6 6	
(241s)	35 32	+ 1·460	55·281
	36 4	299 12 13	
	40 1	299 18 18	19 38 23
(242 p)	40 26	− 1·173	
	42 39	299 21 21	299 14 26
	43 21	− 1·152	

1886, July 12. Obs. ELKIN, T. W.—*continued.*

Star.	Chronometer.	Micrometer.	Means.
°	h m s	° ′ ′	h m s
− 4·4960 (w)	19 44 24	− 1·102	19 47 40
	45 48	119 28 28	
(243s)	46 33	− 1·148	r 55·427
	47 16	119 37 37	
	48 34	119 46 46	19 47 52
(244p)	49 13	+ 0·583	
	49 52	119 51 51	119 40 30
	50 28	+ 0·522	
− 4·4960 (w)	19 51 22	+ 0·434	19 58 32
	52 0	119 52 52	
(245s)	52 33	+ 0·536	55·471
	53 46	119 59 60	
	20 4 5	120 17 18	19 58 47
(246p)	4 31	− 1·011	
	5 16	120 22 22	120 7 45
	5 42	− 1·017	
− 4·4960 (w)	20 10 36	− 0·927	20 13 8
	11 15	300 39 40	
(247s)	11 54	− 0·988	55·736
	12 24	300 48 49	
	12 55	300 48 49	20 12 40
(248p)	13 21	+ 0·685	
	14 5	300 51 52	300 47 0
	16 43	+ 0·702	
− 4·4960 (w)	20 21 43	+ 0·730	20 24 49
	22 13	301 11 12	
(249s)	22 43	+ 0·740	55·865
	23 9	301 19 20	
	26 0	301 15 16	20 24 44
(250p)	26 46	− 0·888	
	27 34	301 28 28	301 18 37
	28 4	− 0·851	
− 4·4960 (w)	20 29 9	− 0·837	20 30 55
	29 42	121 25 26	
(251s)	30 17	− 0·888	55·909
	30 38	121 26 26	
	31 14	121 42 42	20 30 55
(252p)	31 43	+ 0·760	
	32 6	121 39 39	121 33 7
	32 31	+ 0·783	
		′ ″ ′ ″	
Standards.	20 43 16	+ 1·283	20 44 41
(253s)	43 46	6 54 4 50	508·980
		7 12 4 4	
	45 7	5 10 5 2	20 44 26
(254p)		5 29 4 4	7 11 41
	46 7	− 1·303	

At Beginning, Thermometer, 68°·5.
„ End „ 67·5. Barometer 763·0 mm.
Chronometer Correction, — 1m. 26s. I. —. S. —.

Digitized by Google

1889, July 15. Obs. HALL, T. W.

Star.	Chronometer.	Micrometer.	Means.
	h m s	′ ″ ′ ″	h m s
Standards.	16 52 24	+ 1·329	16 55 59
(2558)	54 31	7 51 4 27	r 508·931
		7 59 4 34	
	57 22	5 49 4 21	16 55 56
		6 2 4 33	r 187 12 26
(256p)	59 35	— 1·398	
	°	° ′	
— 5·5075 (v)	17 9 58	— 0·920	17 15 21
	11 32	— 0·877	
(257s)	12 46	52 38 38·	34·130
	14 0	— 0·848	17 15 32
(258p)	14 52	— 0·881	52 38 52
	15 38	52 22 22·	
	18 18	52 39 40	17 18 32
(259s)	19 21	+ 1·060	34·192·
	20 32	+ 0·997	
	21 27	52 56 57	17 18 32
(260p)	22 21	+ 1·020	52 39 22
	22 56	+ 1·096	
— 5·5075 (v)	17 26 17	+ 1·077	17 31 37
	27 14	+ 1·089	34·641·
(261s)	29 23	232 20 20	
	30 20	+ 1·230	17 32 9
	31 24	+ 1·198	231 51 7
(262p)	33 27	231 58·58	
	34 56	231 22 22·	17 35 20
	36 1	— 1·423	34·838
(263s)	37 6	— 1·460	
	38 21	231 6 7	17 35 54
(264p)	39 15	— 1·352	231 32 22
	40 21	— 1·400	
— 5·5075 (v)	17 42 53	— 1·333	17 47 35
	43 47	— 1·358	35·124
(267s)	46 24	50 53 54	
	47 14	— 1·272	17 48 25
(268p)	48 11	— 1·290	51 3 0
	49 1	50 30 30·	
	50 26	51 12·12·	17 51 10
(269s)	51 25	+ 0·500	35·326
	52 14	+ 0·439	
	53 12	51 4 6	17 51 6
(270p)	54 1	+ 0·534	50 47 37
	55 15	+ 0·690	
— 5·5075 (v)	17 59 43	+ 0·660	18 3 16
	18 0 29	+ 0·690	35·784·
(271s)	1 20	230 56 56	
	2 7	+ 0·679	18 3 17
(272p)	2 58	+ 0·680	230 28 7
	4 3	230 40 40	

1889, July 15. Obs. HALL, T. W.—*continued.*

Star.	Chronometer.	Micrometer.	Means.
°	h m s	° ′	h m s
— 5·5075 (v)	18 5 14	230 0 0·	18 5 59
	5 55	— 0·861	r 35·851
(273s)	6 56	— 0·920	
	8 1	229 57·57·	18 6 2
	8 56	— 0·817	230 18 45
(274p)	9 55	— 0·840	
		′ ″ ′ ″	
Standards.	18 14 42	+ 0·888	18 17 57
	16 16	7 34 4 50	507·089
(275s)		8 21 4 31	
	19 13	4 55 4 53	18 17 44
(276p)		5 44 4 28	7 11 58
	21 12	— 0·799	

At Beginning, Thermometer 58°·0.
„ End „ 56·5. Barometer 758·0 mm.
Chronometer Correction, —1m·21s. I. 3. S. 3.

1889, July 15. Obs. ELKIN, T. E.

Star.	Chronometer.	Micrometer.	Means.
	h m s	′ ″ ′ ″	h m s
Standards.	19 34 11	+ 1·280	19 35 58
(277s)	34 41	6 27 6 23	r 508·981
		5 23 4 25	
	36 24	5 55 6 20	19 35 32
		4 56 4 18	7 10 18
(278p)	37 45	— 1·299	
	°	° ′ ′	
— 5·5075 (v)	19 43 19	— 1·053	19 45 47
	44 24	46 12 13	
(279s)	45 1	— 1·070	39·476
	45 34	46 4 5	
	46 14	46 12 13	19 45 53
	46 47	— 0·565	
(280p)	47 19	45 48 49	46 4 30
	47 59	— 0·510	
— 5·5075 (v)	19 48 55	+ 0·510	19 51 19
	49 34	226 8 8	
(281s)	50 15	+ 0·612	39·616·
	51 1	225 56 56	
	51 44	226 4 4	19 51 24
	52 13	+ 0·972	
(282p)	53 15	225 59 59	226 1 45
	53 53	+ 0·917	

Digitized by Google

1889, July 15. Obs. ELKIN, T. E.—*continued.*

Star.	Chronometer.	Micrometer.	Means.
	h m s	° ′ ″	h m s
− 5·5075 (v)	19 54 24	+ 0·929	19 56 49
	55 1	225 50 51	r
(283s)	55 56	+ 0·956	39·752
	56 26	226 0 0	
	57 25	225 51 51	19 56 55
	57 50	+ 0·698	
(284p)	58 48	225 45 45	225 51 37
	59 25	+ 0·691	
− 5·5075 (v)	20 0 50	+ 0·703	20 3 20
	1 43	45 37 38	
(285s)	2 17	+ 0·851	40·074·
	2 46	45 32 33	
	3 44	45 27 28	20 3 20
	4 25	− 0·744	
(286p)	5 16	45 31 32	45 32 15
	5 51	− 0·661	
− 5·5075 (v)	20 6 48	− 0·665	20 8 39
	7 8	45 27 28	
(287s)	7 35	− 0·666	40·340
	8 4	45 22 23	
	8 48	45 12 13	20 8 28
	9 22	+ 1·052	
(288p)	9 58	45 8 9	45 17 45
	10 48	+ 0·959	
− 5·5075 (v)	20 13 7	+ 0·936	20 15 39
	14 1	225 20 20	
(289s)	14 55	+ 1·060	40·514·
	15 35	225 10 10	
	16 9	225 9 10	20 15 44
	16 39	− 1·498	
(290p)	17 13	225 1 2	225 10 15
	17 57	− 1·469	
		′ ″ ′ ″	
Standards.	20 21 17	− 1·248	20 23 18
	22 4	7 42 7 32	
(291s)		4 28 4 20	508·995
	23 53	8 17 7 34	20 22 58
		5 1 4 25	187 10 24
(292p)	25 19	+ 1·243	

At Beginning, Thermometer 55°·0.
„ End „ 54·5. Barometer 759·0 mm.
Chronometer Correction, —1m. 19s. I. 3. S. 3.

1889, July 16. Obs. ELKIN, T. W.

Star.	Chronometer.	Micrometer.	Means.
°	h m s	° ′ ″	h m s
− 4·4936 (u)	17 41 10	− 1·483	17 42 56
	41 56	244 36 36	r
(293s)	42 36	− 1·493	8·537
	43 9	+ 1·000	17 43 8
(294p)	44 20	245 8 8	244 52 0
	44 48	+ 1·050	
− 4·4936 (u)	17 45 59	+ 0·990	17 47 22
	46 28	65 6 6	8·449·
(295s)	46 48	+ 0·998	
	47 39	− 0·520	17 47 19
(296p)	48 11	66 39 39	65 52 30
	49 1	− 0·569	
− 4·4936 (u)	17 50 27	− 0·690	17 52 0
		67 13 13	
(297s)	51 45	− 0·715	8·327
		68 8 8	
	52 32	+ 0·860	17 52 0
		67 3 3	
(297p)	53 14	+ 0·872	67 12 7
		66 24 25	
− 4·4936 (u)	17 54 43	+ 0·778	17 56 26
		246 3 3	
(298s)	55 45	+ 0·780	8·047
		248 4 4	
	57 14	− 0·753	17 56 14
		248 38 38	
(299p)	58 1	− 0·758	247 50 45
		p. not read.	
		′ ″ ′ ″	
Standards.	18 1 33	− 1·247	18 3 34
	2 1	7 57 5 59	508·975
(300s)		6 27 4 24	
	4 17	6 44 6 8	18 3 9
		5 10 4 28	187 11 19
(301p)	5 36	+ 1·222	
°		° ′ ″	
− 4·4936 (u)	18 7 26	− 0·824	18 8 49
		250 32 32	
(302s)	8 18	− 0·820	7·760
		252 8 8	
	9 16	+ 0·736	18 8 49
		252 26 26	
(302p)	10 15	+ 0·668	251 53 0
		252 26 26	

Digitized by Google

1889, July 16. Obs. ELKIN, T. W.—*continued.*

Star.	Chronometer.	Micrometer.	Means.
°	h m s	° ′ ″	h m s
— 4·4936 (u)	18 11 51	+ 0·717	18 13 14
		72 34 35	
(303s)	12 36	+ 0·725	r 7·770
		72 54 55	
	13 50	— 0·840	18 13 14
(303p)		72 44 44	° ′ ″
	14 39	— 0·832	72 51 30
		73 13 13	
— 4·4936 (u)	18 16 52	— 0·948	18 18 52
	17 39	74 31 32	
(304s)	18 37	— 0·883	7·704
	19 15	+ 0·624	18 18 48
(305p)	19 57	74 58 58	74 44 45
	20 45	+ 0·615	
— 4·4936 (u)	18 21 51	+ 0·563	18 23 17
	22 29	255 47 47	
(306s)	23 2	+ 0·569	7·587
	23 39	— 0·961	18 23 17
(307p)	24 5	256 0 1	255 53 45
	24 37	— 0·997	

At Beginning, Thermometer 63°·5.
„ End „ 63°·5. Barometer 761·5 mm.
Chronometer Correction, — 1m. 19s. I. 3. S. 2–3.
Observation from 17h. 50m. to 18h. 14m. are single distances, *s* and *p* being observed together like a double star.

1889, July 16. Obs. HALL, T. E.

Star.	Chronometer.	Micrometer.	Means.
°	h m s	° ′ ″	h m s
— 4·4936 (u)	20 11 9	— 0·902	20 15 5
		290 2 2	
(309s)	13 48	— 0·950	7·419
		291 57 57	
	15 50	+ 0·611	20 15 5
(309p)		298 15 15	
	19 32	+ 0·660	294 50 0
		299 6 6	
— 4·4936 (u)	20 21 12	+ 0·642	20 24 39
		301 8 8	
(310s)	23 33	+ 0·598	7·433
		p not read.	
	25 21	— 0·909	20 24 4
(311p)		296 43 43	
	28 30	— 0·898	299 37 22
		299 30·30·	

1889, July 16. Obs. HALL, T. E.—*continued.*

Star.	Chronometer.	Micrometer.	Means.
°	h m s	° ′ ″	h m s
— 4·4936 (u)	20 32 25	— 0·919	20 35 7
		120 17 17	
(312s)	34 38	— 0·849	r 7·465
		121 48 48	
	35 47	+ 0·625	20 35 7
(312p)		123 57 57	° ′ ″
	37 40	+ 0·608	122 57 30
		125 48 48	
— 4·4936 (u)	20 40 55	+ 0·603	20 43 29
		124 12 12	
(313s)	42 23	+ 0·662	7·706
		126 6 6	
	44 18	— 0·847	20 43 29
(313p)		122 41 41	
	46 20	— 0·712	124 41 37
		123 47·47·	
— 4·4936 (u)	20 50 18	— 0·772	20 53 19
		305 16·17	
(314s)	52 24	— 0·823	7·756
		304 2 2	
	54 18	+ 0·669	20 53 19
(314p)		309 44 45	
	56 15	+ 0·682	307 23 15
		310 29·30	
— 4·4936 (u)	20 58 9	+ 0·820	21 1 28
		310 46 46	
(315s)	21 0 34	+ 0·803	8·197
		311 51·52	
	2 36	— 0·693	
(315p)		308 32·33	21 1 28
	4 35	— 0·733	
		308 38·39	309 57 19
— 4·4936 (u)	21 7 29	— 0·771	21 10 15
		129 52 52	
(316s)	8 52	— 0·709	8·101
		130 56 56	
	10 52	+ 0·850	21 10 15
(316p)		133 42 42	
	13 49	+ 0·731	132 11 30
		134 16 16	
		′ ″ ′ ″	
Standards.	21 19 37	— 0·727	21 23 26
	21 6	5 31 6 37	
(317s)		3 34 4 47	509·159
	24 23	8 5 6 32	21 22 44
		6 17 4 37	
(318p)	27 16	+ 0·886	187 10 13
		° ′ ″	
— 4·4936 (u)	21 33 12	— 0·620	21 36 40
		136 6 5	
(319s)	35 42	— 0·632	8·769
		130 10·10	

Digitized by Google

1889, July 16. Obs. HALL, T. E.—*continued.*

Star.	Chronometer.	Micrometer.	Means.
°	h m s	° ′ ″	h m s
— 4·4936 (u)	21 37 54	+ 1·048	21 36 40
		139 2 3	
(319p)	39 51	+ 0·973	136 16 22
		139 47 47	
— 4·4936 (u)	21 41 58	+ 0·917	21 45 7
		141 13 13	r
(320s)	43 59	+ 0·913	8·830
		142 47 46	
	46 16	— 0·422	21 45 7
(320p)		139 44 44	
	48 16	— 0·578	141 11 26
		141 2 2	
— 4·4936 (u)	21 51 24	— 0·475	21 54 26
		322 41·42	
(321s)	53 28	— 1·276	9·655
		321 40 40	
	55 9	+ 1·219	21 54 26
(321p)		322 31·32	
	57 43	+ 1·187	323 1 34
		325 12 13	
— 4·4936 (u)	22 0 27	+ 1·220	22 4 43
		324 8 8	
(322s)	2 11	+ 1·250	9·918
		325 41 41	
	6 38	— 1·302	22 4 43
(322p)		325 50·51	
	9 36	— 1·250	325 7 11
		324 48 49	
— 4·4936 (u)	22 12 59	— 1·289	22 15 43
		145 20 20	
(323s)	14 29	— 1·206	9·966
		146 36 36	
	16 47	+ 1·239	22 15 43
(323p)		147 48 48	
	18 36	+ 1·222	146 59 22
		148 13 14	
— 4·4936 (u)	22 20 27	+ 1·246	22 23 52
		148 31 31	
(324s)	22 15	+ 1·319	10·104
		149 14 14	
	25 16	— 1·319	22 23 52
(324p)		147 34 35	
	27 29	— 1·142	148 20 30
		148 2 2	

At Beginning, Thermometer 63°·0.
„ End „ 59·5. Barometer 760·5 mm.
Chronometer Correction, — 1m. 17s. I. 2–1. S. 2–1.
These are all single distances.

1889, July 17. Obs. HALL, T. W.

Star.	Chronometer.	Micrometer.	Means.
	h m s	′ ″ ′ ″	h m s
Standards.	17 13 1	+ 1·329	17 16 16
	14 11	7 44 5 20	r
(325s)		6 40 4 18	509·132
	17 4	6 30 5 26	17 15 37
(326p)		5 32 4 22	
	19 32	— 1·197	187 11 45
		°	
— 4·4926 (t)	17 31 43	322 53′ 53″	17 35 43
	32 42	322 47 48	11·587
(327s)	33 40	— 1·042	
	34 57	323 29 29	17 35 46
	35 51	323 50 51	324 15 49
(328p)	36 50	— 0·990	
	37 45	+ 0·629	17 38 53
	38 41	325 44 46	11·751
(329s)	39 55	325 37·38	
	40 57	+ 0·741	17 39 20
(330p)	42 40	325 46 47	324 48 22
	43 52	326 7 7	
— 4·4926 (t)	17 46 6	145 51·51	17 51 9
	47 17	146 21·21	12·191
(331s)	48 13	+ 0·861	
	49 46	147 23 23	17 51 15
	51 2	146 59·59	146 17 37
(332p)	52 17	+ 0·967	
	54 3	— 0·670	17 54 53
	55 22	145 58 58	12·301
(333s)	56 11	146 59 59	
	57 29	— 0·666	17 55 4
(334p)	59 8	147 0 0	147 13 34
	18 0 21	147 32 32	
— 4·4926 (t)	18 3 53	327 8 9	18 8 48
	5 12	327 11·12	12·602
(335s)	5 59	— 0·581	
	7 7	327 40 40	18 9 20
	8 44	327 49·50	328 39 26
(336p)	10 43	— 0·428	
	11 37	+ 1·183	18 13 33
	13 27	330 22 22	12·804
(337s)	14 48	329 54 56	
	16 23	+ 1·232	18 13 18
(338p)	18 2	330 11·11	329 6 4
	19 21	330 42·43	
Standards.	18 25 59	— 0′·748″ ′ ″	18 29 39
	27 28	5 46 6 19	509·080
(339s)		5 1 4 11	
	30 21	9 34 6 19	18 28 54
(340p)		8 37 4 17	17 11 57
	33 20	+ 0·828	

At Beginning, Thermometer 66°·0.
„ End „ 65·5. Barometer 762·0 mm.
Chronometer Correction, — 1m. 16s. I. 2. S. 2.

Digitized by Google

1889, July 17. Obs. ELKIN, T. E.

Star.	Chronometer.	Micrometer.	Means.
°	h m s	° ′ ″	h m s
— 4·4926 (t)	20 20 43	— 0·830	20 26 4
	22 49	342 2 2	r
(341s)	26 5	— 0·853	17·892
	26 56	341 21 21	
	27 30	341 27 27	20 26 31
(342p)	27 55	+ 0·687	
	28 51	341 53 53	341 40 45
	29 33	+ 0·780	
— 4·4926 (t)	20 30 25	+ 0·735	20 32 19
	31 4	161 51 52	
(343s)	31 44	+ 0·754	18·027
	32 19	162 0 0	
	32 45	162 3 3	20 32 26
(344p)	33 7	— 0·693	
	33 36	162 1 2	161 59 0
	34 2	— 0·742	
— 4·4926 (t)	20 34 37	— 0·743	20 37 6
	35 57	162 41 41	
(345s)	36 18	— 0·686	18·224
	37 2	161 54 54	
	37 36	162 2 3	20 37 21
(346p)	38 5	+ 0·892	
	38 50	162 29 30	162 16 45
	39 23	+ 0·985	
— 4·4926 (t)	20 40 14	+ 0·936	20 42 19
	41 1	342 23 23	
(347s)	41 23	+ 0·983	18·456
	42 14	342 58 59	
	42 57	343 13 13	20 42 32
(348p)	43 21	— 0·464	
	43 55	342 49 49	342 50 52
	44 20	— 0·543	
		′ ″ ′ ″	
Standards.	20 47 21	— 1·263	20 49 29
	48 7	7 19 7 31	509·007
(349s)		5 28 4 24	20 49 10
	50 13	6 31 7 53	7 10 10
		4 33 4 20	
(350p)	51 38	+ 1·270	
°		° ′ ″	
— 4·4926 (t)	20 53 47	+ 1·240	20 55 59
	54 33	343 8 9	
(351s)	55 0	+ 1·250	19·003
	55 33	343 32 32	
	56 30	343 47 47	20 56 7
(352p)	56 55	— 1·238	
	57 54	343 22 22	343 27 22
	58 16	— 1·246	

1889, July 17. Obs. ELKIN, T. E.—*continued.*

Star.	Chronometer	Micrometer.	Means.
°	h m s	° ′ ″	h m s
— 4·4926 (t)	20 58 58	— 1·234	21 0 48
	59 29	163 40 40	
(353s)	59 53	— 1·180	r 19·186·
	21 0 31	163 24 24	
	0 55	163 32 32	21 0 47
(354p)	1 24	— 1·362	
	2 14	163 39 39	163 33 45
	2 59	— 1·427	
— 4·4926 (t)	21 3 29	— 1·450	21 5 19
	4 1	164 1 1	
(355s)	4 26	— 1·437	19·384
	5 2	164 0 0	
	5 30	164 13 14	21 5 22
(356p)	6 1	— 1·068	
	6 54	163 50 50	164 1 7
	7 20	— 1·051	
— 4·4926 (t)	21 8 6	— 1·030	21 9 54
	8 44	344 17 17	
(357s)	9 7	— 0·983	19·598·
	9 41	344 20 20	
	10 22	344 14 15	21 9 59
(358p)	10 44	— 0·600	
	11 10	344 8 8	344 14 52
	11 39	— 0·610	

At Beginning, Thermometer 62°·5.
„ End „ 61°·5. Barometer 762·0 mm.
Chronometer Correction, — 1m. 14s. I. 2-3. S. 2-3.

1889, July 18. Obs. ELKIN, T. W.

Star.	Chronometer.	Micrometer.	Means.
	h m s	′ ″ ′ ″	h m s
Standards.	17 18 35	+ 1·151	17 21 6
	19 56	5 40 3 12	r 508·871
(359s)		8 27 4 35	
	21 53	4 42 3 15	17 20 54
		7 23 4 22	7 12 42
(360p)	23 37	— 1·280	
°			
— 4·4926 (t)	17 25 53	— 1·380	17 30 14
	26 33	2 20 21·	
(361s)	27·40	— 1·430	68·878·
	28·59	2 15 16	
	32·40	2 28 29·	17 30 31
(362p)	33·10	+ 1·311	
	33·52	2 20·21	2 21 26
	34·15	+ 1·256	

Digitized by Google

1889, July 18. Obs. ELKIN, T. W.—*continued.*

Star.	Chronometer.	Micrometer.	Means.
°	h m s	° ′ ″	h m s
— 4·4926 (t)	17 35 24	+1·290	17 37 43
	35 53	182 29·30	
(363s)	36 31	+ 1·417	r 69·221·
	37 7	182 25·25	
	38 15	182 24 24	17 37 43
(364p)	38 50	— 1·154	
	39 38	182 25·25	182 26 3
	40 6	— 1·110	
— 4·4926 (t)	17 41 6	— 1·082	17 43 19
	41 35	182 21·21·	
(365s)	42 5	— 1·143	69·437
	42 59	182 25 25	
	43 33	182 30·30	17 43 16
(366p)	44 5	+ 0·568	
	44 57	182 23 23	182 24 56
	46 1	+ 0·531	
— 4·4926 (t)	17 47 2	+ 0·560	17 49 45
	47 46	2 33 35	
(367s)	48 21	+ 0·604	69·725·
	49 15	2 28·29·	
	49 58	2 24 26	17 49 43
(368p)	50 59	— 0·910	
	51 54	2 28·29·	2 29 15
	52 38	— 0·803	
— 4·4926 (t)	18 1 58	— 0·600	18 4 4
	2 51	2 29·30·	
(369s)	3 31	— 0·557	70·423
	3 55	2 29·30·	
	4 19	2 36 37	18 4 19
(370p)	5 6	+ 0·936	
	5 48	2 31 32	2 32 0
	6 3	+ 1·067	
— 4·4926 (t)	18 7 8	+ 1·085	18 9 18
	7 40	182 28 28	
(371s)	8 37	+ 1·042	70·612·
	9 2	182 31 31	
	9 36	182 38 38	18 9 22
(372p)	10 19	— 0·490	
	10 53	182 29·29·	182 31 37
	11 25	— 0·412	
— 4·4926 (t)	18 11 54	— 1·423	18 13 54
	12 35	182 29·29·	
(373s)	13 10	— 1·399	70·796
	13 31	182 34 34	
	14 15	182 34 34	18 13 58
(374p)	14 43	+ 1·177	
	15 26	182 29·29·	181 31 45
	15 56	+ 1·237	

1889, July 18. Obs. ELKIN, T. W.—*continued.*

Star.	Chronometer.	Micrometer.	Means.
°	h m s	° ′ ″	h m s
— 4·4926 (t)	18 16 48	+ 1·223	18 18 58
	17 37	2 31 32	
(375s)	18 17	+ 1·271	r 71·049
	18 43	2 40·41	
	19 11	2 36 37	18 19 4
(376p)	19 39	— 1·256	
	20 45	2 27 27·	2 34 0
	21 29	— 1·140	
		′ ″ ′ ″	
Standards.	18 24 57	— 1·357	18 26 47
	25 29	4 53 3 22	
(377s)		5 55 4 24	508·919
	27 1	5 54 3 23	18 26 15
(378p)		6 58 4 24	187 12 1
	28 38	+ 1·276	

At Beginning, Thermometer 66°·0.
„ End „ 64·5. Barometer 762·0 mm.
Chronometer Correction, — 1m. 14s. I. 2-3. S. 3.

1889, July 18. Obs. HALL, T. E.

Star.	Chronometer.	Micrometer.	Means.
	h m s	′ ″ ′ ″	h m s
Standards.	20 14 1	— 1·271	20 18 7
	15 17	2 36 3 50	r
(379s)		2 56 4 8	509·081
	19 33	6 44 3 50	20 17 25
(380p)		7 12 4 26	187 10 48
	22 14	+ 1·352	
		° ′ ″	
— 4·4926 (t)	20 29 41	3 4 5	20 35 32
	31 32	2 54 56	
(381s)	32 35	+ 1·322	77·165
	33 55	3 1· 2·	20 35 50
	35 47	3 6 7	2 58 45
(382p)	37 14	+ 1·421	
	38 29	— 1·157	20 40 19
	40 19	2 59 58	
(383s)	41 49	2 57·58	77·353
	43 24	— 1·068	20 40 20
(384p)	44 49	2 52 53	
	46 49	2 41 42	2 55 37
— 4·4926 (t)	20 49 27	182 54 55	20 54 29
	50 37	182 48·49	
(385s)	51 51	— 0·898	77·933
	53 25	182 59 59	20 54 24
(386p)	54 45	182 56 56	182 59 48
	55 50	— 0·808	
	57 8	+ 0·831	20 58 5
(387s)	58 11	183 12 12	78·055
	59 20	183 4 4	

Digitized by Google

1889, July 18. Obs. HALL, T. E.—*continued.*

Star.	Chronometer.	Micrometer.	Means.
°	h m s	° ′ ″	h m s
— 4·4926 (t)	21 0 20	+ 0·863	20 58 19
	1 30	183 6· 7	183 3 7
(388p)	3 36	183 10·11	
— 4·4926 (t)	21 5 49	3 0 1	21 11 8
	7 9	3 3 5	r 78·790
(389s)	8 26	+ 1·150	
	9 23	3 11·13	21 11 28
	10 54	3 10 10·	2 58 37
(390p)	12 22	+ 1·231	
	13 51	— 1·360	21 15 25
	15 25	2 57 58	78·951
(391s)	17 30	2 52 53	
	18 28	— 1·280	21 15 18
(392p)	19 34	2 55 56	2 4 33
	21 23	3 0 0·	
— 4·4926 (t)	21 27 41	183 2 2	21 32 26
	28 36	183 0· 0·	79·585
(393s)	29 45	— 1·058	
	31 10	182 58 58	21 32 27
	32 15	182 59·59	183 7 7
(394p)	33 22	— 0·937	
	35 7	+ 0·643	21 36 6
	36 7	183 18 18	79·840
(395s)	37 26	183 8 8	
	38 51	+ 0·777	21 36 18
(396p)	40 42	183 19 19	183 8 34
	41 31	183 18 18	
— 4·4926 (t)	21 44 54	3 10 11	21 49 37
	45 45	3 10·11·	80·392
(397s)	47 2	+ 0·931	
	48 1	3 11 12	21 49 52
	49 41	3 7 8	3 7 53
(398p)	50 42	+ 1·016	
	52 12	— 0·539	21 53 23
	53 56	3 4 6	80·536
(399s)	54 53	3 4 6	
	56 4	— 0·480	21 53 29
(400p)	57 39	3 1 2·	3 6 0
	58 36	3 2· 4	
		′ ″ ′ ″	
Standards.	22 7 14	+ 0·900	22 11 22
	8 15	4 6 3 18	509·118
(401s)		6 51 4 28	
	11 42	2 5 3 19	22 9 58
(402p)		4 48 4 34	7 10 32
	15 31	— 0·782	

At Beginning, Thermometer 63°·0.
„ End „ 60·5. Barometer 761·5 mm.
Chronometer Correction, — 1m. 12s. I. —. S.—.

1889, July 20. Obs. ELKIN, T. W.

Star.	Chronometer.	Micrometer.	Means.
	h m s	′ ″ ′ ″	h m s
Standards.	17 40 27	+ 1·160	17 42 30
	41 16	5 51 3 18	r 508·901
(403s)		7 33 3 52	
	43 15	5 39 3 15	17 42 15
(404p)		7 30 4 2	7 13 1
	44 34	— 1·259	
°		° ′	
— 4·4903 (q)	18 7 3	341 30·31	18 8 25
	7 37	29·30	74·908
(405s)	8 4	— 1·287	
	8 46	+ 1·195	18 8 36
(406p)	9 32	341 32 32·	341 30 56
	10 14	30·31·	
— 4·4903 (q)	18 11 21	161 35 36	18 12 37
	11 56	29·29·	74·821
(407s)	12 22	+ 1·231	
	12 52	— 1·410	18 12 39
(408p)	13 27	161 31 31	161 30 22
	13 53	25 26	
— 4·4903 (q)	18 14 28	161 32 32	18 15 32
	14 47	29·29·	74·636
(409s)	15 11	— 1·462	
	15 54	+ 1·098	18 15 38
(410p)	16 28	161 26 26	161 27 22
	16 51	22 22	
— 4·4903 (q)	18 17 44	341 29·29·	18 19 7
	18 15	29 29	74·485
(411s)	18 42	+ 1·045	
	19 32	— 0·560	18 19 8
(412p)	20 8	341 24 24	341 25 22
	20 27	19 19	
— 4·4903 (q)	18 26 31	341 18 18	18 28 44
	27 48	11 11	74·133
(413s)	28 24	— 0·713	
	29 4	+ 0·846	18 28 28
(414p)	29 34	341 12 12·	341 15 37
	29 58	21 21·	
— 4·4903 (q)	18 31 14	161 19 19	18 32 38
	31 47	15 15	73·830
(415s)	32 17	+ 0·740	
	32 59	— 0·910	18 33 3
(416p)	34 17	161 11 11	161 13 15
	34 55	8 8	
	clouded up.		

At Beginning, Thermometer 73°·5.
„ End „ 70·5. Barometer 759·0 mm.
Chronometer Correction, — 1m. 18s I. —. S. —.

Digitized by Google

1889, July 21. Obs. HALL, T. W.

Star.	Chronometer.	Micrometer.	Means.
	h m s	′ ″ ′ ″	h m s
Standards.	16 56 32	+ 1·291	17 0 9
	58 5	5 38 2 59	r 508·999
(417s)		6 55 4 16	
	17 1	3 45 2 58	16 59 34
(418p)		5 2 4 22	187 11 41
	3 46	— 1·292	
	°	° ′ ″	
— 4·4903 (q)	17 9 51	— 1·380	17 13 52
	10 45	116 22 22·	
(419s)	11 42	— 1·351	32·840·
	12 37	116 21·22	
	14 51	116 50 50·	17 13 53
(420p)	15 50	+ 1·211	
	17 21	116 27·28	116 30 30
	18 6	+ 1·201	
— 4·4903 (q)	17 21 6	+ 1·208	17 25 18
	22 31	296 19·20	
(421s)	23 36	+ 1·148	32·669·
	24 43	296 13 14	
	26 14	295 30·31	17 25 28
(422p)	27 18	— 1·468	
	28 24	295 20 20	295 51 0
	29 14	— 0·549	
— 4·4903 (q)	17 32 5	— 0·562	17 35 42
	33 4	114 52 52·	
(423s)	33 50	— 0·518	32·519
	34 59	114 36 36·	
	36 23	115 27·28	17 35 48
(424p)	37 24	+ 1·070	
	38 48	115 11 11	115 1 48
	39 31	+ 1·048	
— 4·4903 (q)	17 42 31	+ 1·002	17 45 46
	43 28	294 50 50	
(425s)	44 19	+ 0·981	32·312
	45 4	294 32·33	
	46 24	294 5 6	17 45 47
(426p)	47 20	— 0·703	
	48 11	293 53 54	294 20 26
	48 55	— 0·656	
— 4·4903 (q)	17 54 23	— 0·713	17 57 37
	55 23	113 17 17·	
(427s)	56 3	— 0·668	32·213
	57 24	113 16·17	
	58 20	113 28 28·	17 57 52
	59 2	+ 0·929	
(428p)	18 0 21	113 20 20	113 20 34
	0 59	+ 0·878	

1889, July 21. Obs. HALL, T. W.—*continued.*

Star.	Chronometer.	Micrometer.	Means.
	°	h m s	° ′ ″
— 4·4903 (q)	18 3 41	+ 0·923	18 7 15
	4 22	293 17 18	
(429s)	5 9	+ 0·868	r 32·054
	6 30	293 7 8	
	7 28	292 29·30	18 7 11
(430p)	9 0	— 0·858	
	10 26	292 9 10	292 45 48
	11 12	— 0·825	
— 4·4903 (q)	18 13 51	— 0·800	18 16 59
	14 34	112 7 7	
(431s)	15 23	— 0·862	31·927
	16 41	111 37 37	
	17 42	112 4 5	18 17 6
(432p)	18 31	+ 0·729	
	19 26	111 58·59	111 56 50
	20 11	+ 0·787	
— 4·4903 (q)	18 22 38	+ 0·742	18 26 36
	23 36	291 51·52	
(433s)	24 18	+ 0·780	31·846·
	25 43	291 53 55	
	28 3	291 1· 2	18 26 53
(434p)	28 41	— 0·902	
	30 12	290 32 33	291 20 0
	30 48	— 0·927	
		′ ″ ′ ″	
Standards.	18 32 51	— 0·777	18 36 8
	34 19	3 17 3 18	509·074
(435s)		5 37 4 22	
	37 6	6 46 3 19	18 35 42
(436p)		9 0 4 28	7 12 18
	39 25	+ 0·851	

At Beginning, Thermometer 68°·0.
„ End. „ 65°·0. Barometer 762·0 mm.
Chronometer Correction, — 1m. 13s. I. 3. S. 3.

1889, July 21. Obs. ELKIN, T. E.

Star.	Chronometer.	Micrometer.	Means.
	h m s	′ ″ ′ ″	h m s
Standards.	20 50 15	+ 1·270	20 52 43
	50 51	4 6 4 28	r 509·022
(437s)		5 38 4 17	
	53 45	4 51 4 30	20 52 18
(438p)		5 59 4 22	7 10 44
	55 11	— 1·248	

Digitized by Google

1889, July 21. Obs. ELKIN, T. E.—*continued.*

Star.	Chronometer.	Micrometer.	Means.
c	h m s	° ′ ″	h m s
— 4·4903 (q)	20 57 44	— 0·491	20 59 53
(439s)	58 33	99 35 37	r 30·559·
	59 43	— 1·460	
	21 0 22	+ 1·060	20 59 51
(440p)	1 9	99 10 11	99 23 15
	1 42	+ 1·010	
— 4·4903 (q)	21 2 53	+ 1·082	21 4 50
(441s)	3 29	279 3 4	30·551
	4 17	+ 1·048	
	5 14	— 0·490	21 4 53
(442p)	6 17	278 28 29	278 46 0
	6 55	— 0·538	
— 4·4903 (q)	21 7 33	— 1·500	21 9 17
(443s)	8 7	278 18 19	30·570
	9 3	— 1·486	
	9 38	+ 1·086	21 9 12
(444p)	10 18	278 29 30	278 24 0
	10 55	+ 1·040	
— 4·4903 (q)	21 11 57	+ 1·011	21 13 35
(445s)	12 37	98 19 20	30·484
	13 18	+ 1·046	
	13 51	— 1·497	21 13 31
(446p)	14 25	97 47 48	98 3 30
	15 18	— 0·592	
— 4·4903 (q)	21 21 1	— 0·558	21 22 47
(447s)	21 38	97 29 30	30·506·
	22 21	— 0·480	
	23 8	+ 0·983	21 22 50
(448p)	24 3	97 18 19	97 24 0
	24 39	+ 1·068	
— 4·4903 (q)	21 25 36	+ 1·010	21 27 34
(449s)	26 35	277 21 22	30·437
	27 3	+ 1·015	
	27 45	— 0·569	21 27 40
(450p)	28 46	276 38 38	276 59 45
	29 51	— 0·582	
— 4·4903 (q)	21 30 29	— 0·570	21 32 16
(451s)	31 2	276 28 28	30·472
	31 50	— 0·510	
	32 36	+ 1·006	21 32 9
(452p)	33 17	276 28 28	276 28 0
	34 10	+ 1·018	

1889, July 21. Obs. ELKIN, T. E.—*continued.*

Star.	Chronometer.	Micrometer.	Means.
°	h m s	° ′ ″	h m s
— 4·4903 (q)	21 34 59	+ 1·056	21 37 9·
(453s)	35 33	96 25 25	r 30·488
	36 54	+ 1·049	
	37 36	— 0·578	21 37 2
(454p)	38 31	96 13 14	96 19 15
	39 9	— 0·551	
		′ ″ ′ ″	
Standards.	21 41 7	— 1·266	21 43 22
(455s)	41 44	6 21 6 18	508·987
		4 25 4 6	
	43 52	8 19 6 31	21 42 48
(456p)		6 22 4 16	187 11 4
	45 38	+ 1·253	

At Beginning, Thermometer 64°·0.
„ End „ 63·5. Barometer 762·0 mm.
Chronometer Correction, — 1m. 11s I. 3. S. 3.

1889, July 22. Obs. ELKIN, T. W.

Star.	Chronometer.	Micrometer.	Means.
	h m	′ ″ ′ ″	h m s
Standards.	17 20 48	+ 1·253	17 22 33
(457s)	21 29	4 51 3 19	r 508·964
		5 27 4 7	
	23 7	4 40 3 18	17 22 18
(458p)		5 24 4 3	187 11 23
	24 19	— 1·289	
°		° ′ ″	
— 4·4903 (q)	17 26 12	— 0·993	17 27 50
(459s)	26 54	— 9·937	55·673·
	27 27	217 50 50	
	28 12	47 47	17 27 49
(460p)	28 48	+ 0·620	217 48 30
	29 25	+ 0·657	
— 4·4903 (q)	17 31 20	+ 0·616	17 33 26
(461s)	32 2	+ 0·675	55·855
	32 59	37 48 49	
	34 15	35 36	17 33 37
(462p)	34 53	— 0·729	37 42 0
	35 28	— 0·852	
— 4·4903 (q)	17 36 3	— 0·792	17 39 19
(463s)	38 33	— 0·691	56·144·
	39 40	37 27 27	
	40 18	27 27	17 39 59
(464p)	41 2	+ 0·852	37 27 0
	41 38	+ 0·920	

Digitized by Google

1889, July 22. Obs. ELKIN, T. W.—*continued.*

Star.	Chronometer.	Micrometer.	Means.
°	h m s	° ′ ″	h m s
− 4·4903 (q)	17 42 26	+ 0·856	17 44 2
	43 1	+ 0·868	r
(465s)	43 45	217 29 29	56·221·
	44 28	28 28	17 44 6
(466p)	45 8	− 0·650	217 28 30
	45 33	− 0·631	
− 4·4903 (q)	18 0 46	− 1·358	18 2 21
	1 22	− 1·320	
(467s)	2 5	216 55 55	56·942
	2 46	58 58	18 2 25
(468p)	3 21	+ 1·264	216 56 30
	3 56	+ 1·298	
− 4·4903 (q)	18 4 49	+ 1·270	18 6 40
	5 30	+ 1·267	
(469s)	6 10	36 59 60	57·081
	6 58	39 40	18 6 34
(470p)	7 49	− 1·200	36 49 30
	8 32	− 1·175	
− 4·4903 (q)	18 9 15	− 1·248	18 11 11
	9 43	− 1·148	
(471s)	10 23	36 47 48	57·186·
	11 35	45 45	18 10 59
(472p)	12 2	+ 1·396	36 46 15
	13 46	+ 1·373	
− 4·4903 (q)	18 14 38	+ 1·429	18 16 22
	15 11	+ 1·491	
(473s)	16 19	216 39 40	57·401·
	17 2	30 30	18 16 40
(474p)	17 36	− 1·105	216 34 45
	18 2	− 1·012	
		′ ″ ′ ″	
Standards.	18 20 31	− 1·253	18 22 4
(475s)	20 56	3 46 3 19	509·036
		5 45 3 52	
	22 24	5 20 3 19	18 21 40
(476p)		7 15 4 1	7 11 53
	23 38	+ 1·289	

At Beginning, Thermometer 69°·0.
„ End „ 68·5. Barometer 762·0 mm.
Chronometer Correction, − 1m. 10s. I. 3. S. 3.

1889, July 23. Obs. HALL, T. W.

Star.	Chronometer.	Micrometer.	Means.
°	h m s	° ′ ″	h m s
− 4·4883 (p)	17 17 53	+ 1·389	17 22 58
	19 42	192 20·20·	
(479s)	20 46	+ 1·223	r
	22 39	192 16 16	146·814
	24 11	10·10·	17 23 20
(480p)	25 19	− 1·496	
	26 50	192 11·11·	192 14 37
	27 53	− 1·488	
− 4·4903 (q)	17 32 44	− 0·543	17 37 14
	34 23	200 12 11·	
(481s)	35 27	− 0·532	108·671·
	36 48	200 9· 9·	
	37 23	22 21·	17 37 24
(482p)	38 34	+ 1·195	
	41 3	200 20·20	200 15 49
	42 13	+ 1·223	
− 4·4903 (q)	17 46 20	+ 1·311	17 51 11
	48 4	20 21 22	
(483s)	49 10	+ 1·388	109·184
	50 8	20 16·17	
	51 59	7 9	17 50 8
(484p)	53 56	− 1·188	
	54 23	20 1 2	20 11 56
	55 19	− 1·143	
− 4·4883 (p)	18 8 7	− 1·342	18 12 51
	9 26	12 18 19	
(485s)	10 38	− 1·427	144·684
	11 56	12 19 20	
	13 12	31·32	18 12 28
(486p)	14 15	+ 1·117	
	15 20	12 27·28·	12 24 18
	18 26	+ 1·020	
− 4·4883 (p)	18 21 46	+ 0·968	18 26 25
	22 53	192 30·30·	
(487s)	24 2	+ 0·981	144·160
	25 54	192 32·32·	
	27 59	29·30	18 26 43
(488p)	29 1	− 0·808	
	30 8	192 24 25	192 29 18
	30 53	− 0·820	
− 4·4903 (q)	18 34 54	− 1·319	18 38 59
	36 21	199 47·47·	
(489s)	37 22	− 1·280	111·178
	38 23	199 44 44	

Digitized by Google

1889, July 23. Obs. HALL, T. W.—*continued.*

Star.	Chronometer.	Micrometer.	Means.
	h m s	° ′ ″	h m s
— 4·4903 (q)	18 39 53	199 54 53	18 39 5
	41 1	+ 1·443	
(490p)	41 42	199 53 52·	199 49 26
	42 41	+ 1·512	

At Beginning, Thermometer 68°·0.
„ End „ 65°·0. Barometer 758·5 mm.
Chronometer Correction, — 1m. 9s. I. 3. S. 3.

1889, July 23. Obs. ELKIN, T. E.

Star.	Chronometer.	Micrometer.	Means.
°	h m s		h m s
— 4·4916 (r)	21 0 47	— 1·257	21 3 0
	1 30	— 1·146	
(491)	2 6	— 1·029	r 303·290
	2 33	— 1·051	
	3 17	+ 1·396	
	3 49	+ 1·393	
	4 42	+ 1·420	
	5 9	+ 1·436	
— 5·5036 (n)	21 10 51	+ 1·208	21 13 32
	11 35	+ 1·139	
(492)	12 13	+ 1·145	380·793
	12 45	+ 1·108	
	14 36	— 1·337	
	14 59	— 1·428	
	15 22	— 1·341	
	15 50	— 1·323	
— 5·5036 (n)	21 17 37	— 1·450	21 19 44
	17 57	— 1·410	
(493)	18 19	— 1·438	380·627·
	18 49	— 1·354	
	20 17	+ 0·584	corr. by 0·5 rev.
	20 58	+ 0·508	
	21 23	+ 1·010	
	22 33	+ 1·060	
— 4·4916 (r)	21 37 33	+ 0·950	21 39 45
	38 3	+ 0·852	
(494)	38 20	+ 0·863	304·311
	38 45	+ 1·001	
	40 21	— 0·524	
	41 9	— 0·688	
	41 40	— 0·660	
	42 9	— 0·550	

1889, July 23. Obs. ELKIN, T. E.—*continued.*

Star.	Chronometer.	Micrometer.	Means.
°	h m s		h m s
— 4·4916 (r)	21 48 7	— 0·440	21 49 25
	49 11	— 0·550	
(495)	49 58	+ 1·066	r 304·587
	50 26	+ 1·098	
— 5·5036 (n)	21 53 13	+ 0·700	21 54 8
	53 44	+ 0·700	
(496)	54 35	— 0·908	379·814·
	55 1	— 0·669	
— 5·5036 (n)	21 59 14	— 0·955	22 0 22
	59 44	— 1·057	
(497)	22 1 4	+ 0·556	379·500·
	1 28	+ 0·457	
— 4·4916 (r)	22 5 8	+ 1·314	22 5 57
	5 37	+ 1·270	
(498)	6 15	— 1·274	305·053·
	6 48	— 1·203	

At Beginning, Thermometer 64°·5.
„ End „ 62°·5. Barometer 759·0 mm.
Chronometer Correction, — 1m. 7s. I. —. S. —.

1889, July 24. Obs. ELKIN, T. W.

Star.	Chronometer.	Micrometer.	Means.
°	h m s		h m s
— 4·4883 (p)	17 18 28	+ 0·603	17 21 11
	19 35	+ 0·560	
(499)	20 9	+ 0·570	r 91·481
	20 32	+ 0·586	
	21 51	— 1·042	
	22 32	— 1·171	
	22 55	— 1·118	
	23 27	— 1·065	
— 4·4903 (q)	17 26 4	— 1·288	17 27 57
	26 38	— 1·310	
(500)	27 5	— 1·320	163·087
	27 25	— 1·190	
	28 29	+ 1·311	
	28 50	+ 1·370	
	29 21	+ 1·356	
	29 45	+ 1·420	
— 4·4903 (q)	17 31 26	+ 1·310	17 33 24
	31 56	+ 1·400	
(501)	32 26	+ 1·496	163·336·
	32 51	+ 1·422	

Digitized by Google

1889, July 24. Obs. ELKIN, T. W.—*continued.*

Star.	Chronometer.	Micrometer.	Means.
°	h m s		h m s
— 4·4903 (q)	17 33 48	— 1·163	
	34 28	— 1·040	
	34 59	— 1·098	
	35 20	— 1·031	
— 4·4883 (p)	17 37 40	— 1·320	17 39 47
	38 11	— 1·408	r
(502)	38 45	— 1·391	90·792
	39 13	— 1·344	
	40 17	+ 1·198	
	40 56	+ 1·120	
	41 24	+ 1·170	
	41 47	+ 1·143	
— 4·4883 (p)	17 50 31	+ 0·981	17 52 39
	50 52	+ 0·897	
(503)	51 43	+ 0·874	90·215·
	52 20	+ 0·940	
	52 53	— 0·648	
	53 40	— 0·774	
	54 20	— 0·748	
	54 53	— 0·660	
— 4·4903 (q)	17 57 56	— 0·607	18 0 29
	58 24	— 0·620	
(504)	58 50	— 0·586	164·485
	59 26	— 0·543	
	18 1 26	+ 1·073	
	2 5	+ 1·041	
	2 32	+ 1·045	
	3 15	+ 1·138	
— 4·4903 (q)	18 6 23	+ 1·128	18 8 45
	6 49	+ 1·144	
(505)	7 14	+ 1·151	164·736
	7 33	+ 1·131	
	8 43	— 1·378	
	9 14	— 1·429	
	11 50	— 1·432	
	12 16	— 1·371	
— 4·4883 (p)	18 15 15	— 1·126	18 17 22
	15 51	— 1·161	
(506)	16 18	— 1·232	89·264
	16 50	— 1·108	
	17 44	+ 1·463	
	18 32	+ 1·390	
	19 3	+ 1·443	
	19 25	+ 1·388	

At Beginning, Thermometer 63°·5.
„ End „ 64·0. Barometer 763·0 mm.
Chronometer Correction, — 1m. 6s. I. 3. S. 2.

1889, July 24. Obs. HALL, T. E.

Star.	Chronometer.	Micrometer.	Means.
°	h m s		h m
— 4·4916 (r)	21 12 59	+ 0·971	21 17 25
	15 10	+ 0·990	r
(507)	18 11	— 0·553	346·468·
	23 21	— 0·471	
— 5·5036 (n)	21 32 42	— 0·998	21 38 19
	37 47	— 1·037	
(508)	40 34	+ 0·528	349·543·
	42 13	+ 0·594	
— 5·5036 (n)	21 49 3	+ 1·483	21 56 8
	50 7	+ 1·500	
(509)	22 1 35	— 1·314	349·178·
	3 46	— 1·312	
— 4·4916 (r)	22 16 45	— 0·696	22 18 49
	17 48	— 0·640	
(510)	19 27	+ 1·067	348·414·
	21 17	+ 1·098	
— 4·4916 (r)	22 24 30	+ 1·145	22 26 45
	25 52	+ 1·077	
(511)	27 36	— 0·584	348·603
	29 1	— 0·432	
— 5·5036 (n)	22 41 17	— 0·770	22 43 20
	42 26	— 0·782	
(512)	44 5	+ 0·822	348·041
	45 34	+ 0·812	

At Beginning, Thermometer 59°·5.
„ End „ 58·5. Barometer 763·0 mm.
Chronometer Correction, — 1m. 4s. I. 3. S. 3.

1889, July 25. Obs. HALL, T. W.

Star.	Chronometer.	Micrometer.	Means.
	h m s	′ ″ ′ ″	h m s
Standards.	16 55 45	— 1·326	17 0 1
(513s)	57 35	3 24 2 41	r
		5 7 4 28	509·016
(514p)	17 1 23	5 39 2 47	16 59 29
		7 11 4 23	187 11 45
	4 18	+ 1·342	

Digitized by Google

1889, July 25. Obs. HALL, T. W.—*continued.*

Star.	Chronometer.	Micrometer.	Means.
°	h m s	° ′ ″	h m s
— 4·4883 (p)	17 11 15	+ 0·846	17 16 26
	12 18	+ 0·832	r 41·868
(515s)	13 20	221 47 47·	
	14 56	+ 0·809	17 16 26
(516p)	15 52	+ 0·787	221 46 37
	17 1	221 57 57	
(517s)	19 33	221 46 46	17 19 54
	20 33	— 0·952	41·724
	21 38	— 0·990	
(518p)	23 10	221 44 44	17 20 5
	24 1	— 1·057	222 20 30
	24 47	— 1·091	
— 4·4883 (p)	17 27 23	— 1·068	17 31 53
	28 28	— 1·057	41·408·
(519s)	29 16	42 1 1·	
	30 5	— 1·148	17 31 42
(520p)	30 57	— 1·153	42 24 22
	32 54	42 8 9	
	34 9	47 48	17 34 53
(521s)	35 22	+ 0·490	41·329·
	36 18	+ 0·452	
	37 20	42 42·43	17 34 47
(522p)	38 42	+ 0·498	42 25 37
	39 49	+ 0·462	
— 4·4883 (p)	17 44 12	+ 1·392	17 49 41
	45 37	+ 1·343	40·870
(523s)	48 9	223 4 4	
	48 58	+ 1·299	17 50 39
(524p)	49 58	+ 1·280	222 56 15
	52 2	223 0 0	
(525s)	53 9	222 48·48·	17 53 40
	54 0	— 1·470	40·715
	54 56	— 0·526	
(526p)	56 4	223 12·12·	17 54 3
	57 27	— 0·549	223 6 15
	58 17	— 0·600	
— 4·4883 (p)	18 3 35	— 0·552	18 7 36
	4 24	— 0·611	40·364·
(527s)	5 57	43 28 28·	
	6 51	— 0·658	18 7 53
(528p)	7 37	— 0·637	43 46 22
	8 30	43 29 30	
	9 49	44 4 5	18 10 25
(529s)	10 44	+ 0·902	40·297
	11 40	+ 0·990	
	12 23	44 13 14	18 10 26
(530p)	13 9	+ 0·951	43 51 30
	14 2	+ 0·938	

1889, July 25. Obs HALL, T. W.—*continued.*

Star.	Chronometer.	Micrometer.	Means.
°	h m s	° ′ ″	h m s
— 4·4883 (p)	18 18 13	+ 0·816	18 22 32
	19 8	+ 0·862	r 39·861
(531s)	20 14	224 31 31	
	20 57	+ 0·813	18 22 35
(532p)	21 52	+ 0·796	224 24 45
	23 45	224 21·21·	
	24 56	18·18·	18 25 12
(533s)	25 55	— 0·969	39·834·
	26 51	— 0·987	
	27 51	224 12 12	18 25 48
(534p)	28 34	— 0·980	224 16 52
	29 26	— 0·960	
		′ ″ ′ ″	
Standards.	18 34 12	— 0·785	18 37 12
(535s)	35 12	3 34 3 21	509·060
		5 46 4 14	
	36 1	6 36 3 32	18 35 36
(536p)		8 31 4 12	7 12 16
	40 13	+ 0·845	

At Beginning, Thermometer 63°·5.
„ End „ 61·5. Barometer 766·0 mm.
Chronometer Correction, — 1m. 2s. I. 3–2. S. 3–2.

1889, July 25. Obs. ELKIN, T. E.

Star.	Chronometer.	Micrometer.	Means.
	h m s	′ ″ ′ ″	h m s
Standards.	20 35 41	+ 1·363	20 37 53
(537s)	36 32	3 46 4 29	r 509·133
		4 47 4 18	
	38 38	3 24 4 30	20 37 35
(538p)		4 27 4 8	7 9 44
	40 5	— 1·230	
°		° ′ ″	
— 4·4883 (p)	20 42 46	— 0·863	20 45 29
	43 43	50 50 50	
(539s)	44 23	— 0·815	35·860·
	45 1	50 31 32	
	45 49	49 49	20 45 29
(540p)	46 22	+ 0·702	
	47 23	50 58 59	50 47 15
	48 25	+ 0·697	
— 4·4883 (p)	20 49 41	+ 0·694	20 52 39
	50 24	231 11 11	
(541s)	50 58	+ 0·618	35·672
	51 36	231 24 24	
	53 25	19 19	20 52 37
(542p)	54 9	— 0·940	
	55 8	231 1 1	231 13 45
	55 48	— 1·028	

Digitized by Google

1889, July 25. Obs. ELKIN, T. E.—*continued.*

Star.	Chronometer.	Micrometer.	Means.
°	h m s	° ′ ″	h m s
— 4·4883 (p)	20 56 58	— 1·049 ·	21 1 1
	57 55	51 32 32·	
(543s)	59 30	— 1·022	r 35·444·
	21 0 21	51 26 27	
	2 20	33 34	21 1 10
(544p)	2 48	+ 1·450	
	4 3	51 48 49	51 35 11
	4 47	+ 1·510	
— 4·4883 (p)	21 6 26	+ 1·452	21 9 27
	7 10	231 55 55	
(545s)	7 47	+ 1·406	35·243
	9 3	232 6 6	
	9 53	12 13	21 9 30
(546p)	10 39	— 1·119	
	11 54	231 57 57	232 2 37
	12 56	— 1·253	
— 4·4883 (p)	21 13 49	— 1·282	21 17 12
	14 37	52 24 25	
(547s)	15 58	— 1·262	35·038·
	16 47	52 15 16	
	18 18	21 22	21 17 21
(548p)	18 45	+ 1·259	
	19 44	52 32 34	52 23 37
	20 17	+ 1·362	
— 4·4883 (p)	21 21 11	+ 1·291	21 23 44
	21 59	232 47 47	
(549s)	22 28	+ 1·228	34·908·
	23 39	232 48 48	
	24 32	233 0 0·	21 23 58
(550p)	25 3	— 1·306	
	25 44	232 49 49	232 51 3
	26 14	— 1·396	
		′ ″ ′ ″	
Standards.	21 29 2	— 1·298	21 31 12
	29 38	5 34 4 24	
(551s)		5 41 4 12	509·000
	31 36	5 40 4 30	21 30 37
(552p)		5 46 4 10	
	33 22	+ 1·298	187 11 21

At Beginning, Thermometer 60·5°.
„ End „ 60·5°. Barometer 766·0 mm.
Chronometer Correction, — 1m. 0s. I. 3. S. 3.

1889, August 2. Obs. ELKIN, T. W.

Star.	Chronometer.	Micrometer.	Means.
°	h m s	° ′ ″	h m s
— 4·4855 (k)	19 20 11	+ 1·208	19 22 54
	21 35	+ 1·264	
(553s)	22 24	284 28·29	r 63·039·
	23 23	28·29	19 22 53
(554p)	24 6	— 1·200	
	25 45	— 1·193	284 28 45
— 5·5021 (i)	19 27 41	— 1·387	19 29 47
	28 38	— 1·416	
(555s)	29 21	268 42 42·	72·788·
	30 18	46 46·	19 29 49
(556p)	31 10	+ 1·226	
	31 41	+ 1·154	268 44 15
— 5·5021 (i)	19 33 47	+ 1·118	19 36 3
	34 40	+ 1·199	
(557s)	35 31	88 29·29·	72·724
	36 40	23 23	19 36 5
(558p)	37 35	— 1·449	
	38 11	— 1·420	88 26 15
— 4·4855 (k)	19 40 20	— 1·171	19 42 16
	41 5	— 1·086	
(559s)	41 58	104 58 58	63·374·
	42 47	105 10 10	19 42 22·
(560p)	43 31	+ 1·467	
	44 10	+ 1·439	105 4 0
		T. E.	
— 4·4855 (k)	19 50 11	+ 0·558	19 53 31
	51 6	+ 0·535	
(561s)	52 32	105 23 23·	63·550
	54 0	23 23·	19 53 16
(562p)	56 1	— 0·970	
	56 48	— 1·023	105 23 15
— 5·5021 (i)	19 59 30	— 0·446	20 3 44
	20 1 57	— 0·540	
(563s)	3 42	87 48 48·	72·601
	5 10	47·48	20 4 26
(564p)	6 22	+ 1·158	
	7 8	+ 1·030	87 48 0
— 5·5021 (i)	20 8 23	+ 0·970	20 11 2
	9 16	+ 1·118	
(565s)	10 28	267 29·30	72·544
	11 29	32 33	20 10 58
(566p)	12 27	— 0·562	
	14 1	— 0·438	267 31 7
— 4·4855 (k)	20 15 30	— 0·930	20 17 59
	16 27	— 0·834	
(567s)	17 52	285 51 52	63·976·

Digitized by Google

1889, August 2. Obs. ELKIN, T. E.—*continued.*

Star.	Chronometer.	Micrometer.	Means.
°	h m s	° ′ ″	h m s
— 4·4855 (k)	20 18 45	286 4 5	20 18 18
(568p)	19 35	+ 0·750	
	20 25	+ 0·767	285 58 0

At Beginning, Thermometer 72°·5.
„ End „ 70·5. Barometer 765·0 mm.
Chronometer Correction, — 0m. 16s. I. 3–4. S. 3.

1889, August 3. Obs. ELKIN, T. E.

Star.	Chronometer.	Micrometer.	Means.
°	h m s	° ′ ″	h m s
— 4·4846 (h)	20 3 54	— 0·543	20 14 44
	5 10	— 0·617	
(569s)	9 48	234 24 24·	r 84·265
	22 13	31 31·	
	23 3	26·27	20 19 44
(570p)	23 53	11 11	
	24 28	+ 0·820	234 23 19
	25 24	+ 0·870	
— 5·5021 (i)	20 26 55	+ 1·070	20 29 40
	27 32	+ 1·054	
(571s)	28 29	234 8· 8·	78·552
	29 10	11 11	
	29 59	11 11	20 29 38
(572p)	30 54	0 0·	
	31 37	— 0·520	234 7 41
	32 38	— 0·500	
— 5·5021 (i)	20 33 56	— 0·490	20 37 26
	35 14	— 0·515	
(573s)	36 7	53 60 60	78·607
	36 56	54 55	
	38 10	58 58·	20 37 30
(574p)	38 46	52 52·	
	39 27	+ 1·069	53 56 15
	41 6	+ 1·150	
— 4·4846 (h)	20 42 4	+ 0·725	20 49 36
	49 30	+ 0·711	
(575s)	50 21	54 57 57·	83·814
	51 1	59·59·	
	51 43	60 60·	20 51 22
(576p)	52 22	57 57·	
	53 4	— 0·925	54 58 34
	53 45	— 0·883	

At Beginning, Thermometer 68°·5.
„ End „ 68·5. Barometer 762·5 mm.
Chronometer Correction, — 0m. 14s. I. — S. —.

1889, August 3. Obs. HALL, T. E.

Star.	Chronometer.	Micrometer.	Means.
°	h m s	° ′ ″	h m s
— 4·4846 (h)	21 2 47	— 0·931	21 7 46
	3 38	55 0· 0·	
(577s)	5 23	— 1·043	r 83·630
	6 50	55 18 19	
	8 15	26 27	21 7 42
(578p)	9 32	+ 0·643	
	12 7	55 35 36	55 20 15
	13 22	+ 0·591	
— 5·5021 (i)	21 17 27	+ 1·418	21 25 29
	19 54	53 1 1·	
(579s)	21 23	+ 1·500	79·316
	22 30	53 2 2·	
	28 25	52 42·43	21 25 37
(580p)	30 0	— 1·126	
	31 41	52 32 32·	52 49 38
	33 5	— 1·160	
— 5·5021 (i)	21 37 7	— 1·080	21 42 37
	39 28	232 32 32	
(581s)	40 36	— 1·121	79·520
	41 39	232 30·30·	
	43 17	35 35	21 42 28
(582p)	45 4	+ 0·598	
	46 10	232 39·39·	232 34 15
	47 41	+ 0·643	
— 4·4846 (h)	21 51 41	+ 1·372	21 55 49
	52 56	236 26 26·	
(583s)	53 51	+ 1·391	83·007·
	54 47	236 21 21	
	56 2	4 4	21 55 39
(584p)	57 37	— 1·340	
	58 52	236 10 10	236 15 18
	60 8	— 1·408	
— 4·4846 (h)	22 5 2	— 1·442	22 10 6
	6 18	56 19·20	
(585s)	7 19	— 1·431	82·868·
	8 50	56 22·22·	
	10 36	37 38	22 10 6
(586p)	12 15	+ 1·307	
	14 39	56 39 40	56 29 48
	15 47	+ 1·303	

Wire of driving clock broke.

At Beginning, Thermometer —°
„ End „ 67·0. Barometer 762·5 mm.
Chronometer Correction, — 0m. 10s. I. 3 S. 3.

Digitized by Google

1889, August 5. Obs. ELKIN, T. W.

Star.	Chronometer.	Micrometer.	Means.
°	h m s	° ′ ″	h m s
— 4·4843 (g)	17 48 29	+ 0·987	17 50 27
	49 23	+ 0·983	r 54·435
(587s)	50 0	62 30 31	
	50 41	18 19	17 50 20
(588p)	51 39	— 0·568	62 24 30
	52 19	— 0·540	
— 4·4843 (g)	17 53 38	— 0·562	17 55 15
	54 9	— 0·606	54·432·
(589s)	55 1	242 40 40·	
	55 48	37 37	17 55 24
	56 19	+ 1·050	242 38 37
(590p)	56 53	+ 0·983	
— 4·4843 (g)	17 57 57	+ 0·980	17 59 23
	58 26	+ 1·007	54·446
(591s)	59 1	242 46 46·	
	59 47	40 40·	17 59 24
	18 0 11	— 0·543	242 43 15
(592p)	0 59	— 0·552	
— 4·4843 (g)	18 2 27	— 0·659	18 4 5
	3 0	— 0·556	54·401·
(593s)	3 42	62 53 54	
	4 35	49 49·	18 4 8
	5 13	+ 0·987	62 51 22
(594p)	5 39	+ 1·031	
		′ ″ ′ ″	
Standards.	18 8 40	+ 1·275	18 10 50
	9 43	9 47 6 52	509·005
(595s)		8 50 4 42	
	11 46	8 7 7 0	18 10 44
		7 13 4 40	7 12 40
(596p)	13 1	— 1·270	
°		° ′	
— 4·4843 (g)	18 15 29	— 0·648	18 17 16
	16 9	— 0·602	54·345·
(597s)	16 49	63 19·20	
	17 35	18 18·	18 17 12
	18 13	+ 0·951	63 19 0
(598p)	19 13	+ 0·996	
— 4·4843 (g)	18 20 24	+ 0·928	18 22 30
	21 54	+ 0·972	54·316·
(599s)	22 31	243 13 13	
	23 4	29 29·	18 22 47
	23 37	— 0·627	243 21 7
(600p)	24 6	— 0·640	

1889, August 5. Obs. ELKIN, T. W.—*continued.*

Star.	Chronometer.	Micrometer.	Means.
	h m s	° ′ ″	h m
— 4·4843 (g)	18 24 43	— 0·611	18 26 12
	25 16	— 0·660	r 54·269·
(601s)	25 48	243 34 34	
	26 36	31 31	18 26 12
(602p)	27 8	+ 0·920	243 32 30
	27 40	+ 0·890	
— 4·4843 (g)	18 28 42	+ 0·930	18 30 27
	29 22	+ 0·967	54·227
(603s)	30 20	63 41 41·	
	30 59	39 40·	18 30 39
(604p)	31 32	— 0·751	63 40 37
	32 13	— 0·692	
		′ ″ ′ ″	
Standards.	18 34 56	— 1·326	18 37 0
(605s)	35 47	9 12 6 38	508·905
		7 4 4 33	
	37 34	8 45 6 38	18 36 40
(606p)		6 40 4 27	187 12 19
	39 5	+ 1·231	

At Beginning, Thermometer 63°·5.
„ End „ 62·5. Barometer 756·0 mm.
Chronometer Correction, — 0m. 7s. I. 3. S. 3.

1889, August 7. Obs. ELKIN, T. W.

Star.	Chronometer.	Micrometer.	Means.
°	h m s	° ′ ″	h m s
— 5·5006 (f)	17 12 13	+ 0·431	17 15 18
	12 53	314 14 15	
(607s)	13 27	+ 0·350	r 15·159·
	14 13	314 26 27	
	15 30	19 20	17 15 1
(608p)	16 13	— 1·170	314 4 30
	17 27	313 17 18	
	19 21	— 1·292	
— 5·5006 (f)	17 20 36	— 1·283	17 23 28
	21 28	133 43 44	
(609s)	22 41	— 1·307	14·999
	23 41	133 28 29	
	24 6	31 32	17 23 39
(610p)	24 42	+ 1·270	
	25 21	133 49 50·	133 38 19
	25 55	+ 1·318	
— 5·5006 (f)	17 27 13	+ 1·243	17 29 36
	27 58	313 32 33	
(611s)	28 34	+ 1·230	14·858
	29 27	313 39 39	

Digitized by Google

1889, August 7. Obs. ELKIN, T. W.—*continued.*

Star.	Chronometer.	Micrometer.	Means.
°	h m s	° ′ ″	h m s
— 5·5006 (f)	17 30 9	313 20 21·	17 29 45
	30 36	— 1·367	313 20 56
(612p)	31 26	312 51 52	
	32 0	— 1·390	
— 5·5006 (f)	17 43 30	— 0·580	17 46 9
	44 39	132 44 44·	r
(613s)	45 11	— 0·565	14·459·
	46 13	131 40 40	
	46 54	132 11 12	17 46 25
	47 21	+ 1·004	132 18 3
(614p)	47 56	132 36 37	
	48 35	+ 1·060	
— 5·5006 (f)	17 49 51	+ 1·026	17 52 0
	50 26	312 21 22	
(615s)	51 17	+ 0·924	14·324
	51 48	312 19 19·	
	52 16	6 7·	17 52 2
	52 39	— 0·632	
(616p)	53 37	311 39 40·	312 6 52
	54 13	— 0·670	
— 5·5006 (f)	17 54 55	— 0·674	17 57 24
	55 31	132 4 4·	
(617s)	56 4	— 0·640	14·215·
	57 4	131 29·30	
	57 36	49·49·	17 57 19
	58 19	+ 0·883	
(618p)	59 4	132 25 25	131 57 7
	18 0 19	+ 0·862	

At Beginning, Thermometer 66°·5.
„ End „ 64·5. Barometer 765·5 mm.
Chronometer Correction, — 0m. 4s. I. 3. S. 2-3.
Stars faint; moonlight.

1889, August 7. Obs. ELKIN, T. E.

Star.	Chronometer.	Micrometer.	Means.
°	h m s	° ′ ″	h m s
— 5·5006 (f)	20 51 30	— 0·661	20 54 37
(619s)	53 39	— 0·630	r
	54 26	118 12 13	10·263
	55 8	41 42·	
(620p)	56 4	+ 0·920	20 54 47
	57 16	+ 0·897	118 27 7

1889, August 7. Obs. ELKIN, T. E.—*continued.*

Star.	Chronometer.	Micrometer.	Means.
°	h m s	° ′ ″	h m s
— 5·5006 (f)	20 58 5	+ 0·862	21 0 56
	59 2	+ 0·952	r
(621s)	59 54	297 54 55	10·177·
	21 0 30	20 21	
(622p)	2 33	— 0·729	21 0 12
	4 3	— 0·730	297 37 30
— 5·5006 (f)	21 5 24	— 0·750	21 11 57
	5 53	— 0·818	9·918·
(623s)	8 12	296 50 51	
	16 48	45 46	21 12 30
(624p)	17 58	+ 0·745	296 48 0
	18 33	+ 0·660	
— 5·5006 (f)	21 19 17	+ 0·668	21 20 51
	20 2	+ 0·761	9·763·
(625s)	20 35	116 5 6	
	21 13	115 22 23	21 20 54
(626p)	21 52	— 0·954	115 44 0
	22 15	— 0·948	
— 5·5006 (f)	21 22 40	— 0·910	21 24 9
	23 13	— 0·980	9·688
(627s)	23 44	115 54 55	
	24 34	116 21 22	21 24 9
(628p)	25 8	+ 0·633	116 8 0
	25 37	+ 0·630	
— 5·5006 (f)	21 26 36	+ 0·610	21 28 42
	27 45	+ 0·636	9·642·
(629s)	28 23	295 9 10	
	29 9	294 21 22	21 28 46
(630p)	29 52	— 0·981	294 45 30
	30 35	— 0·980	

At Beginning, Thermometer 60°·5.
„ End „ 60·5. Barometer 766·0 mm.
Chronometer Correction, — 0m. 3s. I. —. S. —.

1889, August 8. Obs. ELKIN, T. E.

Star.	Chronometer.	Micrometer.	Means.
°	h m s	° ′ ″	h m s
— 5·5006 (f)	20 13 43	— 0·634	20 16 9
(631s)	15 7	352 2 3	r
	16 20	351 53 54	26·386
	17 11	352 6 7	
(632p)	17 54	14 15	20 16 39
	18 35	+ 1·020	352 4 15

Digitized by Google

1889, August 8. Obs. ELKIN, T. E.—*continued.*

Star.	Chronometer.	Micrometer.	Means.
°	h m s	° ′ ″	h m s
− 5·5006 (f)	20 20 12	+ 1·018	20 22 35
(6338)	21 20	172 4 5	r 26·538
	22 28	9 10	
	23 28	171 53 54	20 22 52
(634p)	24 13	40 41	171 57 0
	24 58	− 1·480	
− 5·5006 (f)	20 25 43	− 1·479	20 28 11
	26 41	171 43·44	26·671
(635s)	27 36	41 42	
	28 35	56 57	20 28 6
(636p)	29 31	172 11 12	171 53 19
	30 39	+ 1·150	
− 5·5006 (f)	20 31 35	+ 1·162	20 34 6
	32 18	351 57 58	26·841
(637s)	32 56	60 60·	
	34 2	50 50	20 33 37
(638p)	35 12	30 31	151 49 34
	36 38	− 1·321	
		′ ″ ′ ″	
Standards.	20 39 8	− 1·284	20 40 59
	39 36	7 24 8 21	508·990
(639s)		2 54 2 18	
	41 35	8 21 8 14	20 40 35
(640p)		3 51 2 16	7 10 20
	42 51	+ 1·274	
Standards.	20 44 41	+ 1·268	20 46 27
(641s)	45 13	9 46 8 32	508·980
		3 42 2 16	
	47 9	9 10 8 40	20 46 11
(642p)		3 2 2 19	187 10 58
	48 14	− 1·288	

°
At Beginning, Thermometer 62·0.
„ End, „ 61·5. Barometer 766·5 mm.
Chronometer Correction, − 0m. 2s. I 2-3. S. 3.
Strong moonlight; stars faint.

1889, August 10. Obs. ELKIN, T. W.

Star.	Chronometer	Micrometer.	Means.
°	h m s	° ′ ″	h m s
− 5·5006 (f)	18 11 39	+ 1·050	18 13 50
(643s)	12 41	159 19 19	r 86·549
	13 34	21 21·	
	14 43	21 21	18 14 7
(644p)	15 29	17 17·	159 19 37
	16 2	− 0·501	

1889, August 10. Obs. ELKIN, T. W.—*continued.*

Star.	Chronometer.	Micrometer.	Means.
°	h m s	° ′ ″	h m s
− 5·4992 (e)	18 18 52	− 0·885	18 21 5
(645s)	19 54	134 7 7·	r 103·782
	20 36	7· 8	
	21 21	8 8	18 21 2
(646p)	22 15	7· 8	134 7 41
	23 19	+ 0·667	
− 5·4992 (e)	18 24 54	+ 0·638	18 26 44
	25 48	314 8 9	103·697
(647s)	26 39	3 4	
	27 25	1· 2·	18 26 58
(648p)	27 59	7 7·	314 5 19
	28 35	− 0·941	
− 5·5006 (f)	18 30 57	− 1·380	18 33 28
	32 55	339 19·21	86·940
(649s)	33 34	11 12	
	34 50	17 18	18 34 12
(650p)	35 31	22 23·	339 18 0
	36 0	+ 1·320	
− 5·5006 (f)	18 40 14	+ 1·354	18 41 51
	40 48	159 19 19·	87·154
(651s)	41 24	21·21·	
	42 9	19·19·	18 41 44
(652p)	42 37	14 14·	159 18 37
	43 29	− 1·200	
− 5·4992 (e)	18 44 58	− 1·191	18 46 27
	45 36	133 59·60·	103·150
(653s)	46 8	134 3· 4	
	46 54	1· 2	18 46 32
(654p)	47 29	4· 5	134 2 34
	47 56	+ 1·341	
− 5·4992 (e)	18 49 58	+ 1·350	18 52 5
	50 50	313 57 58	103·080
(655s)	51 37	59 60·	
	52 44	58 58·	18 52 6
(656p)	53 15	60·61·	313 59 7
	54 13	− 1·270	
− 5·5006 (f)	18 57 33	− 0·992	18 59 4
	58 28	339 12 13	87·656
(657s)	59 7	11 12·	
	59 39	19 20·	18 59 19
(658p)	19 0 2	19 21	339 16 0
	0 35	+ 0·648	

°
At Beginning, Thermometer 68·5.
„ End, „ 68·5. Barometer 760·0 mm.
Chronometer Correction, − 0m. 2s. I. —. S. —.

Digitized by Google

1889, August 11. Obs. ELKIN, T. W.

Star.	Chronometer.	Micrometer.	Means.
°	h m s	° ′ ″	h m s
— 5·5006 (f)	17 23 32	— 1·490	17 25 14
	24 26	156 56 56	r 114·670
(659s)	24 53	50 49·	
	25 41	51·51·	17 25 18
(660p)	26 14	51·51	156 52 7
	26 57	+ 1·160	
— 5·4992 (e)	17 31 41	+ 1·120	17 33 33
	32 53	128 37·38	76·637
(661s)	33 25	30 30·	
	34 22	35 35	17 33 53
(662p)	34 53	34·35	128 34 26
	35 25	— 1·483	
— 5·4992 (e)	17 36 39	— 1·485	17 38 25
	37 22	308 29·30·	76·547
(663s)	38 5	34 34·	
	38 52	34·35	17 28 29
(664p)	39 38	27 27·	308 31 33
	40 12	+ 1·032	
— 5·5006 (f)	17 42 1	+ 1·338	17 43 52
	43 12	335 51 52	115·107
(665s)	43 53	51 52	
	44 38	49·50·	17 44 14
(666p)	45 14	48 48·	335 50 19
	45 43	— 1·221	
— 5·5006 (f)	17 53 14	— 1·204	17 54 42
	53 58	156 55 55	115·301
(667s)	54 31	49·50·	
	55 1	48 48	17 54 46
(668p)	55 34	51 51·	156 51 3
	56 10	+ 0·507	
— 5·4992 (e)	17 58 13	+ 0·845	17 59 45
	58 46	128 22·23	76·077
(669s)	59 35	20·21	
	18 0 9	26 26	17 59 50
(670p)	0 48	28 28	128 24 22
	1 17	— 0·768	
— 5·4992 (e)	18 2 18	— 0·759	18 3 59
	3 6	308 19 20·	76·001
(671s)	3 58	22 23	
	4 38	21·22	18 4 14
(672p)	5 13	19 20	308 20 52
	5 41	+ 0·760	

1889, August 11. Obs. ELKIN, T. W.—*continued.*

Star.	Chronometer.	Micrometer.	Means.
°	h m s	° ′ ″	h m s
— 5·5006 (f)	18 7 48	+ 0·636	18 9 12
	8 21	336 48·49·	r 115·660
(673s)	9 8	52 53	
	9 39	48 48·	18 9 18
(674p)	10 10	45 46	336 48 48
	10 36	— 0·976	

At Beginning. Thermometer 62°·5.
„ End „ 61°·0. Barometer 762·5 mm.
Chronometer Correction, — 0m. 1s. I. 3. S. 3.

1889, August 16. Obs. ELKIN, T. W.

Star.	Chronometer.	Micrometer.	Means.
°	h m s	° ′ ″	h m s
— 5·4992 (e)	17 33 20	— 0·850	17 35 33
	34 17	151 3 3	r 49·901
(675s)	35 31	15 15·	
	36 23	7 7	17 35 47
(676p)	36 57	1 1·	151 6 37
	37 46	+ 0·751	
— 5·4992 (e)	17 39 7	+ 0·760	17 40 56
	40 7	331 12 13·	49·972
(677s)	40 48	7 8	
	41 30	0 1	17 41 7
(678p)	42 2	2 2·	331 5 45
	42 46	— 0·788	
— 5·4992 (e)	17 43 46	— 0·769	17 45 12
	44 20	150 59·60	50·051
(679s)	45 3	151 5· 6	
	45 36	6· 6·	17 45 17
(680p)	46 8	0 0·	151 3 4
	46 38	+ 0·820	
— 5·4992 (e)	17 47 44	+ 0·792	17 49 29
	48 49	331 2· 3	50·100
(681s)	49 21	330 59·60·	
	50 17	53 54	17 49 48
(682p)	50 48	331 2· 3·	330 59 45
	51 15	— 0·692	
		′ ″ ′ ″	
Standards.	17 54 38	— 1·307	17 56 36
	55 26	6 29 5 24	508·995
(683s)		5 27 2 58	
	57 1	8 1 5 27	17 56 13
(684p)		6 42 4 29	7 12 5
	58 35	+ 1·302	

Digitized by Google

1889, August 16. Obs. ELKIN, T. W.—*continued.*

Star.	Chronometer.	Micrometer.	Means.
	h m s	′ ″ ′ ″	h m s
Standards.	18 0 5	+ 1·302	18 1 40
(68$_{56}$)	0 45	7 3 5 39	r 508·961
		4 23 2 48	
(686p)	2 6	7 28 5 39	18 1 25
		4 35 2 42	187 11 40
	3 15	− 1·341	

At Beginning, Thermometer 63°·5.
„ End „ 62·5. Barometer 762·0 mm.
Chronometer Correction, + 0m. 2s. I. 3. S. 3.

1889, August 16. Obs. ELKIN, T. E.

Star.	Chronometer.	Micrometer.	Means.
°	h m s	° ′ ′	h m s
− 5·4992 (e)	21 7 11	− 1·182	21 9 38
	7 44	− 1·170	
(687s)	8 23	149 47 48	33·218·
	9 28	41 41	
	10 12	41 41·	21 9 42
(688p)	10 46	43 44	
	11 32	+ 1·404	149 43 19
	12 5	+ 1·385	
− 5·4992 (e)	21 13 32	+ 1·437	21 15 58
	14 5	+ 1·440	
(689s)	14 55	329 44 45·	33·369·
	15 36	42 44	
	16 18	29 31	21 16 1
(690p)	17 17	35 37	
	17 54	− 1·060	329 38 26
	18 22	− 1·078	
− 5·4992 (e)	21 19 2	− 1·120	21 22 1
	19 31	− 1·070	
(691s)	20 53	149 39 39·	33·445·
	22 1	39·40	
	23 1	38·39	21 22 25
(692p)	23 43	33 34	
	24 24	+ 0·558	149 37 52
	25 8	+ 0·523	
− 5·4992 (e)	21 26 58	+ 0·521	21 29 3
	27 32	+ 0·558	
(693s)	28 15	329 33 35	33·516·
	28 44	32 34	
	29 33	39 41	21 29 10
(694p)	30 9	32 33·	
	30 36	− 1·029	329 34 56
	31 6	− 1·017	

1889, August 16. Obs. ELKIN, T. E.—*continued.*

Star.	Chronometer.	Micrometer.	Means.
	h m s	′ ″ ′ ″	h m s
Standards.	21 33 35	− 1·292	21 35 4
(695s)	34 8	5 10 5 34	r 509·016
		4 0 3 20	
	35 38	5 51 5 39	21 34 53
(696p)		4 38 2 48	7 10 34
	36 34	+ 1·308	
Standards.	21 37 35	+ 1·271	21 39 8
(697s)	38 12	7 7 5 40	509·000
		4 30 2 50	
	39 30	5 21 5 33	21 38 51
(698p)		2 53 2 44	187 10 45
	40 41	− 1·271	

At Beginning, Thermometer 58°·5.
„ End „ 58·5. Barometer 761·0 mm.
Chronometer Correction, + 0m. 6s. I. 2–3. S. 3.

1889, August 17. Obs. ELKIN, T. W.

Star.	Chronometer.	Micrometer.	Means.
°	h m s		h m s
− 5·4985 (c)	17 58 4	− 0·838	17 59 7
	58 42	− 0·795	
(699)	59 29	+ 0·778	r 113·949·
	18 0 13	+ 0·754	
− 5·4989 (d)	18 2 3	+ 0·600	18 3 2
	2 31	+ 0·580	
(700)	3 35	− 1·014	117·550·
	4 0	− 1·065	
− 5·4989 (d)	18 4 51	− 1·048	18 5 40
	5 21	− 1·010	
(701)	5 57	+ 1·457	117·439·
	6 29	+ 1·480	
− 5·4985 (c)	18 8 0	+ 0·770	18 8 57
	8 36	+ 0·821	
(702)	9 16	− 0·800	114·977·
	9 56	− 0·836	
− 5·4985 (c)	18 11 51	− 0·814	18 12 55
	12 19	− 0·760	
(703)	13 33	+ 0·744	114·002
	13 59	+ 0·834	
− 5·4989 (d)	18 16 26	+ 1·460	18 17 12
	16 55	+ 1·430	
(704)	17 27	− 1·106	117·324
	17 59	− 1·136	

Digitized by Google

1889, August 17. Obs. ELKIN, T. W.—*continued.*

Star.	Chronometer.	Micrometer.	Means.
°	h m		h m s
— 5·4989 (d)	18 19 25	— 1·180	18 20 7
	19 48	— 1·167	
(705)	20 17	+ 1·394	r 117·203·
	21 0	+ 1·360	
— 5·4985 (c)	18 23 17	+ 0·792	18 24 4
	23 50	+ 0·904	
(706)	24 22	— 0·757	114·041
	24 48	— 0·857	
— 5·4985 (c)	18 26 1	— 0·772	18 27 25
	27 21	— 0·833	
(707)	27 55	+ 0·874	114·082
	28 22	+ 0·895	
— 5·4989 (d)	18 29 54	+ 1·430	18 30 26
	30 11	+ 1·430	
(708)	30 40	— 1·142	117·233
	31 1	— 1·252	
— 5·4989 (d)	18 32 9	— 1·191	18 32 51
	32 30	— 1·217	
(709)	33 3	+ 1·408	117·213
	33 42	+ 1·416	
— 5·4985 (c)	18 35 27	+ 0·862	18 36 5
	35 49	+ 0·880	
(710)	36 17	— 0·710	114·161
	36 47	— 0·710	

At Beginning, Thermometer 63°·5.
„ End „ 63°·0. Barometer 763·5 mm.
Chronometer Correction, + 0m. 4s. I. 2–3. S. 2–3.

1889, August 17. Obs. ELKIN, T. E.

Star.	Chronometer.	Micrometer.	Means.
°	h m s		h m s
— 5·5056 (f)	20 50 23	— 0·850	20 51 43
	51 21	— 0·906	
(711)	52 10	+ 0·620	r 257·778·
	52 58	+ 0·693	
— 6·5151 (a)	20 55 40	+ 1·063	20 56 48
	56 32	+ 1·143	
(712)	57 15	— 1·400	274·668·
	57 45	— 1·469	
— 6·5151 (a)	21 0 1	— 1·410	21 1 9
	0 40	— 1·368	
(713)	1 42	+ 1·084	274·668
	2 15	+ 1·030	

1889, August 17. Obs. ELKIN, T. E.—*continued.*

Star.	Chronometer.	Micrometer.	Means.
°	h m s		h m s
— 5·5006 (f)	21 4 39	+ 0·798	21 5 35
	5 7	+ 0·749	
(714)	5 55	— 0·843	r 258·012
	6 39	— 0·680	
— 5·5006 (f)	21 8 33	— 0·750	21 9 19
	8 59	— 0·771	
(715)	9 39	+ 0·732	258·039
	10 4	+ 0·867	
— 6·5151 (a)	21 12 27	+ 0·978	21 13 16
	12 51	+ 1·068	
(716)	13 36	— 0·540	274·499·
	14 11	— 0·607	
— 6·5151 (a)	21 16 3	— 0·571	21 17 6
	16 33	— 0·550	
(717)	17 38	+ 0·960	274·363·
	18 9	+ 0·888	
— 5·5006 (f)	21 21 39	+ 0·930	21 22 31
	22 6	+ 0·889	
(718)	22 48	— 0·720	258·242·
	23 30	— 0·614	

At Beginning, Thermometer 61°·0.
„ End, „ 60°·5. Barometer 763·0 mm.
Chronometer Correction, + 0m. 4s. I. 3. S. 3, hazy.

1889, August 18. Obs. ELKIN, T. W.

Star.	Chronometer.	Micrometer.	Means.
°	h m s		h m s
— 5·4985 (c)	18 3 33	+ 0·532	18 4 38
	4 11	+ 1·467	
(719)	5 2	— 1·201	127·332
	5 48	— 1·134	
— 5·4989 (d)	18 8 19	— 0·814	18 9 28
	9 7	— 0·797	
(720)	9 53	+ 0·769	101·940
	10 34	+ 0·722	
— 5·4989 (d)	18 11 54	+ 0·809	18 12 42
	12 29	+ 0·768	
(721)	12 56	— 0·810	101·950
	13 29	— 0·867	

Digitized by Google

1889, August 18. Obs. ELKIN, T. W.—*continued.*

Star.	Chronometer.	Micrometer.	Means.
°	h m s		h m s
− 5·4985 (c)	18 16 7	− 1·050	18 16 57
	16 38	− 1·116	
(722)	17 19	+ 0·503	r 127·421
	17 46	+ 0·505	
− 5·4985 (c)	18 19 28	+ 0·518	18 20 18
	19 54	+ 0·503	
(723)	20 38	− 1·062	127·449
	21 12	− 1·060	
− 5·4989 (d)	18 23 28	− 0·902	18 24 15
	23 58	− 0·880	
(724)	24 35	+ 0·780	101·838
	25 0	+ 0·678	
− 5·4989 (d)	18 26 33	+ 0·665	18 27 31
	27 13	+ 0·800	
(725)	27 48	− 0·890	101·810
	28 31	− 0·955	
− 5·4985 (c)	18 30 11	− 0·988	18 30 56
	30 37	− 0·960	
(726)	31 13	+ 0·557	127·600
	31 42	+ 0·592	

At Beginning, Thermometer 65°·5.
„ End, „ 63°·0. Barometer 763·5 mm.
Chronometer Correction, + 0m. 4s. I. 2–3. S. 3.

1889, August 21. Obs. ELKIN, T. E.—*continued.*

Star.	Chronometer.	Micrometer.	Means.
°	h m s		h m s
− 5·4992 (e)	21 0 24	+ 1·066	21 1 17
	0 56	+ 1·003	
(730)	1 36	− 0·541	r 142·520
	2 14	− 0·488	
− 5·4992 (e)	21 3 55	− 0·500	21 4 59
	4 33	− 0·490	
(731)	5 17	+ 1·016	142·541
	6 13	+ 1·057	
− 6·5158 (b)	21 8 16	+ 0·861	21 9 5
	8 50	+ 0·906	
(732)	9 23	− 0·592	208·234
	9 53	− 0·707	
− 6·5158 (b)	21 11 25	− 0·738	21 12 23
	11 52	− 0·686	
(733)	12 53	+ 0·940	208·201
	13 21	+ 0·886	
− 5·4992 (e)	21 15 53	+ 1·161	21 16 42
	16 22	+ 1·128	
(734)	17 2	− 1·449	142·704
	17 33	− 1·432	

At Beginning, Thermometer 70°·5.
„ End. „ 70°·5. Barometer 759·5 mm.
Chronometer Correction, + 0m. 2s. I. 2–3. S. 2–3.

1889, August 21. Obs. ELKIN, T. E.

Star.	Chronometer.	Micrometer.	Means.
°	h m s		h m s
− 5·4992 (e)	20 47 45	− 0·562	20 49 45
	48 45	− 0·573	
(727)	49 44	+ 0·968	142·422
	50 45	+ 1·011	
− 6·5158 (b)	20 52 53	+ 0·931	20 54 2
	53 36	+ 1·041	
(728)	54 29	− 0·580	208·375
	55 10	− 0·641	
− 6·5158 (b)	20 56 38	− 0·658	20 57 29
	57 3	− 0·560	
(729)	57 54	+ 0·977	208·321
	58 20	+ 0·883	

1889, August 22. Obs. ELKIN, T. E.

Star.	Chronometer.	Micrometer.	Means.
°	h m s	° ′ ″	h m s
− 5·4989 (d)	21 9 8	− 0·719	21 12 10
	10 31	17 33 35	
(735s)	11 35	34 36	r 46·109
	12 37	32 35	21 12 21
	14 41	21·24	
(736p)	15 12	+ 0·828	17 31 22
− 5·4989 (d)	21 16 5	+ 0·750	21 19 2
	17 55	197 33 34	
(737s)	19 20	29 29	46·006
	20 10	20 20	21 19 38
(738p)	21 6	21·22	
	22 0	− 0·744	197 26 7

Digitized by Google

1889, August 22. Obs. ELKIN, T. E.—*continued.*

Star.	Chronometer.	Micrometer.	Means.
	h m s	° ′ ″	h m s
— 5·4989 (d)	21 22 44	— 0·768	21 24 55
(739s)	23 44	17 21 23·	46·002
	25 1	18 20	
	25 47	20 22	21 25 17
(740p)	26 36	10 11·	17 18 15
	27 7	+ 0·770	
— 5·4989 (d)	21 28 11	+ 0·768	21 30 1
(741s)	28 59	197 20 21	46·046
	29 32	12 12·	
	30 27	6 7	21 30 2
(742p)	31 12	11 12	
	31 52	— 0·722	197 12 41
— 5·4989 (d)	21 32 34	— 0·780	21 34 2
(743s)	33 9	17 10 12·	45·975
	33 50	13 16	
	34 28	11 13·	21 34 5
(744p)	34 58	3 5·	17 10 34
	35 30	+ 0·755	

1889, August 22. Obs. ELKIN, T. E.—*continued.*

Star.	Chronometer.	Micrometer.	Means.
	h m s	′ ″ ′ ″	h m s
Standards.	21 39 27	+ 1·312	21 41 15
(745s)	39 58	0 35 1 1	509·023
		4 48 3 50	
	41 58	1 7 0 58	21 40 58
(746p)		5 27 3 18	7 10 42
	43 4	— 1·289	
Standards.	21 43 55	— 1·213	21 45 46
(747s)	44 27	0 46 0 48	509·034
		3 33 3 18	
	46 1	1 11 0 41	21 45 14
(748p)		3 58 3 20	187 10 20
	47 37	+ 1·247	

At Beginning, Thermometer 68°·5.
„ End „ 63°·0. Barometer 762·5 mm.
Chronometer Correction, + 0m. 1s. I. 3. S. 3.

Digitized by Google

LEIPZIG

OBSERVATIONS OF VICTORIA

IN

1889.

Digitized by Google

LEIPZIG HELIOMETER OBSERVATIONS OF VICTORIA.—DISTANCES.

Observer—DR. PETER.

Sidereal time.	Scale A.	Micrometer.	Scale B.	Micrometer.	Mean of times and distance.	Rotation Number.	Sidereal time.	Scale A.	Micrometer.	Scale B.	Micrometer.	Mean of times and distance.	Rotation Number.
1889, JUNE 7.													
Victoria and D. M. — 9°·5382 (μ). Screen II.						1	Victoria and D. M. — 9°·5382 (μ). Screen II.						2
m s					h m s		h m s					h m s	
17 7 45·7	232	842	541·8	442			17 25 17·2	141	661	632·8	150		
11 10·7	232	821	541·8	473	17 14 20·7		27 43·6	141	721	632·8	111	17 29 43·9	
16 10·2	141	541	632·8	241	1976″·945		31 29·6	232	678	542·0	693	1973″·594	
22 16·2	141	622	632·8	179			34 25·1	232	635	542·0	730		
Standard Stars.						4	Victoria and D. M. — 8°·5237 (κ). Screen I.						6
18 13 38·5	38	533	735·9	383			18 51 7·2	103	688	671·4	460		
15 31·5	38	544	735·9	407	18 17 21·3		53 45·7	103	759	671·3	386	18 55 13·3	
19 15·5	336	570	439·7	101	6453″·788		56 56·1	271	087	504·5	990	3637″·498	
20 59·5	336	540	439·8	140			59 4·1	271	037	504·5	040		

I. 2–3 ; S. 2–3. Focal point 10·29.
Sky quite bright ; moonlight. Victoria so faint that it had to be observed in a completely dark field. Later on Victoria became somewhat brighter, so that it would have borne faint illumination of the field, but the observations were made throughout without illumination. Standard stars observed with illumination.

1889, JUNE 8.

Victoria and D. M. — 9°·5382 (μ). Screen II.						8	Standard Stars.						10
h m s					h m s		h m s					h m s	
17 16 42·8	227	447	547·0	498			17 55 6·8	336	500	439·7	050		
19 33·3	227	461	547·0	470	17 21 0·6		57 13·8	336	515	439·7	044	17 59 11·6	
22 49·8	146	549	627·8	974	1756″·717		18 0 2·8	38	494	735·9	369	6454″·066	
24 56·3	146	475	627·8	015			4 22·8	38	503	735·9	391		

I. 3 ; S. 2–3. Focal point 10·34. Moonlight.
Cloudy before and after. Everything, including Standard stars, observed with dark field. Observing difficult. Probably faint clouds were passing frequently.

1889, JUNE 17.

Victoria and D. M. — 6°·5360 (θ).						12	Victoria and D. M. — 9°·5382 (μ). Screen I.						13
h m s					h m s		h m s					h m s	
16 42 10·8	92	041	682·1	192			17 2 27·8	316	762	460·2	188		
46 28·8	92	108	682·0	120	16 48 14·3		6 8·3	316	840	460·1	121	17 7 57·6	
50 44·3	281	890	492·7	390	4108″·793		9 41·8	59	532	716·7	970	5578″·891	
53 33·3	281	833	492·7	451			13 32·3	59	413	716·8	087		

Digitized by Google

Sidereal time.	Scale A.	Micrometer.	Scale B.	Micrometer.	Mean of times and distance.	Rotation Number.
1889, JUNE 17—*continued*.						
Victoria and D. M. — 9°·5382 (μ). Screen I.						14
h m s					h m s	
17 17 56·3	58	910	715·9	638		
21 19·3	58	846	715·9	780	17 23 30·8	
25 44·8	315	885	458·7	215	5586″·623	
29 2·8	315	010	458·5	090		
Victoria and D. M. — 6°·5360 (θ).						15
h m s					h m s	
17 35 42·3	281	849	493·4	660		
39 31·8	281	780	493·5	741	17 41 33·9	
44 16·3	92	590	681·1	922	4092″·256	
46 45·3	92	544	681·2	940		
Victoria and D. M. — 6°·5360 (θ).						16
17 59 0·3	93	200	682·0	112		
18 1 52·8	93	217	681·9	056	18 3 14·2	
4 50·8	281	705	493·9	619	4083″·692	
7 12·8	281	630	494·0	664		

I. 3; S. 3. Focal point 10·29.
Everything observed in a completely dark field, although Victoria would have borne faint illumination. The brightness of the images was very variable. After reversal of the telescope the sky quickly became so clouded that observations were impossible.

Sidereal time.	Scale A.	Micrometer.	Scale B.	Micrometer.	Mean of times and distance.	Rotation Number.
1889, JUNE 18.						
Victoria and D. M. — 6°·5360 (θ).						17
h m s					h m s	
17 10 33·8	269	642	506·9	550		
13 27·3	269	629	507·0	600	17 15 11·6	
16 42·8	106	421	669·7	901	3538″·368	
20 2·3	106	464	669·7	853		
Victoria and D. M. — 9°·5382 (μ). Screen I.						18
h m s					h m s	
17 29 12·3	45	252	730·1	579		
31 35·8	45	225	730·2	600	17 33 13·6	
34 47·8	330	796	446·4	677	6177″·889	
37 18·3	330	811	446·4	650		
Victoria and D. M. — 9°·5382 (μ). Screen I.						19
17 43 37·8	329	482	445·2	002		
46 31·3	329	460	445·3	065	17 48 20·9	
50 16·8	44	320	729·7	648	6184″·951	
52 57·8	44	303	729·7	684		
Victoria and D. M. — 6°·5360 (θ).						20
18 0 23·8	105	750	668·0	780		
2 17·3	105	802	668·0	718	18 3 38·7	
4 59·3	268	448	506·8	022	3520″·975	
6 54·3	268	341	506·9	130		
Victoria and D. M. — 6°·5360 (θ).						21
18 24 35·3	268	330	507·1	652		
27 17·3	268	225	507·2	756	18 29 15·3	
31 28·3	106	608	668·4	522	3510″·853	
33 40·3	106	654	668·4	451		
Victoria and D. M. — 9°·5382 (μ). Screen I.						22
18 41 58·3	44	575	730·8	161		
44 34·3	44	569	730·8	194	18 46 24·8	
48 16·3	331	350	445·8	053	6212″·786	
50 50·3	331	340	445·9	015		
Victoria and D. M. — 9°·5382 (μ). Screen I.						23
18 57 21·8	330	118	444·8	529		
59 43·8	330	221	444·7	470	19 2 1·4	
19 4 4·8	43	825	730·2	286	6219″·801	
6 55·3	43	762	730·2	378		
Victoria and D. M. — 6°·5360 (θ).						24
19 16 12·8	106	251	667·7	521		
17 46·8	106	273	667·7	519	19 19 20·1	
20 49·8	267	143	507·2	531	3491″·598	
22 30·8	267	167	507·2	527		

I. 3; S. 2–3, for first three sets: afterwards I. 2; S. 2. Focal point 10·29.
At the beginning the whole sky was clouded over, and in the course of the observations clouds were often passing. Everything observed with dark field. The observer's eye very tired at the end.

Digitized by Google

Sidereal time.	Scale A.	Micrometer.	Scale B.	Micrometer.	Mean of times and distance.	Rotation Number.
1889, JUNE 20.						
Standard Stars.						29
h m s					h m s	
16 16 44·3	39	280	736·7	790		
22 57·3	39	288	736·7	830	16 23 44·8	
25 58·3	336	949	439·9	890	6449″·964	
29 19·3	336	950	439·9	889		
Victoria and D. M. — 7°·5183 (λ). Screen I.						36
19 15 19·3	217	035	560·2	619		
17 46·8	217	100	560·2	548	19 19 19·6	
20 30·3	159	682	617·5	670	1252″·020	
23 41·8	159	642	617·5	738		

I. 2–3 ; S. 3, for first set : I. 2 ; S. 2 for the rest. Focal point 10·29.
At first completely clear. At end of first measures of Standards dense clouds suddenly appeared, which, however, again dispersed. The brightness of the objects varied excessively within short intervals ; this variation increased the difficulty of measuring and was caused probably by local mist or cloud not visible to the naked eye. Observations made without illumination of field.

Sidereal time.	Scale A.	Micrometer.	Scale B.	Micrometer.	Mean of times and distance.	Rotation Number.
Victoria and D. M. — 7°·5183 (λ). Screen I.						31
h m s					h m s	
17 25 49·8	159	804	616·1	166		
28 5·8	159	775	616·2	221	17 29 23·9	
30 35·8	216	689	560·5	640	1224″·440	
33 4·3	216	697	560·5	659		
Standard Stars.						37
19 32 11·3	39	420	736·9	335		
34 56·8	39	427	736·9	369	19 36 12·9	
37 42·3	336	488	439·7	021	6454″·283	
40 1·3	336	480	439·7	040		

1889, JUNE 21.						
Victoria and D. M. — 6°·5360 (θ). Shutter.						39
h m s					h m s	
16 47 53·5	145	440	630·2	784		
51 9·0	145	444	630·2	795	16 55 40·8	
53 17·5	229	188	545·7	513	1828″·917	
17 10 23·0	229	919	545·8	799		
Victoria and D. M. — 7°·5183 (λ). Screen I.						40
h m s					h m s	
17 17 32·0	225	969	551·0	001		
19 7·5	225	040	551·0	938	17 20 30·6	
22 41·5	150	951	625·8	615	1627″·708	
..... completely clouded.						

I. 3–4 ; S. 2–3. Focal point 10·29.
Everything observed in a dark field and for the most part through clouds. It became clear suddenly, but soon clouded up again so thickly that the stars could no longer be seen.

1889, JUNE 22.						
Victoria and D. M. — 6°·5360 (θ).						41
h m s					h m s	
17 17 1·2	159	259	617·5	229		
19 23·7	159	340	617·4	153	17 21 8·6	
22 44·2	216	520	559·4	331	1249″·548	
25 21·2	216	511	559·4	342		
Victoria and D. M. — 7°·5183 (λ). Screen I.						42
h m s					h m s	
17 32 24·7	237	308	538·7	612		
46 5·7	237	650	538·3	288	17 45 58·5	
50 48·2	138	249	638·5	154	2161″·301	
54 35·2	138	222	638·4	149		
Victoria and D. M. — 7°·5183 (λ). Screen I.						43
18 7 54·7	138	019	638·8	672		
18 10 58·2	138	929	638·9	700	18 12 20·2	
14 6·7	238	259	538·9	952	2172″·763	
16 21·2	238	280	538·9	900		
Victoria and D. M. — 6°·5360 (θ).						44
18 19 59·2	216	571	560·5	498		
23 28·2	216	477	560·6	611	18 24 34·5	
26 17·2	160	650	617·2	090	1223″·958	
28 33·2	160	691	617·2	029		

Digitized by Google

1889, JUNE 22—*continued.*

Sidereal time.	Scale A.	Micrometer.	Scale B.	Micrometer.	Mean of times and distance.	Rotation Number.
Victoria and D. M. — 6°·5360. (θ)						45
h m s					h m s	
18 31 57·2	160	740	617·1	977		
34 6·7	160	818	617·0	901	18 34 53·6	
35 58·7	216	273	560·7	772	1219″·930	
37 31·7	216	222	560·7	810		
Victoria and D. M. — 7°·5183. (λ) Screen I.						46
h m s					h m s	
18 42 31·7	239	693	539·3	428		
45 0·2	239	769	539·2	319	18 47 29·6	
49 30·2	138	148	639·5	332	2186″·749	
52 56·2	138	058	639·7	421		
Victoria and D. M. — 7°·5183. (λ) Screen I.						47
18 58 16·2	137	015	638·7	510		
19 1 46·7	137	982	638·8	613	19 2 56·0	
4 47·7	238	252	537·8	948	2193″·628	
6 53·2	238	280	537·8	916		
Victoria and D. M. — 6°·5360. (θ)						48
19 10 54·2	215	680	560·4	468		
14 24·7	215	621	560·5	549	19 16 36·0	
19 31·2	160	758	616·1	107	1202″·900	
21 33·7	160	780	616·1	110		

Nos. 42 and 43, I. 3–2 ; S. 2–3 : for the rest I. 2 ; S. 2. Focal point 10·29.
Observed in dark field. Became clear suddenly. The first two sets (up to $17^h\,54^m$) are very uncertain, as the stars were scarcely visible through thin cloud. On this account, and as the weather appeared very uncertain, no change was made in the position of the telescope.

1889, JUNE 24.

Sidereal time.	Scale A.	Micrometer.	Scale B.	Micrometer.	Mean of times and distance.	Rotation Number.
Standard Stars.						55
h m s					h m s	
19 17 47·7	336	416	439·7	988		
21 2·6	336	407	439·7	999	19 22 26·9	
23 53·6	39	401	736·9	352	6454″·268	
27 3·6	39	388	736·9	360		
Victoria and D. M. — 6°·5360. (θ)						56
h m s					h m s	
19 34 22·5	177	762	600·0	899		
39 31·5	177	740	600·1	945	19 41 19·5	
44 14·5	199	277	577·7	556	483″·197	
47 9·4	199	369	577·5	498		
Victoria and D. M. — 6°·5360. (θ)						57
19 50 39·9	199	308	577·7	548		
54 11·9	199	334	577·6	515	19 55 53·9	
58 10·4	177	679	600·2	052	484″·148	
20 0 33·4	177	712	600·2	045		

I. 3 ; S. 3, Focal point 10·29.
Observations made in dark field. The images were very variable, probably on account of the smoke in the neighbouring gardens (Festival of St. John). A few clouds.

1889, JUNE 25.

Sidereal time.	Scale A.	Micrometer.	Scale B.	Micrometer.	Mean of times and distance.	Rotation Number.
Standard Stars.						58
h m s					h m s	
16 23 22·8	336	921	439·9	851		
25 54·3	336	940	439·9	867	16 26 55·4	
28 1·3	39	372	736·8	849	6449″·977	
30 23·3	39	282	736·8	840		
Victoria and D. M. — 6°·5360. (θ)						61
h m s					h m s	
17 22 5·3	168	170	607·5	174		
26 54·8	168	079	607·6	272	17 27 37·8	
29 45·3	206	692	568·1	879	841″·694	
31 45·8	206	760	568·0	819		

Digitized by Google

Sidereal time.	Scale A.	Micrometer.	Scale B.	Micrometer.	Mean of times and distance.	Rotation Number.
1889, JUNE 25—*continued.*						
Victoria and D. M. — 6°·5360. (θ)						62
h m s					h m s	
17 36 28·8	208	306	569·8	156		
38 33·8	208	321	569·8	108	17 40 8·4	
40 59·3	169	240	608·8	940	847″·151	
44 31·8	169	138	608·9	035		
Victoria and D. M. — 6°·5360. (θ)						65
h m s					h m s	
18 31 51·3	168	890	608·7	470		
34 21·8	168	872	608·8	495	18 35 28·1	
36 45·3	208	877	568·9	709	868″·024	
38 53·8	208	940	568·8	665		
Victoria and D. M. — 6°·5360. (θ)						66
18 44 32·8	208	370	568·8	932		
48 45·3	208	478	568·7	804	18 50 38·3	
53 25·8	168	899	609·1	159	873″·501	
55 49·3	168	870	609·1	160		
Standard Stars.						69
19 40 20·3	336	696	439·8	280		
42 9·3	336	682	439·7	288	19 43 35·1	
44 25·3	39	623	736·9	668	6454″·638	
47 25·3	39	581	736·9	621		
Standard Stars.						71
20 11 34·3	336	527	439·7	043		
14 17·3	336	528	439·7	070	20 16 4·8	
18 12·3	39	466	736·9	411	6454″·591	
20 15·3	39	460	736·9	450		

I. 2; S. 2. Focal point 10·29.
Observed in dark field. Became clear suddenly: quality of images often changing. A few thin clouds kept passing over the sky all the night, and at times disturbed the observing.

Sidereal time.	Scale A.	Micrometer.	Scale B.	Micrometer.	Mean of times and distance.	Rotation Number.
1889, JUNE 26.						
Victoria and D. M. — 5°·5138. (ε) Screen I						72
h m s					h m s	
16 40 7·1	69	650	699·6	820		
41 1·1	69	110	699·6	286	16 45 49·7	
48 26·6	299	050	470·3	662	4988″·761	
50 44·1	299	031	470·3	680		
Victoria and D. M. — 7°·5183. (λ)						73
h m s					h m s	
16 55 6·1	290	902	479·3	548		
56 53·6	290	960	479·3	496	16 59 49·1	
17 2 13·6	79	970	691·7	319	4599″·655	
5 3·1	79	812	691·7	450		
Victoria and D. M. — 7°·5183. (λ) Shutter.						74
17 10 36·6	78	306	690·9	150		
13 15·6	78	298	690·9	225	17 15 39·5	
18 8·6	290	182	478·7	584	4608″·570	
20 37·1	290	241	478·7	522		
Victoria and D. M. — 5°·5138. (ε) Screen I.						75
17 26 29·6	299	005	470·9	790		
28 33·6	299	022	470·9	781	17 27 46·9	
31 7·1	69	488	698·7	101	4973″·671	
34 57·1	69	550	698·7	015		
Victoria and D. M. — 5°·5138. (ε) Screen I.						76
17 45 34·6	70	198	699·5	236		
48 9·6	70	220	699·5	183	17 49 38·5	
51 10·6	299	010	471·3	674	4965″·751	
53 39·1	299	981	471·3	700		
Victoria and D. M. — 7°·5183. (λ) Shutter.						77
17 58 38·1	291	471	478·7	904		
18 0 43·1	291	504	478·7	867	18 2 42·1	
4 9·6	77	406	691·1	792	4633″·067	
7 17·6	77	326	691·2	843		

Digitized by Google

1889, JUNE 26—*continued*.

Victoria and D. M. — 7°·5183. (λ) Shutter. — 78

Sidereal time.	Scale A.	Micrometer.	Scale B.	Micrometer.	Mean of times and distance.	Rotation Number.
h m s					h m s	
18 17 54·6	77	815	691·5	826		
20 50·1	77	756	691·6	900	18 21 50·7	
23 38·1	291	817	478·1	060	4642″·835	
25 0·1	291	848	478·1	054		

Victoria and D. M. — 5°·5138. (ε) Screen I. — 79

Sidereal time.	Scale A.	Micrometer.	Scale B.	Micrometer.	Mean of times and distance.	Rotation Number.
h m s					h m s	
18 29 49·6	298	913	471·0	913		
33 45·1	298	760	471·1	962	18 35 6·0	
36 52·6	70	621	698·6	880	4948″·181	
39 56·6	70	691	698·6	782		

I. 2–3; S. 2–3 for first four sets: I. 2; S. 2 for Nos. 76 and 77: then I. 2–1; S. 2–1. Focal point 10·29.
Observed in dark field. Quite clear night. Victoria appeared at times rather faint.

1889, JUNE 28.

Victoria and D. M. — 7°·5183. (λ) Shutter. — 80

Sidereal time.	Scale A.	Micrometer.	Scale B.	Micrometer.	Mean of times and distance.	Rotation Number.
h m s					h m s	
17 56 42·6	325	073	451·6	342		
18 0 10·6	325	110	451·6	298	18 [illegible] 30·7	
3 18·6	50	649	725·3	260	5960″·237	
5 51·1	50	601	725·3	279		

Victoria and D. M. — 4°·4992. (γ) Shutter. — 81

Sidereal time.	Scale A.	Micrometer.	Scale B.	Micrometer.	Mean of times and distance.	Rotation Number.
h m s					h m s	
18 13 30·6	39	608	738·6	760		
16 29·1	39	665	738·5	720	18 18 49·6	
20 56·6	338	747	440·3	336	6487″·386	
24 22·1	338	712	440·3	377		

Victoria and D. M. — 4°·4992. (γ) Shutter. — 82

Sidereal time.	Scale A.	Micrometer.	Scale B.	Micrometer.	Mean of times and distance.	Rotation Number.
18 28 35·1	337	154	439·5	035		
33 19·6	337	162	439·5	150	18 34 35·6	
36 40·6	38	599	737·2	076	6481″·697	
39 47·1	38	719	737·1	969		

Victoria and D. M. — 7°·5183. (λ) Shutter. — 83

Sidereal time.	Scale A.	Micrometer.	Scale B.	Micrometer.	Mean of times and distance.	Rotation Number.
18 45 14·6	49	508	725·3	052		
48 43·6	49	422	725·4	149	18 51 16·9	
54 12·6	325	322	450·2	830	5986″·225	
56 56·6	325	400	450·1	760		

I. 3; S. 3. Focal point 10·29.
At larger zenith-distances only the brightest stars were visible; observations, therefore, could only be commenced late. Victoria appeared excessively faint. Observations made in dark field.

1889, JUNE 29.

Victoria and D. M. — 4°·4992. (γ) Shutter. — 84

Sidereal time.	Scale A.	Micrometer.	Scale B.	Micrometer.	Mean of times and distance.	Rotation Number.
h m s					h m s	
17 21 30·6	51	835	725·2	209		
24 14·1	51	917	725·1	132	17 25 33·0	
27 3·6	325	094	452·7	505	5935″·283	
29 23·6	325	040	452·7	575		

Victoria and D. M. — 7°·5183. (λ) Shutter. — 85

Sidereal time.	Scale A.	Micrometer.	Scale B.	Micrometer.	Mean of times and distance.	Rotation Number.
h m s					h m s	
17 35 19·6	341	093	437·0	993		
38 20·6	341	180	436·9	893	17 39 52·9	
41 46·1	36	172	742·0	215	6627″·411	
44 5·1	36	104	742·1	290		

Victoria and D. M. — 7°·5183. (λ) Shutter. — 86

Sidereal time.	Scale A.	Micrometer.	Scale B.	Micrometer.	Mean of times and distance.	Rotation Number.
17 53 23·1	35	537	741·4	322		
57 16·6	35	494	741·5	372	17 59 13·0	
18 1 48·1	341	583	436·2	069	6639″·097	
4 24·1	341	660	436·1	016		

I. 3; S. 2. Focal point 10·29.
Observed in dark field. The observations were obtained during a short interval of clearing.

Digitized by Google

Sidereal time.	Scale A.	Micrometer.	Scale B.	Micrometer.	Mean of times and distance.	Rotation Number.
1889, JUNE 30.						
Victoria and D. M. — 5°·5120. (y)						87
h m s					h m s	
16 57 33·1	52	625	725·3	371		
59 49·6	52	610	725·3	384	17 1 49·1	
17 3 53·6	325	250	453·6	280	5918″·167	
6 0·1	325	200	453·6	349		
Victoria and D. M. — 6°·5360. (θ)						88
h m s					h m s	
17 11 30·1	280	953	496·4	789		
13 43·6	280	024	496·3	695	17 15 53·4	
17 30·1	96	342	681·5	369	4010″·248	
20 49·6	96	235	681·6	473		
Victoria and D. M. — 6°·5360. (θ)						89
17 24 21·6	95	655	680·7	042		
30 6·1	95	619	680·8	194	17 31 52·4	
35 4·1	280	146	495·8	729	4018″·963	
37 57·6	280	237	495·7	650		
Victoria and D. M. — 5°·5120. (y)						90
17 42 24·6	323	170	452·3	695		
45 25·6	323	091	452·3	767	17 48 17·5	
49 51·6	52	305	724·4	030	5898″·468	
55 28·1	52	382	724·3	945		
Victoria and D. M. — 5°·5120. (y) Shutter.						91
18 6 59·6	53	891	725·1	007		
13 6·1	53	019	724·9	848	18 15 29·0	
19 8·1	324	661	454·0	709	5886″·368	
22 42·1	324	544	454·1	809		
Victoria and D. M. — 6°·5360. (θ)						92
18 29 0·6	282	759	496·5	790		
32 11·1	282	835	496·4	707	18 34 2·0	
36 10·6	95	320	682·5	200	4051″·573	
38 45·6	95	254	682·5	252		
Victoria and D. M. — 6°·5360. (θ)						93
18 43 42·6	94	890	681·6	123		
49 48·1	94	830	681·7	229	18 50 32·6	
52 53·1	281	148	494·9	980	4060″·248	
55 46·6	281	280	494·8	911		
Victoria and D. M. — 5°·5120. (y) Shutter.						94
19 3 50·6	322	552	453·0	540		
9 24·1	322	421	453·1	658	19 10 35·6	
12 59·6	52	248	722·6	385	5859″·994	
16 8·1	52	301	722·5	309		

I. 3 ; S. 3 for first two sets : then I. 2 ; S. 2, except for last set ; for which I. 3 ; S. 2–3. Focal point 10·29.
Observed in dark field. Air very non-transparent, especially at the beginning and end of the observations. Victoria often only visible with much straining. Completely clouded before and after the observations.

Sidereal time.	Scale A.	Micrometer.	Scale B.	Micrometer.	Mean of times and distance.	Rotation Number.
1889, JULY 6.						
Victoria and D. M. — 5°·5124. (z)						95
h m s					° ′ ° ′	
19 16 57·9	187	210	587·4	985	315 59 126 4	
20 6·9	187	142	587·4	922	306 39 126 45	
25 15·9	187	324	588·3	986	326 9 146 4	
31 5·4	187	280	588·3	835	313 12 133 18	
$19^h\ 23^m\ 21^s{\cdot}5$ 9″·946						
Victoria and D. M. — 5°·5124. (z)						96
h m s					° ′ ° ′	
19 38 23·9	188	071	588·5	069	98 19 278 24	
41 33·9	188	148	588·5	068	92 17 272 21	
50 1·4	188	330	589·3	910	97 5 277 10	
53 19·9	188	339	589·3	909	95 26 275 31	
$19^h\ 45^m\ 49^s{\cdot}8$ 8″·777						
Victoria and D. M. — 5°·5124. (z)						97
20 5 50·4	188	284	589·4	052	78 23 258 28	
10 42·9	188	242	589·4	071	77 50 257 55	
15 17·4	188	281	588·3	882	61 25 241 30	
17 48·4	188	355	588·3	810	59 25 239 31	
$20^h\ 12^m\ 24^s{\cdot}8$ 12″·331						
Victoria and D. M. — 5″·5124. (z)						98
20 22 18·9	188	401	586·1	520	234 25 54 31	
25 55·4	188	449	586·0	469	233 12 53 19	
28 56·9	185	719	588·7	174	235 24 55 31	
33 3·4	185	535	588·9	351	233 22 53 29	
$20^h\ 27^m\ 33^s{\cdot}6$ 31″·378						

Digitized by Google

1889, JULY 6—*continued.*

Victoria and D. M. — 5°·5124. (z) — 99

Sidereal time.	Scale A.	Micrometer.	Scale B.	Micrometer.	Mean of times and distance.		Rotation Number.
h m s					° ′	° ′	
20 44 12·4	188	540	587·9	340	223 20	43 26	
48 1·4	188	502	587·9	302	222 38	42 53	
50 40·4	187	530	588·9	327	226 8	46 14	
54 26·9	187	557	588·9	376	228 58	49 4	
	$20^h\ 49^m\ 20^s·3$		$21''·768$				

Victoria and D. M. — 5°·5124. (z) — 100

Sidereal time.	Scale A.	Micrometer.	Scale B.	Micrometer.	Mean of times and distance.		Rotation Number.
h m s					° ′	° ′	
20 59 43·9	186	621	588·0	545	45 44	225 50	
21 3 49·4	186	474	588·1	711	44 6	224 11	
6 55·4	188	027	587·6	187	41 11	221 17	
10 2·4	188	032	587·6	243	38 1	218 7	
	$21^h\ 5^m\ 7^s·8$		$26''·591$				

I. 2; S. 3. Focal point 10·28.
Clouds prevented earlier commencement of observing. Everything observed in dark field.
With the exception of the 4th set, the simple distance of the objects was measured by placing the images between one another ($\begin{smallmatrix}A&B&A&B\\ \cdot&\cdot&*&*\end{smallmatrix}$ and $\begin{smallmatrix}B&A&B&A\\ \cdot&\cdot&*&*\end{smallmatrix}$), in the 4th, as an experiment, four times the distance ($\begin{smallmatrix}A&A&B&B\\ \cdot&*&\cdot&*\end{smallmatrix}$ and $\begin{smallmatrix}B&B&A&A\\ \cdot&*&\cdot&*\end{smallmatrix}$). The latter method of observing was, however, abandoned, as it gave rise to a feeling of considerable uncertainty. Both objects were nearly equally bright. The position-angle readings depend on mere estimation of the position of the index.

1889, JULY 7.

Standard Stars. — 101

Sidereal time.	Scale A.	Micrometer.	Scale B.	Micrometer.	Mean of times and distance.	Rotation Number.
h m s					h m s	
17 14 14·7	39	778	736·9	538		
21 11·7	39	780	736·9	561	17 21 13·7	
23 29·2	336	735	439·7	334	6453″·049	
25 59·2	336	709	439·7	341		

Victoria and D. M. — 5°·5124. (z) — 104

Sidereal time.	Scale A.	Micrometer.	Scale B.	Micrometer.	Mean of times and distance.	Rotation Number.
h m s					h m s	
18 7 21·2	203	928	571·6	079		
10 40·2	203	995	571·5	012	18 12 40·1	
14 46·2	170	110	603·3	722	703″·502	
17 52·7	170	031	603·4	848		

Victoria and D. M. — 5°·5124. (z) — 105

Sidereal time.	Scale A.	Micrometer.	Scale B.	Micrometer.	Mean of times and distance.	Rotation Number.
h m s					h m s	
18 21 6·7	170	932	603·4	930		
34 52·2	170	619	603·8	278	18 33 26·3	
37 49·2	203	731	570·8	342	715″·656	
39 57·2	203	788	570·7	297		

I. 3-4; S. 3 for No. 101 : then I. 2-3; S. 2-3. Focal point 10·28.
Observed in dark field. During almost the whole time of observation the sky was more or less clouded, and most of the pointings were injured by mist. Work discontinued on account of sky completely clouding over.

1889, JULY 9.

Victoria and D. M. — 5°·5120. (y) — 113

Sidereal time.	Scale A.	Micrometer.	Scale B.	Micrometer.	Mean of times and distance.	Rotation Number.
h m s					h m s	
20 25 43·1	144	264	628·4	071		
27 55·6	144	260	628·4	066	20 28 47·5	
29 51·6	229	645	546·3	189	1815″·571	
31 39·6	229	670	546·2	162		

Victoria and D. M. — 5°·5099. (x) — 114

Sidereal time.	Scale A.	Micrometer.	Scale B.	Micrometer.	Mean of times and distance.	Rotation Number.
h m s					h m s	
20 36 51·1	215	402	559·7	608		
39 33·6	215	310	559·7	690	20 41 18·6	
42 57·1	158	827	615·0	836	1220″·152	
45 52·6	158	894	615·0	785		

Digitized by Google

1889, JULY 9—*continued.*

Victoria and D. M. — 5°·5099. (x) — Rotation Number 115

Sidereal time.	Scale A.	Micrometer.	Scale B.	Micrometer.	Mean of times and distance.
h m s					h m s
20 52 38·1	159	700	615·8	225	
54 50·6	159	746	615·7	190	
58 30·6	215	610	560·1	698	20 56 35·7
21 0 23·6	215	569	560·1	777	1212″·969

Victoria and D. M. — 5°·5120. (y) — Rotation Number 116

Sidereal time.	Scale A.	Micrometer.	Scale B.	Micrometer.	Mean of times and distance.
h m s					h m s
21 4 20·1	229	122	545·8	520	
7 29·1	229	187	545·7	450	21 8 30·4
10 23·1	145	490	630·1	700	1829″·795
11 49·1	145	465	630·1	729	

I. 2–1 : S. 2–1. Focal point 10·28.
Everything observed in dark field. Sky perfectly clear, but in some parts probably at times there was a thin mist.

1889, JULY 11.

Victoria and D. M. — 4°·4960. (w) — Rotation Number 118

Sidereal time.	Scale A.	Micrometer.	Scale B.	Micrometer.	Mean of times and distance.
h m s					h m s
17 27 36·1	212	052	561·8	556	
29 36·6	212	020	561·8	590	17 30 56·9
31 35·6	161	752	612·9	595	1109″·395
34 59·1	161	789	612·9	551	

Victoria and D. M. — 5°·5099. (x) — Rotation Number 119

Sidereal time.	Scale A.	Micrometer.	Scale B.	Micrometer.	Mean of times and distance.
h m s					h m s
17 39 28·6	167	930	605·7	460	
41 44·1	167	902	605·8	482	17 43 22·4
44 54·6	205	911	567·8	690	824″·464
47 22·1	205	932	567·8	658	

I. 3–2 ; S. 2–3. Focal point 10·28.
Observed in dark field. The observations were obtained during a short interval of clear sky.

1889, JULY 24.

Victoria and D. M. — 4°·4883. (p) — Rotation Number 128

Sidereal time.	Scale A.	Micrometer.	Scale B.	Micrometer.	Mean of times and distance.
h m s					h m s
17 18 50·7	156	095	617·8	679	
20 48·2	156	100	617·8	672	17 24 7·1
26 59·7	217	873	557·2	236	1320″·687
29 49·7	217	826	557·3	280	

Victoria and D. M. — 4°·4903. (q) — Rotation Number 130

Sidereal time.	Scale A.	Micrometer.	Scale B.	Micrometer.	Mean of times and distance.
h m s					h m s
17 52 8·1	143	686	632·1	972	
54 18·1	143	650	632·2	991	17 55 39·1
56 21·1	231	489	543·6	640	1918″·597
59 49·1	231	571	543·5	569	

I. 3–4 ; S. 2–3 for No. 128 : I. 3–2 ; S. 3–2 for No. 130. Focal point 10·28.
Observed in dark field ; the first part through clouds. The amount of cloudiness very variable, but images not especially so.

1889, JULY 29.

Victoria and D. M. — 5°·5036. (n) Screen I. — Rotation Number 132

Sidereal time.	Scale A.	Micrometer.	Scale B.	Micrometer.	Mean of times and distance.
h m s					h m s
17 56 0·5	100	607	676·0	680	
58 16·0	100	560	676·1	722	17 59 27·0
18 0 43·0	275	490	500·7	811	3806″·228
2 48·5	275	506	500·7	794	

Victoria and D. M. — 3°·4649. (l) — Rotation Number 133

Sidereal time.	Scale A.	Micrometer.	Scale B.	Micrometer.	Mean of times and distance.
h m s					h m s
18 5 56·0	277	579	497·6	724	
9 15·5	277	533	497·7	760	18 9 54·3
11 9·5	96	599	677·1	739	3915″·645
13 16·0	96	591	677·1	742	

Digitized by Google

Sidereal time.	Scale A.	Micrometer.	Scale B.	Micrometer.	Mean of times and distance.	Rotation Number.
1889, JULY 29—*continued*.						
Victoria and D. M. — 3°·4649. (l)						134
h m s					h m s	
18 15 27·5	97	000	678·1	150		
20 10·5	97	991	678·1	072	18 20 59·5	
22 8·0	278	842	498·7	271	3913″·962	
26 12·0	278	790	498·7	293		
Victoria and D. M. — 5°·5036. (n) Screen I.						135
h m s					h m s	
18 31 53·5	275	010	500·6	106		
33 50·5	275	995	500·6	117	18 35 0·9	
36 12·5	99	909	675·1	250	3808″·656	
38 7·0	99	882	675·2	280		

I. 2–3; S. 2–3. Focal point 10·28.
Observed in dark field. Earlier commencement not possible on account of cloud. Clouded at end.

1889, JULY 30.

Victoria and D. M. — 4°·4877. (o)						136
h m s					h m s	
20 20 2·9	243	318	533·8	857		
23 25·4	243	418	533·7	802	20 24 26·9	
26 8·9	132	802	643·0	832	2393″·124	
28 10·4	132	740	643·1	889		
Victoria and D. M. — 4°·4861. (m) Screen II.						137
h m s					h m s	
20 34 51·4	163	086	612·9	854		
38 38·4	163	142	612·9	850	20 40 15·9	
41 53·9	212	222	563·9	030	1063″·873	
45 39·9	212	189	563·9	090		
Victoria and D. M. — 4°·4861. (m) Screen II.						138
20 51 40·9	211	003	563·1	131		
53 53·4	211	950	563·1	198	20 55 55·2	
57 27·4	162	460	611·5	455	1057″·990	
21 0 38·9	162	450	611·5	433		
Victoria and D. M. — 4°·4877. (o)						139
21 4 29·9	131	188	642·8	606		
9 13·9	131	080	642·8	685	21 9 31·8	
11 20·9	242	302	531·9	081	2410″·476	
13 2·4	242	397	531·8	993		
Victoria and D. M. — 4°·4877. (o)						140
21 21 44·9	243	552	532·7	925		
26 18·9	243	620	532·6	872	21 27 51·3	
30 4·4	131	761	643·1	109	2417″·300	
33 16·9	131	723	643·1	159		
Victoria and D. M. — 4°·4861. (m) Screen II.						141
21 40 35·9	163	290	611·9	990		
44 12·4	163	280	611·8	921	21 46 43·0	
48 48·4	211	252	564·0	291	1040″·394	
53 15·4	211	193	564·1	372		
Victoria and D. M. — 4°·4861. (m) Screen II.						142
22 7 12·9	210	630	563·3	282		
9 32·4	210	571	563·4	321	22 11 51·3	
13 56·9	163	531	611·2	102	1031″·013	
16 42·9	163	571	611·2	068		
Victoria and D. M. — 4°·4877. (o)						143
22 22 43·4	131	731	644·1	802		
24 11·4	131	652	644·1	889	22 26 6·7	
26 53·4	243	521	531·5	631	2439″·065	
30 38·4	243	567	531·5	593		

I. 2; S. 2 first half; then I. 2–3. Focal point 10·29.
The eastern hour-angles lost through cloud. The two first distances observed with bright field, all the rest with dark field. Observer's eye very tired during the two last distance measures.

Digitized by Google

Sidereal time.	Scale A.	Micrometer.	Scale B.	Micrometer.	Mean of times and distance.	Rotation Number.
1889, JULY 31.						
Standard Stars.						144
h m s					h m s	
16 54 22·0	39	213	736·8	993		
56 14·0	39	207	736·9	033	16 57 20·8	
58 22·5	336	122	439·9	837	6452″·612	
17 0 24·5	336	111	439·9	854		
Victoria and D. M. — 4°·4861. (m) Screen II.						149
18 12 45·0	204	410	571·8	031		
15 5·0	204	430	571·8	032	18 17 34·6	
19 48·5	171	287	604·8	013	717″·447	
22 40·0	171	315	604·8	009		
Standard Stars.						152 & 153
19 55 27 *i*	39	751	737·0	771		
58 34 *e*	39	829	737·0	884		
Prism Rotated.						
20 1 15 *e*	39	829	737·0	892		
4 39 *i*	39	710	737·0	770		
6 50 *i*	39	698	737·0	765		
8 35 *e*	39	771	737·0	871		
Prism Rotated.						
10 39 *e*	39	780	737·0	861		
12 37 *i*	39	692	737·0	760	20 15 30·8	
17 13 *i*	336	815	439·8	390	6474″·631	
21 0 *e*	336	874	439·8	398		
Prism Rotated.						
23 16 *e*	336	896	439·8	381		
24 50 *i*	336	820	439·8	332		
27 43 *i*	336	780	439·8	304		
29 25 *e*	336	870	439·8	347		
Prism Rotated.						
32 5 *e*	336	848	439·8	384		
34 5 *i*	336	779	439·8	298		

Sidereal time.	Scale A.	Micrometer.	Scale B.	Micrometer.	Mean of times and distance.	Rotation Number.
Victoria and D. M. — 4°·4861. (m) Screen II.						146
h m s					h m s	
17 26 20·5	170	660	604·3	270		
28 59·5	170	680	604·3	260	17 30 11·4	
31 40·0	203	607	570·5	540	725″·912	
33 45·5	203	607	570·5	550		
Standard Stars.						151
18 40 8·0	336	512	439·7	088		
41 40·0	336	528	439·8	070	18 44 47·9	
47 55·5	39	500	736·9	415	6454″·234	
49 28·0	39	500	736·9	449		
Standard Stars.						154
20 37 37·6	336	780	439·8	297		
39 27·1	336	737	439·8	306	20 40 53·4	
42 11·1	39	671	737·0	701	6454″·891	
44 17·6	39	640	737·0	681		
Victoria and D. M. — 4°·4861. (m)						157
21 23 30·6	171	349	603·6	403		
26 11·6	171	371	603·5	382	21 28 28·2	
30 18·6	202	740	571·2	207	687″·317	
33 52·1	202	720	571·2	216		

I. 2; S. up to No. 152: I. 2–3; S. 2–3, for 154, 157. Focal point 10·29.

Eastern hour-angles—Sky completely free from cloud, everything observed in dark field. During the measurement of the distances of the Standard Stars twilight was still bright.

Western hour-angles—The images were considerably dimmed by mist rising from the ground. Observations made in bright field. Observing was discontinued because weariness of the eye became noticeable.

No. 152—These measures were made to ascertain the effect of the different directions of motion of the slides, and of the different positions of the prism.

Digitized by Google

Sidereal time.	Scale A.	Micrometer.	Scale B.	Micrometer.	Mean of times and distance.	Rotation Number.
1889, August 1.						
Victoria and D. M. — 4°·4861. (m) Screen II.						158
h m s					h m s	
17 17 24·4	203	390	571·6	357		
20 43·4	203	423	571·5	349	17 21 48·5	
23 5·9	170	492	603·3	119	704″·201	
26 0·4	170	505	603·3	090		
Victoria and D. M. — 4°·4855. (k)						160
17 51 13·9	207	182	569·1	360		
53 6·9	207	172	569·1	379	17 54 49·4	
56 19·4	168	537	607·7	812	841″·970	
58 37·4	168	590	607·5	753		

I. 3; S. 2-3. Focal point 10·29.
Up to 17h. 47m. the stars were only visible with excessive straining on account of thick *cirrus* cloud; besides at first twilight was still bright.
Observed in dark field.

Sidereal time.	Scale A.	Micrometer.	Scale B.	Micrometer.	Mean of times and distance.	Rotation Number.
Victoria and D. M. — 4°·4855. (k)						159
h m s					h m s	
17 33 36·9	167	971	606·9	660		
40 42·4	167	069	606·8	571	17 40 46·7	
43 18·4	206	921	568·0	941	844″·859	
45 28·9	206	917	568·0	970		
Victoria and D. M. — 4°·4861. (m) Screen II.						161
18 3 4·9	171	601	604·7	818		
6 18·9	171	580	604·7	820	18 7 6·2	
8 26·9	203	230	571·1	381	711″·944	
10 33·9	203	237	571·1	371		

1889, August 7.

Sidereal time.	Scale A.	Micrometer.	Scale B.	Micrometer.	Mean of times and distance.	Rotation Number.
Standard Stars.						166
h m s					h m s	
20 58 30·9	39	576	737·0	595		
21 1 8·9	39	559	737·0	607	21 2 22·4	
4 0·4	336	690	439·8	188	6455″·034	
5 49·4	336	689	439·8	220		
Victoria and D. M. — 5°·5006. (f)						170
22 14 52·9	197	512	577·6	522		
20 32·4	197	429	577·6	610	22 21 39·4	
23 30·9	176	910	597·1	020	439″·515	
27 41·4	176	022	597·0	950		

I. 3-2; S. 3-2. Focal point 10·31.
Everything observed in dark field. Observations at eastern hour-angles prevented by cloud. Clouded at end.

Sidereal time.	Scale A.	Micrometer.	Scale B.	Micrometer.	Mean of times and distance.	Rotation Number.
Victoria and D. M. — 5°·5006. (f)						169
h m s					h m s	
21 51 44·4	176	539	597·6	711		
54 50·4	176	589	597·6	700	21 58 54·7	
56 58·4	197	953	577·2	439	447″·718	
12 5·4	197	703	577·4	629		

1889, August 10.

Sidereal time.	Scale A.	Micrometer.	Scale B.	Micrometer.	Mean of times and distance.	Rotation Number.
Victoria and D. M. — 5°·4992. (e)						174
h m s					h m s	
20 38 14·5	156	351	619·7	689		
42 5·0	156	440	619·6	604	20 44 12·1	
46 9·0	219	069	557·1	340	1362″·713	
50 20·0	219	000	557·2	416		

I. 3-4; S. 3. Focal point 10·30.
Everything observed in dark field; moonlight. Earlier commencement impossible on account of clouds. Observations to the west prevented by thick clouds. Stars excessively faint and very difficult to observe.

Digitized by Google

Sidereal time.	Scale A.	Micrometer.	Scale B.	Micrometer.	Mean of times and distance.	Rotation Number.
1889, August 11.						
Victoria and D. M. — 5°·5006. (f) Shutter.						175
h m s					h m s	
20 28 56·6	155	570	621·3	987		
31 27·1	155	546	621·2	040	20 32 47·0	
34 4·1	220	588	555·4	389	1421″·163	
36 40·1	220	608	555·4	381		
Victoria and D. M. — 5°·4992. (e)						176
h m s					h m s	
20 41 4·6	210	591	564·6	840		
44 29·1	210	560	564·7	902	20 46 1·1	
47 39·1	164	101	611·0	041	1002″·732	
50 51·6	164	140	611·0	041		
Victoria and D. M. — 5°·4992. (e)						177
20 54 46·6	164	979	610·9	801		
56 49·1	164	031	610·9	779	20 58 11·0	
59 20·1	210	179	564·9	910	999″·665	
21 1 48·1	210	170	564·9	887		
Victoria and D. M. — 5°·5006. (f) Shutter.						178
21 7 45·1	220	233	555·0	180		
10 19·6	220	243	555·0	187	21 12 19·5	
13 33·1	154	240	620·8	809	1431″·934	
17 40·1	154	200	620·8	828		

I. 3; S. 3–2. Focal point 10·30.
Everything observed in dark field. Heavy thunderstorm for several hours previously. Cloud to east. Nearly always clouds at the western hour-angles; further measures not possible on account of cloud. Stars varied very much in brightness and sharpness.

Sidereal time.	Scale A.	Micrometer.	Scale B.	Micrometer.	Mean of times and distance.	Rotation Number.
1889, August 12.						
Victoria and D. M. — 5°·4992. (e)						183
h m s					h m s	
20 19 29·8	202	271	571·7	648		
22 8·8	202	253	571·7	707	20 23 38·6	
25 5·3	171	940	603·0	851	675″·894	
27 50·3	171	998	602·9	810		
Standard Stars.						184
h m s					h m s	
20 33 44·3	39	614	737·0	673		
36 26·3	39	614	737·0	663	20 37 40·2	
39 5·8	336	772	439·7	250	6455″·245	
41 24·3	336	727	439·7	241		
Victoria and D. M. — 5°·4992. (e)						185
20 45 44·8	171	178	602·7	544		
48 58·8	171	176	602·7	552	20 50 16·3	
51 36·8	202	890	572·0	021	669″·403	
54 44·8	202	894	572·0	998		
Victoria and D. M. — 5°·4992. (e)						186
20 59 12·3	203	247	573·1	488		
21 4 23 3	203	141	573·2	552	21 10 33·2	
11 35·8	172	845	603·5	705	664″·849	
27 1·3	172	973	603·3	594		
Standard Stars.						187
21 32 5·3	39	833	736·9	746		
34 57·3	39	805	736·9	747	21 37 41·1	
40 51·3	336	942	439·7	410	6454″·478	
42 50·3	336	889	439·7	440		
Victoria and D. M. — 5°·4992. (e)						188
21 48 29·3	202	735	572·6	060		
50 40·3	202	710	572·7	060	21 51 52·9	
52 46·8	172	283	603·0	330	655″·368	
55 35·3	172	330	603·0	292		
Victoria and D. M. — 5°·4992. (e)						189
22 1 30·3	172	408	602·8	199		
4 16 3	172	440	602·9	153	22 6 16·9	
7 43·3	202	540	572·9	271	651″·493	
11 37·8	202	476	572·9	340		

I. 2–3; S. 3–2. Focal point 10·30.
Observed in dark field; stars unsteady and diffused. Images very variable—often cloud and vapour passing over. Completely clouded at last.

Digitized by Google

Sidereal time.	Scale A.	Micrometer.	Scale B.	Micrometer.	Mean of times and distance.	Rotation Number.
1889, August 16.						
Victoria and D. M. — 5°·4992. (e)						190
h m s					h m s	
20 28 10·0	173	260	601·9	042		
31 3·5	173	189	601·9	100	20 38 33·1	
37 15·5	201	448	573·8	950	611″·268	
57 43·5	201	609	573·5	702		
Standard Stars.						192
21 17 9·5	39	534	737·0	529		
18 53·5	39	491	737·0	549	21 21 29·0	
23 39·5	336	599	439·8	131	6454″·875	
26 13·5	336	597	439·8	140		
Victoria and D. M. — 5°·4992. (e)						194
21 45 44·0	173	491	602·6	609		
49 51·0	173	421	602·6	662	21 50 39·6	
52 18·5	202	059	574·1	202	625″·043	
54 45·0	202	102	574·0	146		
Victoria and D. M. — 5°·4992. (e)						196
22 15 24·0	173	280	602·7	831		
18 35·5	173	240	602·8	913	22 20 5·4	
21 8·5	202	355	573·8	003	629″·949	
25 13·5	202	371	573·8	971		

I. 2–3; S. 2. Focal point 10·30.
Observed in dark field. Stars often appeared very faint, probably on account of thin clouds which were not perceptible to the naked eye. Measures consequently at times troublesome. Group 190 was completely repeated, as it was only obtained with difficulty through clouds. Became quite clear afterwards.

Sidereal time.	Scale A.	Micrometer.	Scale B.	Micrometer.	Mean of times and distance.	Rotation Number.
Victoria and D. M. — 5°·4992. (e)						191
h m s					h m s	
21 1 22·5	201	659	573·5	666		
6 49·5	201	679	573·5	600	21 7 35·8	
8 59·0	173	809	602·2	280	616″·838	
13 12·0	173	756	602·3	360		
Victoria and D. M. — 5°·4992. (e)						193
21 32 2·5	201	845	573·2	359		
34 48·5	201	848	573·2	295	21 36 21·8	
37 57·5	173	495	602·5	510	622″·162	
40 38·5	173	444	602·5	500		
Standard Stars.						195
21 59 19·5	336	972	439·7	420		
22 1 5·5	336	970	439·7	410	22 2 57·8	
4 35·5	39	902	736·9	788	6454″·717	
6 50·5	39	845	736·9	772		

Sidereal time.	Scale A.	Micrometer.	Scale B.	Micrometer.	Mean of times and distance.	Rotation Number.
1889, August 17.						
Victoria and D. M. — 5°·5006. (f) Screen I.						197
h m s					h m s	
20 42 52·9	113	076	661·7	490		
45 36·4	113	060	661·7	511	20 48 52·4	
51 21·9	261	298	513·9	145	3213″·215	
55 38·4	261	324	513·9	089		
Victoria and D. M. — 6°·5151. (a) Shutter.						199
21 14 58·9	106	521	669·4	230		
20 24·9	106	541	669·4	230	21 22 1·9	
24 9·4	269	910	507·4	765	3529″·489	
28 34·4	269	939	507·4	762		

I. 3; S. 2–3 for 197 and 200; I. 3–4; S. 3 for 198, 199. Focal point 10·30.
Observed with dark field. The whole sky covered with *cirrostratus*, which rapidly altered its position. The appearance of the stars consequently very variable. Stars at times quite invisible. The diffused appearance increased the difficulty of measuring.

Sidereal time.	Scale A.	Micrometer.	Scale B.	Micrometer.	Mean of times and distance.	Rotation Number.
Victoria and D. M. — 6°·5151. (a) Shutter.						198
h m s					h m s	
21 0 13·9	268	069	506·2	480		
3 48·9	268	046	506·2	524	21 5 6·7	
7 2·9	105	387	668·4	259	3532″·454	
9 20·9	105	409	668·4	239		
Victoria and D. M. — 5°·5006. (f) Screen I.						200
21 33 17·9	262	767	514·6	970		
35 47·9	262	808	514·6	957	21 37 39·7	
39 14·4	113	820	662·1	139	3221″·493	
41 42·4	113	797	662·1	130		

Digitized by Google

1889, AUGUST 18.

Victoria and D. M. — 5°·4985. (c) — 201

Sidereal time.	Scale A.	Micrometer.	Scale B.	Micrometer.	Mean of times and distance.	Rotation Number.
h m s					h m s	
17 52 29·5	223	337	551·6	590		
55 39·0	223	380	551·6	577	17 57 17·6	
58 49·5	150	615	623·2	951	1570″·327	
18 2 12·5	150	601	623·2	980		

Victoria and D. M. — 5°·4989. (d) — 202

Sidereal time.	Scale A.	Micrometer.	Scale B.	Micrometer.	Mean of times and distance.	Rotation Number.
h m s					h m s	
18 6 53·5	156	314	618·5	298		
9 2·0	156	370	618·5	245	18 12 23·4	
15 45·5	217	680	556·3	271	1337″·745	
17 52·5	217	662	556·3	310		

Victoria and D. M. — 5°·4989. (d) — 203

Sidereal time.	Scale A.	Micrometer.	Scale B.	Micrometer.	Mean of times and distance.	Rotation Number.
18 31 21·5	156	884	618·4	566		
34 49·0	156	931	618·4	525	18 35 22·5	
36 49·0	218	980	557·5	840	1334″·810	
38 30·5	218	970	557·5	848		

Victoria and D. M. — 5°·4985. (c) Shutter. — 204

Sidereal time.	Scale A.	Micrometer.	Scale B.	Micrometer.	Mean of times and distance.	Rotation Number.
18 43 31·5	224	033	552·4	734		
48 6·5	224	090	552·3	690	18 49 10·0	
50 26·0	151	742	624·4	573	1576″·160	
54 36·0	151	715	624·5	600		

Victoria and D. M. — 5°·5006. (f) Screen I. — 205

Sidereal time.	Scale A.	Micrometer.	Scale B.	Micrometer.	Mean of times and distance.	Rotation Number.
20 34 33·0	108	670	667·1	002		
37 56·5	108	660	667·2	003	20 39 25·3	
41 19·5	266	790	508·5	790	3439″·933	
43 52·0	266	820	508·5	755		

Victoria and D. M. — 6°·5151. (a) Shutter. — 206

Sidereal time.	Scale A.	Micrometer.	Scale B.	Micrometer.	Mean of times and distance.	Rotation Number.
20 50 43·5	263	860	510·5	819		
54 0·5	263	836	510·5	832	20 55 7·4	
56 56·5	109	746	663·2	057	3330″·919	
58 49·0	109	790	663·1	030		

Victoria and D. M. — 6°·5151. (a) Shutter. — 207

Sidereal time.	Scale A.	Micrometer.	Scale B.	Micrometer.	Mean of times and distance.	Rotation Number.
21 4 4·5	110	734	664·1	930		
6 24·5	110	768	664·1	903	21 7 34·3	
8 52·0	264	662	511·7	883	3328″·882	
10 56·0	264	640	511·6	905		

Victoria and D. M. — 5°·5006. (f) Screen I. — 208

Sidereal time.	Scale A.	Micrometer.	Scale B.	Micrometer.	Mean of times and distance.	Rotation Number.
21 15 37·0	266	120	508·3	602		
20 38·5	266	158	508·3	580	21 22 45·9	
24 8·0	108	428	667·5	440	3446″·579	
30 40·0	108	398	667·6	480		

Victoria and D. M. — 5°·5006. (f) Screen I. — 209

Sidereal time.	Scale A.	Micrometer.	Scale B.	Micrometer.	Mean of times and distance.	Rotation Number.
21 39 4·5	107	139	666·6	360		
42 20·5	107	169	666·6	360	21 43 44·9	
45 42·5	266	150	508·1	249	3449″·294	
47 52·0	266	146	508·1	268		

Victoria and D. M. — 6°·5151. (a) Shutter. — 210

Sidereal time.	Scale A.	Micrometer.	Scale B.	Micrometer.	Mean of times and distance.	Rotation Number.
21 51 38·5	263	339	510·9	225		
54 30·0	263	295	511·0	262	21 55 40·5	
57 9·5	110	167	663·7	522	3320″·648	
59 24·0	110	176	663·7	490		

Victoria and D. M. — 6°·5151. (a) Shutter. — 211

Sidereal time.	Scale A.	Micrometer.	Scale B.	Micrometer.	Mean of times and distance.	Rotation Number.
22 4 6·5	111	248	664·7	578		
6 18·5	111	298	664·7	530	22 8 31·7	
9 39·0	264	256	512·1	420	3318″·758	
14 3·0	264	163	512·1	440		

Victoria and D. M. — 5°·5006. (f) Screen I. — 212

Sidereal time.	Scale A.	Micrometer.	Scale B.	Micrometer.	Mean of times and distance.	Rotation Number.
22 22 8·0	267	568	508·8	220		
24 44·0	267	581	508·8	202	22 27 39·5	
30 5·5	108	098	667·9	829	3454″·763	
33 40·5	108	090	667·9	835		

I. 2; S.2 to No. 204: I. 2–3; S. 2–3 to No. 208: I. 2; S. 2 for Nos. 209, 210: I. 2–3; S. 2–3 for Nos. 211, 212. Focal point 10·30.
East. Observed in dark field. Stars very faint at the beginning, as the whole sky was covered with *cirrostratus*.
West. Dark field. Images *very* variable: large patches of cloud were spread over a great part of the sky at last. Also clouds not visible to the naked eye must have been often present, as at times the stars disappeared with a clear sky.

Digitized by Google

1889, AUGUST 20.

Sidereal time.	Scale A.	Micrometer.	Scale B.	Micrometer.	Mean of times and distance.	Rotation Number.
		Victoria and D. M. — 5°·4989. (d)				213
h m s					h m s	
18 4 17·3	165	685	610·2	100		
7 24·8	165	719	610·1	076	18 8 51·2	
10 10·3	209	405	565·6	666	962″·228	
13 32·3	209	452	565·6	628		
		Standard Stars.				215
18 29 10·8	39	970	737·0	977		
30 50·3	39	981	737·0	969	18 32 37·8	
34 31·3	336	104	439·7	618	6454″·873	
35 58·8	336	108	439·7	611		

I. 3; S. 2–3 for first two, 3 for last two. Focal point 10·30.
After a violent storm it became clear a short time before observations. Then again it became clouded, and rained.

Sidereal time.	Scale A.	Micrometer.	Scale B.	Micrometer.	Mean of times and distance.	Rotation Number.
		Victoria and D. M. — 5°·4989. (d)				214
h m s					h m s	
18 15 59·8	210	813	566·6	961		
18 38·8	210	770	566·6	991	18 19 42·7	
20 39·8	165	132	610·1	344	961″·442	
23 32·3	165	132	610·2	334		
		Standard Stars.				216
18 41 29·8	336	588	439·8	062		
42 46·3	336	622	439·8	062	18 44 27·9	
45 48·3	38	520	736·0	510	6454″·922	
47 47·3	38	541	736·0	452		

1889, AUGUST 25.

Sidereal time.	Scale A.	Micrometer.	Scale B.	Micrometer.	Mean of times and distance.	Rotation Number.
		Standard Stars.				218
h m s					h m s	
20 26 25·6	336	810	439·7	282		
29 13·6	336	839	439·7	262	20 30 54·4	
32 32·6	39	709	737·0	666	6454″·958	
35 25·6	39	720	737·0	667		
		Victoria and D.M. — 5°·4989. (d)				221
21 5 25·1	172	858	601·6	854		
8 10·1	172	822	601·5	850	21 10 1·1	
11 11·1	202	234	574·2	584	622″·690	
15 18·1	202	230	574·2	600		

I. 3; S. 3: I. 3-4; S. 3–4 for No. 224. Focal point 10·30.
Clouded before. Also at end disturbed by cloud. Stars very variable. Images always poor. Measures a strain. Observed in dark field.

Sidereal time.	Scale A.	Micrometer.	Scale B.	Micrometer.	Mean of times and distance.	Rotation Number.
		Victoria and D. M. — 5°·4989. (d)				220
h m s					h m s	
20 53 20·1	201	698	573·2	245		
55 15·1	201	750	573·3	202	20 57 2·1	
58 26·6	172	476	601·5	305	621″·341	
21 1 6·6	172	408	601·5	385		
		Victoria and D.M. — 5°·4989. (d)				224
21 58 46·6	202	489	574·0	358		
22 5 14·1	202	562	573·9	294	22 6 48·9	
9 13·1	173	541	602·8	170	629″·195	
14 1·6	173	524	602·8	196		

Digitized by Google

Sidereal time.		Scale A.	Micrometer.	Scale B.	Micrometer.	Mean of times and distance.	Rotation Number.
1889, August 30.							
		Standard Stars.					225 & 226
h m						h m	
18 25·2	*e*	39	559	737·0	471		
28·3	*i*	39	434	737·0	342		
		Prism rotated.					
32·5	*i*	39	441	737·0	380		
34·6	*e*	39	570	737·0	513		
38·7	*e*	39	567	737·0	519		
41·6	*i*	39	450	737·0	378		
		Prism rotated.					
44·4	*i*	39	453	737·0	417		
45·7	*e*	39	596	737·0	535	18 49·1	
49·7	*e*	336	651	439·7	130	6454″·682	
52·7	*i*	336	561	439·7	052		
		Prism rotated.					
56·2	*i*	336	562	439·7	060		
58·2	*e*	336	650	439·7	161		
19 2·3	*e*	336	692	439·7	152		
8·7	*i*	336	602	439·7	067		
		Prism rotated.					
10·7	*i*	336	609	439·7	072		
14·7	*e*	336	711	439·7	188		
		D. M. — 4°·4916 (r) and — 5°·5060 (s).					227 & 228
h m						h m	
19 43·7		318	777	455·8	392		
47·7		318	821	455·8	487		
		Prism rotated.					
51·3		318	868	455·8	462		
53·3		318	810	455·8	396		
55·9		318	806	455·8	423		
57·7		318	888	455·8	464		
		Prism rotated.					
20 1·7		318	850	455·8	501		
9·0		318	791	455·8	432	20 10·8	
12·2		55	960	719·0	780		
14·5		55	030	719·0	940	5714″·859	
		Prism rotated.					
18·3		55	032	719·0	914		
27·3		55	918	719·0	768		
29·7		55	908	719·0	810		
33·7		55	048	719·0	868		
		Prism rotated.					
37·7		55	929	719·0	794		
39·7		55	970	719·0	761		

I. 2; S. 3. Focal point 10·30.
Everything observed in dark field. The second arc observed with great difficulty.

Sidereal time.		Scale A.	Micrometer.	Scale B.	Micrometer.	Mean of times and distance.	Rotation Number.
1889, August 31.							
		δ Ophiuchi and ε Ophiuchi.					
h m						h m	
15 52·7	*i*	69	619	703·1	741		
54·7	*e*	69	742	703·1	876		
		Prism rotated.					
56·2	*e*	69	770	703·1	918		
58·7	*i*	69	650	703·1	806		
16 0·4	*i*	69	655	703·1	810		
2·7	*e*	69	788	703·1	950		
		Prism rotated.					
5·4	*e*	69	789	703·1	960		
12·6	*i*	69	677	703·1	840		
		δ Ophiuchi and ε Opniuchi—*continued*.					
h m						h m	
16 16·7	*i*	303	799	470·6	030		
19·7	*e*	303	943	470·6	142		
		Prism rotated.					
22·5	*e*	303	949	470·6	162		
24·7	*i*	303	870	470·6	089		
26·9	*i*	303	868	470·6	101		
30·2	*e*	303	958	470·6	180		
		Prism rotated.					
31·7	*e*	303	958	470·6	200		
33·7	*i*	303	887	470·6	098		

Digitized by Google

1889, AUGUST 31—*continued.*

Sidereal time.	Scale A.	Micrometer.	Scale B.	Micrometer.	Mean of times and distance.	Rotation Number.
			ζ Ophiuchi and ε Ophiuchi—*continued.*			
h m					h m	
16 47·2 *e*	304	970	471·6	188		
50·7 *i*	304	901	471·6	140		
			Prism rotated.			
53·7 *i*	304	910	471·6	163		
55·7 *e*	304	968	471·6	211		
57·2 *e*	304	962	471·6	231		
59·2 *i*	304	899	471·6	140		
			Prism rotated.			
17 0·9 *i*	304	899	471·6	155		
4·7 *e*	304	956	471·6	233		
10·7 *e*	70	839	704·1	094		
12·1 *i*	70	717	704·1	011		
			Prism rotated.			
14·3 *i*	70	712	704·1	019		
17·3 *e*	70	795	704·1	100		
19·7 *e*	70	790	704·1	090		
21·6 *i*	70	689	704·1	003		
			Prism rotated.			
23·2 *i*	70	703	704·1	998		
25·7 *e*	70	791	704·1	092		
			D. M. — 4°·4916 (r) and — 5°·5060 (s)			229 & 230
h m					h m	
18 51·7 *i*	56	308	719·9	134		
54·9 *e*	56	403	719·9	217		
			Prism rotated.			
59·3 *e*	56	420	719·9	225		
19 3·5 *i*	56	320	719·9	120		
5·7 *i*	56	331	719·9	120		
9·7 *e*	56	420	719·9	226		
			Prism rotated.			
11·9 *e*	56	398	719·9	244		
15·9 *i*	56	288	719·9	171	19 19·7	
22·7 *i*	319	131	456·9	774	5714″·526	
27·7 *e*	319	188	456·9	832		
			Prism rotated.			
29·9 *e*	319	200	456·9	822		
33·3 *i*	319	115	456·9	770		
35·7 *i*	319	120	456·9	781		
40·2 *e*	319	112	456·9	790		
			Prism rotated.			
44·7 *e*	319	202	456·9	800		
47·2 *i*	319	102	456·9	768		

I. 2; S. 3 for day observations: I. 3–2; S. 3–2 for night.

1889, SEPTEMBER 1.

Sidereal time.	Scale A.	Micrometer.	Scale B.	Micrometer.	Mean of times and distance.	Rotation Number.
			Standard Stars.			231 & 232
h m					h m	
18 29·0 *i*	39	932	737·0	973		
33·7 *e*	39	030	737·0	062		
			Prism rotated.			
37·7 *e*	39	079	737·0	121		
42·1 *i*	39	953	737·0	038		
46·1 *i*	39	944	737·0	031		
50·1 *e*	39	060	737·0	117		
			Prism rotated.			
53·0 *e*	39	069	737·0	092		
55·0 *i*	39	955	737·0	008		
			Standard Stars—*continued.*			
h m					h m	
19 0·5 *i*	336	093	439·8	632	18 56·7	
2·7 *e*	336	136	439·8	655	6454″·996	
			Prism rotated.			
5·7 *e*	336	120	439·8	670		
9·6 *i*	336	030	439·8	599		
11·7 *i*	336	052	439·8	570		
13·9 *e*	336	109	439·8	661		
			Prism rotated.			
16·7 *e*	336	109	439·8	658		
19·7 *i*	336	038	439·8	558		

Digitized by Google

1889, SEPTEMBER 1—*continued.*

Sidereal time.	Scale A.	Micrometer.	Scale B.	Micrometer.	Mean of times and distance.	Rotation Number.
		Standard Stars.				
h m					h m	
19 39·7 *e*	336	858	439·8	340		
43·7 *i*	336	730	439·8	199		
		Prism rotated.				
47·2 *i*	336	760	439·8	190		
50·3 *e*	336	888	439·8	301		
52·7 *e*	336	891	439·8	341		
54·9 *i*	336	791	439·8	220		
		Prism rotated.				
58·7 *i*	336	800	439·8	200		
20 1·6 *e*	336	905	439·8	288		

Sidereal time.	Scale A.	Micrometer.	Scale B.	Micrometer.	Mean of times and distance.	Rotation Number.
		Standard Stars—*continued.*				
h m					h m	233 & 234
20 9·0 *e*	39	772	737·0	804	20 5·2	
12·5 *i*	39	670	737·0	651	6455″·247	
		Prism rotated.				
14·7 *i*	39	688	737·0	640		
16·7 *e*	39	790	737·0	801		
19·9 *e*	39	834	737·0	822		
22·3 *i*	39	690	737·0	683		
		Prism rotated.				
28·6 *i*	39	684	737·0	708		
30·7 *e*	39	842	737·0	790		

I. 3–2 ; S. 2. Focal point 10·30.

Digitized by Google

LEIPZIG HELIOMETER OBSERVATIONS OF VICTORIA.—POSITION ANGLES.

Observer: Dr. PETER.

1889, June 7.

Sidereal Time.	Approx. Circle Reading.	Micr. I. foll. div.	Index.	Micr. I. pr. div.	Approx. Circle Reading.	Micr. II. foll. div.	Index.	Micr. II. pr. div.	Mean of Times and Circle Reading.
				Victoria and D. M. — 9°·5382. (μ) Screen II.					(3)
h m s	° ′	″	″	″	° ′	″	″	″	
17 38 33·6	155 51	230	196	226	335 57	511	111	518	h m s
42 38·5	51	240	199	236	57	519	105	523	17 45 41·9
46 55·0	59	170	198	165	336 5	453	115	460	335° 59′ 21″
54 40·5	156 4	463	198	461	11	142	116	146	
				Standard Stars.					(5)
18 23 53·3	186 7	001	215	000	6 12	278	140	276	h m s
26 47·3	7	010	215	009	12	282	140	285	18 28 33·8
30 26·3	11	220	214	216	16	491	140	498	6° 11′ 13″
33 8·3	11	224	214	219	16	497	138	500	
				Victoria and D. M. — 8°·5237. (κ) Screen I.					(7)
19 2 34·6	58 53	450	209	445	239 1	085	108	088	h m s
5 43·6	53	438	210	432	1	071	110	073	19 8 3·7
10 36·1	55	502	214	500	1	139	110	140	238° 56′ 54″
13 20·6	54	437	211	431	0·1	071	109	071	

I. 2–3; S. 2–3.
Sky quite bright; moonlight. Victoria so faint that it had to be observed in a completely dark field. Later on Victoria became somewhat brighter, so that it would have borne faint illumination of the field, but the observations were made throughout without illumination.
Standard stars observed with illumination.
Focal point 10·29. Counterpoise preceding.

1889, June 8.

				Victoria and D. M. — 9°·5382. (μ) Screen II.					(9)
h m s	° ′	″	″	″	° ′	″	″	″	
17 27 47·3	173 22	354	218	346	353 28	044	148	048	h m s
31 43·8	22	344	220	340	28	035	152	040	17 34 27·8
36 34·8	24	482	217	480	31	168	144	169	353° 27′ 2″
41 45·3	27	062	217	062	33	345	142	352	
				Standard Stars.					(11)
18 7 28·8									
10 8·8	186 9	187	225	189	6 15	460	141	460	h m s
15 55·8	9	180	219	180	15	454	139	456	18 13 4·3
18 43·8	7	054	227	049	12	316	140	319	6° 11′ 17″
	7	073	227	070	13	341	138	339	

I. 2–3; S. 2–3.
Cloudy before and after. Everything, including Standards, observed with dark field. Observing difficult. Probably faint clouds were passing frequently.
Focal point 10·34. Counterpoise preceding.

Digitized by Google

Sidereal Time.	Approx. Circle Reading.	Micr. I. foll. div.	Index.	Micr. I. pr. div.	Approx. Circle Reading.	Micr. II. foll. div.	Index.	Micr. II. pr. div.	Mean of Times and Circle Reading.
				1889, JUNE 18.					
				Victoria and D. M. — 6°·5360. (θ)					(25)
h m s	° ′	″	″	″	° ′	″	″	″	
19 27 50·8	227 8	072	227	070	47 13	323	121	322	h m s
31 8·8	7	002	230	001	11	259	126	254	19 33 24·2
34 45·8	9	138	226	138	13	392	120	392	47° 10′ 43″
39 51·3	9	150	227	149	14	401	120	402	
				Victoria and D. M. — 9°·5382. (μ) Screen I.					(26)
19 45 25·8	242 15	508	230	504	62 21	161	129	160	h m s
48 52·3	14	511	230	509	21	164	126	162	19 51 17·1
53 11·8	12	406	232	406	19	057	124	066	62° 16′ 45″
57 38·3	12	401	232	400	19	056	122	061	
				Standard Stars.					(27)
20 12 11·8	186 7	040	235	040	6 12	290	119	289	h m s
14 57·3	7	020	236	020	12	271	119	272	20 17 28·7
20 8·8	9	212	237	214	16	466	121	470	6° 11′ 9″
22 36·8	9	210	236	210	16	465	125	467	

I. 2–3 : S. 2–3. At the beginning the whole sky was clouded over ; and in the course of the observations clouds were often passing. Everything observed with dark field. During the measurement of the position angles the coming dawn was very troublesome. The observer's eye very tired at the end.
Focal point 10·29. Counterpoise preceding.

				1889, JUNE 19.					
				Victoria and D. M. — 7°·5183. (λ) Shutter.					(28)
h m s	° ′	″	″	″	° ′	″	″	″	
17 42 21·7	149 51	247	207	245	329 57	513	112	514	h m s
47 17·7	150 1	208	203	205	330 6	471	111	476	17 49 20·3
50 51·7	149 58	061	208	060	3	317	111	322	330° 0′ 24″
56 50·2	150 1	291	204	294	8	550	110	558	

I. 3 ; S. 2–3.
Cleared suddenly ; again became quite clouded, so that neither approximate measures of distance nor measures of Standard stars could be obtained. No illumination of field.
Focal point 10·29. Counterpoise preceding.

				1889, JUNE 20.					
				Standard Stars.					(30)
h m s	° ′	″	″	″	°	″			
16 33 36·3	186 5	526	206	521	6 11	216	130	212	h m s
38 58·8	5	528	205	524	11	220	129	220	16 42 24·3
43 35·8	8	070	205	068	13	360	130	361	6° 9′ 38″
53 25·8	8	078	205	080	14	368	130	367	

Digitized by Google

Sidereal Time.	Approx. Circle Reading.	Micr. I. foll. div.	Index.	Micr. I. pr. div.	Approx. Circle Reading.	Micr. II. foll. div.	Index.	Micr. II. pr. div.	Mean of Times and Circle Reading.
				1889, JUNE 20—*continued.*					
				Victoria and D. M. — 7°·5183. (λ)					(32)
h m s	° ′	″	″	″	° ′	″	″	″	
17 36 22·8	178 44	462	206	461	358 51	152	131	151	h m s
41 47·3	46	560	207	559	52	248	132	249	17 43 29·3
45 26·3	179 1	220	209	216	359 7	503	130	509	358° 57′ 4″
50 20·8	6	560	210	559	12	246	133	242	
				Victoria and — 7°·5183. (λ)					(33)
17 55 39·8	359 8	064	208	059	179 2*	300	111	300	h m s
58 54·3	14	449	210	447	21	083	110	084	18 3 35·7
18 7 51·8	17	010	210	004	22	243	111	242	179° 17′ 24″
11 56·8	21	230	211	227	26	461	108	459	
	* The observer makes a note that this reading should probably be 12 instead of 2. This suggestion adopted.								
				Standard Stars.					(34)
18 24 8·8	6 7	048	218	041	186 12	274	106	273	h m s
29 11·3	7	035	219	030	12	259	108	261	18 31 45·1
35 37·8	9	173	220	170	15	397	102	400	186° 11′ 0″
38 2·3	9	182	217	180	15	406	104	411	
				Victoria and D. M. — 7°·5183. (λ) * Screen I.					(35)
18 52 3·3	0 11	319	221	310	180 17	509	090	510	h m s
19 0 46·8	19	211	226	210	26	409	095	412	19 2 19·6
5 59·3	14	509	222	502	21	109	092	102	180° 19′ 25″
10 28·8	21	269	221	260	27	460	092	461	
				Standard Stars.					(38)
19 43 18·3	6 11	252	220	245	186 16	447	090	450	h m s
46 55·3	11	263	220	257	17	456	088	461	19 49 53·8
50 53·3	12	379	220	372	18	573	089	570	186° 14′ 24″
58 28·3	11	399	220	391	18	585	077	592	
	I. 2-3; S. 2-3. At first completely clear; at end of first measure of Standards (distance) dense clouds suddenly appeared, which however again dispersed. The brightness of the objects varied excessively within short intervals: this variation increased the difficulty of measuring and was caused probably by local mist or cloud not visible to the naked eye. Observations made without illumination of field. Focal point 10·29. Counterpoise preceding up to No. 34 inclusive afterwards following.								
				1889, JUNE 24.					
				Standard Stars.					(49)
h m s	° ′	″	″	″	° ′	″	″	″	
16 29 25·7	6 8	053	209	047	186 12	301	130	299	h m s
32 43·7	7	041	203	038	12	292	132	292	16 35 48·4
39 11·1	6	570	210	567	12	215	131	217	186° 9′ 25″
41 53·1	7	581	207	576	12	225	134	226	

Digitized by Google

Sidereal Time.	Approx. Circle Reading.	Micr. I. foll. div.	Index.	Micr. I. pr. div.	Approx. Circle Reading.	Micr. II. foll. div.	Index.	Micr. II. pr. div.	Mean of Times and Circle Reading.
				1889, JUNE 24—*continued.*					
				Victoria and D. M. — 6°·5360. (θ)					(50)
h m s	° ′	″	″	″	° ′	″	″	″	h m s
17 15 13·4	308 45	508	207	506	128 51	182	129	179	17 23 48·4
21 32·4	28	169	204	168	36	443	128	445	128° 29′ 48″
26 52·3	21	251	206	245	27	522	127	520	
31 35·3	12	351	207	346	18	019	126	023	
				Victoria and D. M. — 6°·5360. (θ)					(51)
17 34 26·8	307 58	159	209	159	128 4	430	125	430	h m s
38 36·8	42	330	206	327	127 48	597	126	001	17 40 14·5
41 54·2	18	107	207	106	23	378	126	380	127° 32′ 58″
46 0·2	1	242	209	238	7	508	122	511	
				Victoria and D. M. — 6°·5360. (θ)					(52)
17 50 39·7	126 55	490	218	488	307 1	110	117	110	h m s
57 4·1	29	205	218	200	306 34	425	115	427	17 58 50·4
18 0 31·6	41	285	219	284	47	501	112	501	306° 37′ 52″
7 6·1	16	516	220	512	21	182	114	182	
				Victoria and D. M. — 6°·5360. (θ)					(53)
18 11 9·0	126 4	445	219	440	306 9	060	111	062	h m s
23 37·0	125 19	171	219	172	305 24	386	112	387	18 24 54·0
28 27·9	124 46	555	221	551	304 51	172	115	165	305° 10′ 47″
36 21·9	24	458	220	452	29	061	110	062	
				Standard Stars.					(54)
18 51 5·3	186 9	143	220	144	6 14	401	108	402	h m s
54 17·3	9	172	218	170	15	432	106	433	18 56 18·2
58 12·3	7	042	220	038	13	295	108	294	6° 11′ 2″
19 1 37·7	7	031	220	029	13	285	105	282	

I. 2 ; S. 2. For No. 53. I. 3 ; S. 3.
Observations made in dark field. The images were very variable, probably on account of the smoke in the neighbouring gardens (Festival of St. John). A few clouds.
Focal point 10·29. Counterpoise preceding.

				1889, JUNE 25.					
				Standard Stars.					(59)
h m s	° ′	″	″	″	° ′	″	″	″	
16 32 56·3	6 11	301	232	297	186 16	489	111	490	h m s
36 5·3	11	296	233	291	16	486	110	486	16 38 22·7
40 8·8	9	170	231	169	14	365	112	367	186° 12′ 43″
44 20·3	9	191	231	189	14	383	111	387	

Digitized by Google

Sidereal Time.	Approx. Circle Reading.	Micr. I. foll. div.	Index.	Micr. I. pr. div.	Approx. Circle Reading.	Micr. II. foll. div.	Index.	Micr. II. pr. div.	Mean of Times and Circle Reading.
				1889, JUNE 25—*continued.*					
				Victoria and D. M. — 6°·5360. (θ)					(60)
h m s	° ′	″	″	″	° ′	″	″	″	
17 6 55·8	79 48	102	230	097	259 53	290	111	285	
11 1·8	41	244	231	240	45	429	114	424	h m s
15 16·8	48	093	232	091	53	282	115	281	17 13 3·3
18 58·8	38	134	231	134	43	321	110	316	259° 46′ 4″
				Victoria and D. M. — 6°·5360. (θ)					(63)
17 48 58·8	259 5	546	232	544	79 11	190	124	191	
52 5·8	4	521	231	520	11	170	124	170	h m s
54 54·8	258 50	265	232	260	78 57	507	121	510	17 53 34·3
58 17·8	46	559	230	556	52	208	120	207	78° 59′ 28″
				Victoria and D. M. — 6°·5360. (θ)					(64)
18 11 19·3	258 38	108	209	109	See end of this day's observations.*				
15 51·8	24	497	209	491					h m s
19 54·8	25	541	210	539					18 17 38·9
23 29·8	21	286	210	282	78 28	552	116	552	78° 30′ 36″
				Victoria and D. M. — 6°·5360. (θ)					(67)
19 2 39·3	77 41	298	223	295	257 48	503	102	506	
7 2·8	37	028	219	030	42	242	106	239	h m s
10 48·3	22	356	221	350	28	557	107	561	19 9 6·9
15 57·3	17	045	222	042	22	249	100	251	257° 32′ 2″
				Standard Stars.					(68)
19 29 25·3	6 9	219	229	213	186 16	430	105	432	
32 10·3	9	212	224	210	16	426	108	430	h m s
35 11·3	7	050	229	045	12	276	121	281	19 33 38·1
37 45·3	7	051	230	047	12	278	120	279	186° 11′ 12″
				Standard Stars.					(70)
19 51 19·3	186 11	200	220	201	6 16	476	122	480	
20 0 25·3	9	217	220	218	17	489	119	490	h m s
5 39·3	7	020	221	021	12	291	121	292	20 1 27·1
8 24·3	7	031	222	030	12	301	120	300	6° 11′ 23″
* In these three pointings with Micr. II. the division of the declination circle was read by mistake. The difference of the two microscopes on the position circle was determined next morning as given here.	258 38	123	222	120	78 43	401	118	405	
	24	523	219	521	32	201	119	201	
	25	528	219	524	32	208	120	207	
	38	079	219	080	43	360	120	360	

Nos. 59–60, I. 2–3 ; S. 2–3. Nos. 63–68, I. 2 ; S. 2. Nos. 70, 71, I. 3 ; S. 3.
Observed in dark field. Became clear suddenly : quality of images often changing. A few thin clouds kept passing over the sky all the night and at times disturbed the observing.
Focal point 10·29. Counterpoise following up to and including No. 63, then preceding.

Digitized by Google

Sidereal Time.	Approx. Circle Reading.	Micr. I. foll. div.	Index.	Micr. I. pr. div.	Approx. Circle Reading.	Micr. II. foll. div.	Index.	Micr. II. pr. div.	Mean of Times and Circle Reading.
				1889, JULY 7.					
				Standard Stars.					(102)
h m s	° ′	″	″	″	° ′	″	″	″	
17 27 45·7	6 11	232	231	225	186 15	419	104	416	h m s
32 18·7	11	220	230	213	15	409	109	411	17 34 2·0
35 41·7	12	348	228	341	17	536	101	537	186° 13′ 36″
40 21·7	12	362	227	356	17	556	109	558	
				Victoria and D. M. — 5°·5124. (z)					(103)
17 50 19·7	24 14	490	230	487	204 21	089	101	090	
54 48·2	12	383	231	378	18	579	098	582	h m s
59 26·7	2	390	230	384	8	589	101	592	17 57 12·2
18 4 14·2	23 55	554	230	550	1	151	103	150	204° 8′ 57″

No. 102, I. 3-2 ; S. 3–2. No. 103, I. 3–4 ; S. 2–3. Stars scarcely visible.
Observed in dark field. During almost the whole time of observation the sky was more or less clouded, and most of the pointings were injured by mist. Work discontinued on account of sky completely clouding over.
Focal point 10·28. Counterpoise following.

				1889, JULY 9.					
				Victoria and D. M. — 5°·5099. (x)					(107)
h m s	° ′	″	″	″	° ′	″	″	″	
17 11 31·1	345 43	373	207	369	165 48	006	103	008	h m s
15 32·6	39	130	202	124	43	360	108	362	17 17 35·9
18 47·1	25	530	207	527	31	164	108	162	165° 34′ 46″
24 32·6	21	284	209	284	27	514	110	515	
				Victoria and D. M. — 5°·5120. (y)					(108)
17 29 5·1	325 47	538	203	533	145 52	180	102	182	h m s
32 1·6	47	021	201	017	52	264	107	262	17 34 39·6
35 19·6	58	082	202	082	146 3	327	102	334	145° 56′ 24″
42 12·1	326 3	427	207	421	9	062	107	070	
				Victoria and D. M. — 5°·5120. (y)					(109)
17 46 51·6	146 8	108	206	106	326 13	350	099	350	h m s
49 26·1	11	275	205	270	17	511	099	515	17 51 11·2
52 51·1	4	497	208	496	11	135	100	134	326° 11′ 0″
55 36·1	8	096	205	094	13	334	100	337	
				Victoria and D. M. — 5°·5099. (x)					(110)
18 2 18·1	164 51	262	208	259	344 58	512	078	518	h m s
5 36·1	49	179	207	175	56	431	079	431	18 6 52·2
8 20·6	58	085	208	082	345 4	339	079	338	344° 56′ 47″
11 14·1	56	571	208	570	2	223	077	221	

Digitized by Google

Sidereal Time.	Approx. Circle Reading.	Micr. I. foll. div.	Index.	Micr. I. pr. div.	Approx. Circle Reading.	Micr. II. foll. div.	Index.	Micr. II. pr. div.	Mean of Times and Circle Reading.
				1889, JULY 9—*continued.*					
				Victoria and D. M. — 5°·5099. (x)					(111)
h m s	° ′	″	″	″	° ′	″	″	″	
18 18 24·1	164 51	310	224	302	344 58	534	084	539	h m s
21 47·6	49	160	224	156	56	392	082	391	18 23 43·5
24 38·6	38	080	221	078	44	316	090	309	344° 45′ 35″
30 3·6	32	352	221	351	39	580	094	590	
				Victoria and D. M. — 5°·5120. (y)					(112)
18 35 1·1	146 44	510	220	506	326 51	125	099	121	h m s
38 38·6	48	040	220	035	52	259	100	257	18 40 27·2
41 39·6	58	072	225	068	327 2	290	097	289	326° 55′ 14″
46 29·6	147 1	247	222	243	7	462	100	460	

Nos. 107, 111, 112, I. 2; S 2. Nos. 108–110, I. 2–1; S. 2–1.
Everything observed in dark field. Sky perfectly clear, but in some parts probably at times there was a thin mist.
Focal point 10·28. Counterpoise preceding up to No. 110: then following.

Sidereal Time.	Approx. Circle Reading.	Micr. I. foll. div.	Index.	Micr. I. pr. div.	Approx. Circle Reading.	Micr. II. foll. div.	Index.	Micr. II. pr. div.	Mean of Times and Circle Reading.
				1889, JULY 21.					
				Standard Stars.					(120)
h m s	° ′	″	″	″	° ′	″	″	″	
16 49 11·4	6 12	340	236	331	186 17	512	082	519	h m s
51 40·4	12	348	232	342	17	522	082	523	16 56 25·3
57 40·9	9	182	230	181	14	366	083	365	186° 13′ 28″
17 7 8·4	11	244	230	236	16	421	082	425	
				Standard Stars.					(121)
17 15 37·4	186 11	244	238	240	6 15	460	101	460	h m s
19 2·9	11	239	241	234	16	449	099	452	17 20 44·0
22 2·9	12	345	237	341	17	562	101	562	6° 13′ 39″
26 12·9	11	301	234	295	16	518	099	513	
				Victoria and D. M. — 4°·4903. (q)					(122)
17 35 37·4	133 38	142	238	140	313 43	337	089	332	h m s
39 21·9	21	303	233	298	27	490	082	493	17 41 5·5
43 23·4	132 56	572	231	569	1	162	083	161	313° 11′ 28″
45 59·4	39	195	234	190	312 44	382	085	386	
				Victoria and D. M. — 4°·4903. (q)					(123)
17 50 31·9	312 33	420	232	418	132 39	032	103	037	h m s
53 39·9	27	085	238	085	33	302	105	300	17 56 33·4
57 10·9	32	401	239	398	38	017	097	021	132° 27′ 8″
18 4 50·9	3	456	236	450	9	070	105	074	

Digitized by Google

Sidereal Time.	Approx. Circle Reading.	Micr. I. foll. div.	Index.	Micr. I. pr. div.	Approx. Circle Reading.	Micr. II. foll. div.	Index.	Micr. II. pr. div.	Mean of Times and Circle Reading.
				1889, JULY 21—*continued.*					
				Victoria and D. M. — 4°·4903. (q)					(124)
h m s	° ′	″	″	″	° ′	″	″	″	
18 17 2·4	311 31	307	232	301	131 37	515	101	523	
20 37·9	19	151	231	154	25	374	102	375	h m s
24 6·9	310 49	192	236	191	130 55	411	106	412	18 22 33·0
28 24·9	37	027	230	020	42	240	099	242	131° 6′ 50″
				Victoria and D. M. — 4°·4903. (q)					(125)
18 33 22·9	130 17	078	222	079	310 23	279	099	283	
37 30·9	8	081	226	078	13	280	099	283	h m s
39 49·9	21	316	222	313	27	512	101	511	18 38 29·0
43 12·4	8	121	221	120	14	320	098	322	310 16′ 28″
				Standard Stars.					(126)
18 53 40·9	186 12	357	225	357	6 18	583	101	589	
56 5·9	12	361	222	354	18	592	107	592	h m s
59 7·9	9·9	221	221	221	17	458	108	461	18 57 39·4
19 1 42·9	9·9	212	222	212	16	449	102	450	6° 14′ 1″
				Standard Stars.					(127)
19 5 1·4	6 9·9	239	230	233	186 16	415	090	419	
7 19·9	9·9	222	231	217	15	397	089	399	h m s
11 3·9	13	399	227	391	18	521	088	525	19 9 9·2
13 11·4	13	392	225	390	18	570	089	572	186° 13′ 55″

Nos. 120, 121, I. 3–4; S. 3–4. Nos. 122–125, I. 2·3; S. 2–3. Nos. 126, 127, I. 2–1; S. 2–1.
Observed in dark field. Became clear after heavy thunder-storm. Air very transparent, but images unsteady. At the beginning measures were scarcely possible, as the stars (in consequence of twilight) were hardly visible.
Focal point 10·28. Counterpoise following.

				1889, JULY 24. 1892.					
				Victoria and D. M. — 4°·4883. (p)					(129)
h m s	° ′	″	″	″	° ′	″	″	″	
17 33 56·7	15 21	216	211	211	195 24	439	096	440	
36 40·7	22	341	207	339	28	562	091	568	h m s
42 40·2	31	280	210	274	37	496	090	496	17 39 40·5
45 24·2	32	330	212	327	35	546	089	549	195° 29′ 9″
				Victoria and D. M. — 4°·4903. (q)					(131)
18 3 4·6	13 57	040	211	037	194 2	253	090	257	
6 0·1	57	035	210	030	2	249	091	250	h m s
8 35·1	14 1	279	211	275	7	491	091	496	18 7 54·2
13 57·1	1	260	213	253	7	470	090	475	194° 1′ 48″

No. 129. I. 3; S. 3. No. 131, I. 2–3; S. 2–3.
Observed in dark field: the first part through clouds. Amount of cloudiness very changeable, images not particularly so.
Focal point 10·28. Counterpoise preceding.

Digitized by Google

Sidereal Time.	Approx. Circle Reading.	Micr. I. foll. div.	Index.	Micr. I. pr. div.	Approx. Circle Reading.	Micr. II. foll. div.	Index.	Micr. II. pr. div.	Mean of Times and Circle Reading.
				1889, JULY 31.					
				Standard Stars.					(145)
h m s	° ′	″	″	″	° ′	″	″	″	
17 2 5·5	186 9	184	240	185	6 16	388	091	387	h m s
4 50·0	9	187	240	186	15	389	091	392	17 7 57·8
9 59·5	11	355	243	351	17	552	093	555	6° 13′ 20″
14 56·0	11	341	241	338	17	542	100	548	
				Victoria and D. M. — 4°·4861. (m) Screen II.					(147)
17 36 31·0	107 11	323	239	320	287 16	480	080	488	h m s
41 5·5	106 59	219	239	217	5	381	080	385	17 42 48·3
44 52·5	107 11	270	237	263	16	430	079	435	287° 9′ 22″
48 44·0	5	550	238	547	11	112	076	111	
				Victoria and D. M. — 4°·4861. (m) Screen II.					(148)
17 54 0·0	286 54	466	236	460	106 59	084	098	090	h m s
59 46·5	41	288	240	282	47	506	101	504	18 1 25·3
18 3 12·0	21	252	237	245	27	468	097	470	106° 33′ 25″
8 42·5	7	052	240	049	13	275	092	281	
				Standard Stars.					(150)
18 28 5·0	6 13	421	238	415	186 18	592	097	599	h m s
32 1·0	13	401	232	398	18	575	091	579	18 33 18·8
35 35·0	9	200	232	194	15	368	083	370	186° 13′ 53″
37 34·0	9	213	230	210	14	381	083	383	
				Standard Stars.					(155)
20 48 17·1	6 11	253	241	250	186 15	445	112	452	h m s
51 17·6	11	252	240	249	15	447	115	450	20 53 5·2
55 9·6	7	050	241	052	12	250	119	255	186° 11′ 13″
57 36·6	7	057	241	052	12	253	121	257	
				Victoria and D. M. — 4°·4861. (m)					(156)
21 8 15·1									
11 18·1	279 52	432	240	430	99 59	085	120	086	h m s
16 0·6	47	098	239	100	54	348	121	350	21 13 52·4
19 55·6	56	544	240	542	100 2	189	122	192	99° 53′ 45″
	47	044	240	045	99 53	292	120	300	

Nos. 145–150. I. 2 ; S. 2. Nos. 155, I. 2–3 ; S. 3–2. No. 156, I. 3 ; S. 3.
Nos. 145–150. Sky quite free from cloud ; everything observed in dark field.
Nos. 155–156. The images were considerably dimmed by mist rising from the ground. Observations made in bright field. Observing was discontinued, because weariness of the eye became noticeable.
Focal point 10·29. Counterpoise following up to No. 150 inclusive, then preceding.

Digitized by Google

Sidereal Time.	Approx. Circle Reading.	Micr. I. foll. div.	Index.	Micr. I. pr. div.	Approx. Circle Reading.	Micr. II. foll. div.	Index.	Micr. II. pr. div.	Mean of Times and Circle Reading.
				1889, August 1.					
				Victoria and D. M. — 4°·4861. (m) Screen II.					(162)
h m s	° ′	″	″	″	° ′	″	″	″	
20 30 0·4	52 31	259	230	259	232 36	462	102	469	
34 30·4	21	242	231	241	26	445	101	451	h m s
39 11·9	21	271	231	269	27	471	103	480	20 37 7·3
44 46·4	17	055	231	052	22	258	100	259	232° 24′ 52″
				Victoria and D. M. — 4°·4855. (k)					(163)
20 50 48·9	54 17	081	233	080	234 23	280	099	282	
55 19·4	24	512	235	511	31	110	098	109	h m s
58 27·9	19	153	235	150	23	351	101	354	20 57 5·4
21 3 45·4	22	391	235	391	29	585	098	593	234° 23′ 37″
				Victoria and D. M. — 4°·4855. (k)					(164)
21 12 6·9	234 37	036	231	033	54 43	270	101	278	
19 5·9	49	215	231	214	56	455	101	460	h m s
25 0·4	235 16	002	231	000	55 22	239	101	240	21 21 48·9
31 2·4	25	529	235	528	32	163	101	169	55° 4′ 58″
				Victoria and D. M. — 4°·4861. (m) Screen II.					(165)
21 40 26·4	230 41	269	234	265	50 47	494	097	500	
45 1·4	32	332	232	329	38	560	097	564	h m s
50 15·9	11	249	235	249	17	476	098	483	21 47 18·9
53 31·9	1	239	236	234	7	462	094	468	50° 23′ 39″

I. 3–2 ; S. 3–2.
Observed in dark field. The quality of the images, in addition to the difficulty of measures of small distances, delayed the observations and strained the eye considerably.
Focal point 10·29. Counterpoise preceding.

				1889, August 7.					
				Standard Stars.					(167)
h m s	° ′	″	″	°	° ′	″	″	″	
21 8 49·9	186 9	210	215	207	6 16	420	056	422	
12 49·4	9	186	213	182	15	396	062	401	h m s
20 32·9	12	362	215	361	18	570	061	581	21 16 37·0
24 15·9	12	368	211	363	18	581	061	588	6° 14′ 10″
				Victoria and D. M. — 5°·5006. (f)					(168)
21 35 42·9	167 41	249	218	252	347 47	461	070	464	
39 34·9	41	234	214	231	47	447	070	449	h m s
43 36·9	168 16	550	212	544	348 22	161	069	163	21 41 31·3
47 10·4	19	165	211	161	26	380	069	382	348° 1′ 54″

Digitized by Google

Sidereal Time.	Approx. Circle Reading.	Micr. I. foll. div.	Index.	Micr. I. pr. div.	Approx. Circle Reading.	Micr. II. foll. div.	Index.	Micr. II. pr. div.	Mean of Times and Circle Reading.
				1889, AUGUST 7—*continued.*					
				Victoria and D. M. — 5°·5006. (f)					(171)
h m s	° ′	″	″	″	° ′	″	″	″	
22 32 52·9	348 39	162	209	157	168 44	350	051	350	h m s
37 36·9	37	012	214	007	42	199	049	198	22 40 28·4
43 59·9	12	346	209	339	18	529	053	532	168° 27′ 49″
47 23·9	12	316	207	309	17	493	050	498	

I. 2–3; S. 3–2.
Everything observed in dark field. Observations to the east prevented by cloud. Clouds at the end.
Focal point 10·31. Counterpoise following.

				1889, AUGUST 10.					
				Victoria and D. M. — 5°·5006. (f) Shutter.					(172)
h m s	° ′	″	″	″	° ′	″	″	″	
17 57 53·4	159 5	519	210	519	339 11	149	069	144	h m s
18 2 37·9	2	315	215	315	8	541	073	546	18 4 18·9
6 52·9	158 52	367	213	367	338 59	590	071	592	339° 0′ 29″
9 51·4	50·1	229	211	230	57	453	070	459	
				Victoria and D. M. — 5°·4992. (e)					(173)
18 15 39·9	134 11	217	212	213	314 15	425	075	428	h m s
18 46·4	9	190	208	189	15	410	080	412	18 20 5·3
21 25·4	17	050	209	047	23	267	080	265	314° 16′ 19″
24 29·4	17	006	211	008	22	228	080	220	

No. 172, I. 3; S. 3. No. 173, I. 2–3; S. 2–3.
Everything observed in dark field. Moonlight. Earlier commencement impossible on account of clouds. Observations to the west prevented by thick clouds. Stars extremely faint, and very difficult to observe.
Focal point 10·30. Counterpoise preceding.

				1889, AUGUST 12.					
				Standard Stars.					(179)
h m s	° ′	″	″	″	° ′	″	″	″	
17 23 30·3	6 12	373	232	369	186 17	532	078	538	h m s
26 8·8	12	372	230	365	17	527	075	531	17 28 7·7
29 58·8	11	229	226	223	15	389	078	390	186° 13′ 41″
32 52·8	9	205	229	201	14	376	076	379	
				Victoria and D. M. — 5°·4992. (e)					(180)
17 44 27·3	300 43	407	229	403	120 49	018	081	020	h m s
49 42·3	39	168	222	166	44	380	088	386	17 51 0·9
53 26·3	51	292	226	288	57	503	087	505	120° 48′ 35″
56 27·8	49	190	220	188	54	408	091	410	

Digitized by Google

Sidereal Time.	Approx. Circle Reading.	Micr. I. foll. div.	Index.	Micr. I. pr. div.	Approx. Circle Reading.	Micr. II. foll. div.	Index.	Micr. II. pr. div.	Mean of Times and Circle Reading.
				1889, AUGUST 12—*continued.*					
				Victoria and D. M. — 5°·4992. (e)					(181)
h m s	° ′	″	″	″	° ′	″	″	″	
17 59 55·3	120 53	409	231	401	300 57	580	087	586	h m s
18 2 47·8	51	270	230	262	56	441	085	441	18 4 38·8
5 18·3	27	047	228	043	32	222	089	222	300° 40′ 57″
10 33·8	23	399	229	391	28	572	090	572	
				Standard Stars.					(182)
18 16 31·8	186 11	245	231	239	6 16	451	090	455	h m s
19 14·8	9	217	230	215	16	428	089	435	18 22 40·4
26 3·3	12	371	224	363	18	589	090	587	6° 14′ 10″
28 51·8	13	388	230	380	19	002	091	002	

I. 2–3 ; S. 2–3.
Observed in dark field ; stars very faint on account of twilight. Became clear immediately before observations.
Focal point 10·30. Counterpoise following.

				1889, AUGUST 25.					
				Standard Stars.					(217)
h m s	° ′	″	″	″	° ′	″	″	″	
20 14 30·6	6 12	370	226	367	186 18	550	071	560	h m s
17 36·1	12	371	218	370	18	552	070	563	20 19 7·0
20 34·6	11	220	219	214	17	400	071	405	186° 14′ 5″
23 46·6	11	238	218	232	17	419	070	428	
				Victoria and D. M. — 5°·4989. (d)					(219)
20 42 8·1	118 19	131	212	130	298 23	324	072	330	h m s
44 54·1	14	500	214	499	19	092	072	099	20 46 16·6
47 40·6	2	287	214	280	7	471	069	480	298° 11′ 15″
50 23·6	117 59	168	208	162	5	360	072	361	
				Victoria and D. M. — 5°·4989. (d)					(222)
21 17 34·1	297 32	282	208	274	117 38	510	072	510	h m s
21 7·6	28	091	206	092	34	327	072	328	21 23 7·5
24 35·6	41	482	209	479	51	109	072	109	117° 38′ 59″
29 12·6	39	201	208	199	47	434	075	439	
				Victoria and D. M. — 5°·4989. (d)					(223)
21 35 14·6	297 37	560	207	557	117 42	195	073	198	h m s
39 21·1	28	131	205	120	36	363	080	370	21 42 31·5
42 36·6	9	180	204	182	16	415	072	420	117° 20′ 49″
52 53·6	296 56	010	206	010	3	239	064	241	

Nos. 217, 219, I. 3 ; S. 3. Nos. 222, 223, I. 3–2 ; S. 3–2.
Clouded before commencement ; also at end disturbed by clouds. Stars very variable, images always poor ; measures a strain. Observed in dark field.
Focal point 10·30. Counterpoise following.

Digitized by Google

OBSERVATIONS OF THERMOMETERS AND BAROMETER.—LEIPZIG.

Date. 1889.	Thermometer in °C.			Barometer.		Date. 1889.	Thermometer in °C.			Barometer.	
	Sidereal time.	Internal.	External.	Sidereal time.	Barometer.		Sidereal time.	Internal.	External.	Sidereal time.	Barometer.
	h m	°	°	h m	mm		h m	°	°	h m	mm
June 7	17 3	+ 19·5	+ 18·1	17 6	752·5	June 24	16 25	+ 17·2	+ 16·1	16 13	753·0
	18 3	...	+ 16·5	19 6	751·8		17 12	...	+ 12·5	18 13	753·1
	18 36	...	+ 16·9	21 7	751·7		18 10	...	+ 13·8	20 13	753·1
	19 16	+ 17·2	+ 17·2	...	...		18 44	...	+ 13·9	...	...
							19 14	+ 13·8	+ 14·4	...	...
June 8	17 15	+ 21·5	+ 20·2	17 10	746·7		20 4	+ 13·0	+ 16·8	...	...
	17 45	...	+ 18·8	19 10	746·1						
	18 22	+ 19·4	+ 18·4	...	...	June 25	16 22	+ 20·5	+ 19·1	16 17	753·3
							16 47	...	+ 18·8	18 17	754·0
June 17	16 37	+ 16·2	+ 14·5	15 45	752·5		17 34	...	+ 18·0	20 17	754·0
	17 15	...	+ 14·0	17 45	752·6		18 3	...	+ 17·8	22 18	754·0
	17 49	+ 14·6	+ 13·1	19 46	752·8		18 42	...	+ 15·5	...	...
	18 25	...	+ 13·3	...	...		19 19	+ 16·1	+ 14·5	...	...
	18 52	+ 13·9	+ 13·2	...	...		19 50	...	+ 14·0	...	...
							20 22	+ 15·6	+ 14·3	...	...
June 18	17 8	+ 17·7	+ 16·2	15 49	753·2						
	17 57	...	+ 14·4	17 49	752·8	June 26	16 36	+ 20·5	+ 19·2	16 21	753·5
	18 10	+ 15·8	+ 14·8	19 50	752·6		17 8	...	+ 18·5	18 21	753·4
	18 53	...	+ 14·7	21 50	752·5		17 37	+ 19·5	+ 18·7	20 21	753·1
	19 24	+ 14·9	+ 14·1	...	...		18 8	...	+ 18·0	...	...
	20 0	...	+ 13·5	...	...		18 42	+ 18·0	+ 16·3	...	...
	20 24	...	+ 12·2	...	...						
June 19	17 35	+ 17·8	+ 16·5	15 53	750·8	June 28	17 16	+ 20·2	+ 18·5	16 29	752·0
	18 27	+ 17·0	+ 15·9	17 53	750·9		18 27	...	+ 17·3	18 29	752·1
	...	...	...	19 54	750·6		19 0	+ 18·0	+ 17·2	20 29	752·5
June 20	16 14	+ 17·3	+ 16·8	15 57	750·4						
	16 56	...	+ 15·6	17 57	750·5	June 29	17 19	+ 18·8	+ 17·9	16 33	755·1
	17 54	...	+ 15·2	19 58	750·5		17 46	...	+ 17·1	18 33	755·6
	18 41	+ 15·3	+ 14·2	21 58	750·6		18 0	...	+ 17·5	...	...
	19 41	...	+ 14·1	...	...						
	20 3	+ 14·4	+ 13·7	...	...	June 30	16 53	+ 20·0	+ 18·5	16 36	755·8
							17 23	...	+ 17·8	18 37	755·9
June 21	16 44	+ 20·6	+ 18·6	16 1	751·4		17 57	+ 18·3	+ 17·3	20 37	755·1
	17 42	...	+ 18·5	18 1	751·4		18 42	...	+ 17·0	...	...
							19 18	+ 17·3	+ 16·7	...	...
June 22	17 14	+ 18·5	+ 18·0	16 5	750·6						
	17 57	...	+ 16·8	18 5	750·5	July 6	18 52	+ 16·8	+ 16·5	19 0	748·7
	18 31	...	+ 16·1	20 6	750·5		19 54	...	+ 12·9	21 1	748·6
	18 55	...	+ 16·2	...	...		20 39	...	+ 12·5	23 1	748·6
	19 23	+ 16·2	+ 15·7	...	...		21 17	+ 13·1	+ 12·8	...	...

Digitized by Google

Date. 1889.	Thermometer in °C.			Barometer.		Date. 1889.	Thermometer in °C.			Barometer.	
	Sidereal time.	Internal.	External.	Sidereal time.	Barometer.		Sidereal time.	Internal.	External.	Sidereal time.	Barometer.
	h m	°	°	h m	mm		h m	°	°	h m	mm
July 7	17 2	+ 18·8	+ 17·0	17 4	747·4	July 31	16 45	+ 18·5	+ 16·8	16 38	745·9
	17 53	...	+ 17·3	19 4	747·6		17 17	...	+ 16·0	18 39	755·3
	18 19	...	+ 15·9	...	...		17 51	...	+ 15·7	20 39	755·9
	19 13	+ 16·3	+ 16·7	...	...		18 24	...	+ 15·3	22 39	755·9
							18 56	+ 15·4	+ 14·1	...	...
							19 54	+ 13·9	+ 13·1	...	...
							20 36	...	+ 12·1	...	...
July 9	17 17	+ 22·4	+ 20·9	15 12	750·2		21 0	...	+ 11·6	...	...
	17 45	...	+ 20·9	17 12	750·4		21 38	+ 12·1	+ 11·3	...	...
	18 14	...	+ 20·5	19 12	750·5						
	18 48	...	+ 20·2	20 13	750·5						
	18 58	+ 20·2	+ 19·0	...	...						
	20 23	+ 19·0	+ 17·5	...	...	August 1	16 46	+ 21·0	+ 19·5	16 42	753·6
	20 49	...	+ 17·0	...	...		17 16	...	+ 18·8	18 43	753·3
	21 19	+ 18·0	+ 17·5	...	...		17 47	...	+ 18·0	20 43	752·9
							18 17	+ 18·4	+ 17·4	22 43	752·5
							20 26	+ 16·6	+ 15·9	...	...
							21 6	...	+ 15·5	...	...
July 11	16 34	+ 25·2	+ 23·5	15 20	751·9		21 58	+ 15·2	+ 14·3	...	...
	17 18	...	+ 23·0	17 20	752·6						
	17 49	...	+ 21·9	19 20	752·8						
	18 15	+ 23·1	+ 22·0	...	...	August 7	20 54	+ 16·6	+ 15·0	19 6	752·5
							21 27	...	+ 13·8	21 6	752·6
							22 14	...	+ 13·8	23 7	753·1
July 21	16 48	+ 18·5	+ 16·5	15 59	746·3		22 50	...	+ 13·3	...	...
	17 12	...	+ 16·3	17 59	746·5		23 14	+ 13·4	+ 13·0	...	...
	17 48	...	+ 16·3	20 0	747·0						
	18 31	...	+ 16·5	...	...						
	18 47	...	+ 16·5	...	...	August 10	17 51	+ 19·0	+ 17·0	17 8	748·3
	19 16	+ 16·5	+ 16·2	...	...		18 26	+ 17·0	+ 15·5	19 8	748·4
							20 35	+ 13·8	+ 13·4	21 8	747·8
							21 23	+ 13·4	+ 13·0	...	...
July 24	17 1	+ 16·2	+ 15·5	16 11	748·2						
	17 49	...	+ 14·9	18 11	748·5						
	18 18	+ 14·6	+ 14·0	20 11	749·2	August 11	20 25	+ 13·7	+ 13·0	19 22	742·6
	19 21	...	+ 13·0	...	...		20 52	...	+ 12·0	21 22	742·6
	20 0	...	+ 12·9	...	..		21 20	+ 12·2	+ 11·6	...	...
						August 12	17 22	+ 17·9	+ 15·6	15 25	742·9
July 29	17 27	+ 16·8	+ 16·0	16 30	750·2		17 58	...	+ 14·9	17 26	743·1
	17 51	...	+ 15·6	18 31	750·9		18 31	+ 15·6	+ 14·5	19 26	743·7
	18 14	...	+ 14·7	...	...		20 17	+ 13·0	+ 12·6	21 26	743·7
	18 40	+ 14·9	+ 14·0	..	...		20 56	...	+ 12·3	23 27	743·7
							22 13	...	+ 12·1	...	...
							22 33	+ 12·4	+ 12·3	...	...
July 30	20 22	+ 14·3	+ 13·8	18 35	752·9						
	20 49	...	+ 13·0	20 35	753·3						
	21 14	...	+ 12·5	22 35	753·6	August 16	20 25	+ 15·2	+ 14·2	19 42	751·9
	21 56	...	+ 12·0	...	...		21 43	...	+ 11·5	21 42	752·0
	22 33	+ 12·3	+ 11·6	...	...		22 33	+ 12·5	+ 11·9	23 42	752·0

Digitized by Google

Date. 1889.	Thermometer in °C.			Barometer.		Date. 1889.	Thermometer in °C.			Barometer.	
	Sidereal time.	Internal.	External.	Sidereal time.	Barometer.		Sidereal time.	Internal.	External.	Sidereal time.	Barometer.
	h m	°	°	h m	mm		h m	°	°	h m	mm
August 17	20 37	+ 17·2	+ 17·6	19 46	749·9	August 25	20 10	+ 13·0	+ 11·2	16 17	748·3
	21 11	...	+ 16·0	21 46	749·6		20 38	...	+ 11·5	18 17	749·2
	21 45	+ 16·5	+ 16·8	...	...		21 2	...	+ 11·2	20 17	749·6
							21 33	...	+ 10·9	22 18	749·4
							22 23	+ 10·7	+ 10·0	...	...
August 18	17 46	+ 20·1	+ 18·8	17 49	752·0						
	18 6	...	+ 18·0	19 50	752·4	August 30	18 22	+ 20·9	+ 19·0	18·35	756·2
	19 0	+ 18·7	+ 17·5	21 50	752·0		19 17	+ 19·3	+ 17·7	20·35	756·2
	20 13	+ 17·2	+ 16·3	23 50	751·5		20 48	+ 17·5	+ 17·1	22·36	756·2
	21 0	...	+ 15·5	...	...						
	21 36	+ 15·6	+ 14·8	...	...	August 31	15 48	+ 30·1	+ 26·2	14 39	754·4
	22 1	...	+ 14·9	...	...		16 35	+ 27·3	+ 24·3	16 39	754·2
	22 35	+ 14·7	+ 13·6	..	...		17 29	+ 24·2	+ 22·0	18 39	754·7
							18 47	+ 21·1	+ 19·7	20 39	754·8
							19 50	+ 19·9	+ 18·9	...	...
August 20	17 53	+ 19·3	+ 17·2	17 57	744·2						
	18 26	..	+ 16·7	19 58	745·1	September 1	18 27	+ 19·4	+ 17·7	18 44	755·4
	18 52	...	+ 16·2	...	...		19 23	+ 17·7	+ 16·2	20 44	756·1
	19 2	+ 17·0	+ 16·0	...	...		20 34	+ 15·8	+ 15·0	...	...

Digitized by Google

Digitized by Google

GÖTTINGEN

OBSERVATIONS OF VICTORIA

IN

1889.

A 12363

Digitized by Google

GÖTTINGEN HELIOMETER OBSERVATIONS OF VICTORIA.—DISTANCES.

Observer: DR. SCHUR.

Sidereal Time.	Scale divisions	Micrometer.	Mean of times and distance.	No.	Sidereal Time.	Scale divisions.	Micrometer.	Mean of times and distance.	No.
1889, JUNE 11.									
Victoria and D. M. — 8°·5237. (κ) Screen I.				1	Victoria and D. M. — 9°·5382. (μ) Screen II.				2
h m s					h m s				
18 37 18	79 329	4·5740	h m s		19 5 49	75 334	3·8420	h m s	
39 34		4·5310	18 42 33·3		8 42		3·9720	19 14 2·8	
41 29	130 278	3·6790	2044″·539		12 33	135 274	4·1410	2400″·938	
48 52		3·8050			29 7		3·5430		
Focal point 21·58. Stars very faint; thick cloud and moonlight.									
1889, JUNE 18.									
Victoria and D. M. — 6°·5360. (ε)				3	Victoria and D. M. — 9°·5382. (μ) Screen II.				4
h m s					h m s				
18 35 34	149 261	1·7360	h m s		19 31 41	27 382	3·5230	h m s	
41 38		1·9960	18 52 36·0		34 10		3·6740	19 35 48·3	
19 4 33	61 347	5·0888	3497″·480		37 17	183 226	4·2680	6238″423	
7 59		5·2260			40 5		4·2760		
Focal point 21·58. Continually interrupted by cloud. Attempted position-angles in vain. Daylight and clouds.									
1889, JUNE 20.									
Standard Stars.				8a	Standard Stars.				8b
h m			h m		h m			h m	
19 10·2	24 385	1·3080	19 15·7		19 26·2	185 223	2·6325	19 33·7	
21·2	186 224	2·7245	6454″·909		41·2	24 385	1·2750	6455″·190	
I. and S. 2. Focal point 21·60.									
1889, JUNE 21.									
Victoria and D. M. — 7°·5183. (λ) Screen I.				9	Victoria and D. M. — 7°·5183. (λ)				10
h m s					h m s				
16 41 35	84 324	1·5520	h m s		17 14 49	125 284	1·2690	h m s	
47 16		1·9090	16 51 59·0					17 20 24·0	
51 47	124 283	2·1470	1619″·086		21 51	84 324	3·2040	1630″·165	
57 18		1·8040			25 45		3·2830		

Digitized by Google

Sidereal Time.	Scale divisions.	Micrometer.	Mean of times and distance.	No.	Sidereal Time.	Scale divisions.	Micrometer.	Mean of times and distance.	No.
1889, JUNE 21—*continued.*									
Victoria and D. M. — 6°·5360 (θ)				13	**Victoria and D. M. — 6°·5360. (θ)**				14
h m s			h m s		h m s			h m s	
18 52 47	82 326	1·8880			19 6 18	127 282	2·7180		
56 34		1·7030	18 57 52·0		8 19		2·9530	19 9 25·8	
59 45	127 282	2·5310	1776″·292		10 18	83 326	5·0430	1771″·219	
19 2 22		2·7210			12 48		4·9620		
Focal point 21·6. Air often very damp: frequently long delays in the pointings. Stars very faint.									
1889, JUNE 22.									
Victoria and D. M. — 7°·5183. (λ) Screen I.				17	**Victoria and D. M. — 6°·5360. (θ)**				18
h m s			h m s		h m s			h m s	
19 0 1	77 331	3·7580			19 28 52	119 288	4·7370		
4 33		3·8620	19 5 21·0		33 4		4·9700	19 34 56·0	
6 56	132 276	4·2460	2198″·521		37 8	89 318	3·2329	1191″·316	
9 54		4·1880			40 40		2·9480		
Victoria and D. M. — 6°·5360. (θ)				19	**Victoria and D. M. — 7°·5183. (λ)**				20
19 45 51	90 319	2·7240			20 15 3	133 277	1·3930		
49 59		2·4040	19 50 50·3		18 54	133 270	5·1280	20 21 0·5	
52 29	120 290	1·5600	1184″·806		23 43	77 332	2·6860	2229″·090	
55 2		1·6920			26 22		2·9140		
Focal point 21·6. Long breaks from clouds. Stars at last in thick cloud. Dawn.									
1889, JUNE 24.									
Victoria and D. M. — 6°·5360. (θ)				21	**Victoria and D. M. — 6°·5360. (θ)**				22
h m s			h m s		h m s			h m s	
17 2 6	111 298	4·9940			17 19 19	99 319	3·2099		
6 40		4·9130	17 8 11·5		23 2		3·1720	17 24 32·3	
9 14	99 310	3·2000	471″·316		26 19	111 298	4·7269	472″·492	
14 46		3·1980			28 47		4·6930		
Standard Stars.				24	**Standard Stars.**				25
18 39 0	185 223	2·8700	h m 18 46·5		18 50 0	24 385	1·2465	h m 19 5·5	
54 0	24 385	1·4005	6454″·629		19 12 0	185 223	2·7285	6454″·569	
L. and S. 2-3 Focal point 21·60.									

Digitized by Google

Sidereal Time.	Scale divisions.	Micrometer.	Mean of times and distance.	No.	Sidereal Time.	Scale divisions.	Micrometer.	Mean of times and distance.	No.
1889, JUNE 25.									
Victoria and D. M. — 6°·5360. (θ)				27	Victoria and D. M. — 6°·5360. (θ)				28
h m s					h m s				
17 10 27	94 314	3·9120	h m s		17 29 3	115 293	3·4110	h m s	
13 10		3·9440	17 16 1·3		32 24		3·3100	17 33 46·0	
17 13	115 293	3·7820	840″·915		35 32	94 314	4·8120	847″·777	
23 15		3·7520			38 5		4·9780		
Standard Stars.				31*a*	Standard Stars.				31*b*
			h m					h m	
18 44 0	185 223	2·8510	18 50·5		18 59 0	24 385	1·2380	19 4·5	
57 0	24 385	1·3945	6454″·694		19 10 0	185 223	2·7925	6454″·205	
I. and S. 2–3. Focal point 21·58. At 18h 17m sky very misty.									
1889, JUNE 26.									
Victoria and D. M. — 5°·5138. (ϵ) Screen III.				33	Victoria and D. M. — 7°·5183. (λ) Screen I.				34
h m s					h m s				
16 59 16	43 367	1·6080	h m s		17 20 5	163 247	2·3880	h m s	
17 1 55		1·4540	17 4 36·0		23 5		2·2310	17 25 58·8	
7 6	167 242	2·2750	4977″·316		28 49	47 362	1·7450	4618″·593	
10 7		2·4700			31 56		1·7630		
Victoria and D. M. — 7°·5183. (λ) Screen I.				35	Victoria and D. M. — 5°·5138. (ϵ) Screen III.				36
17 45 11	47 362	2·5690	h m s		18 9 12	166 241	4·7150	h m s	
50 24		2·6740	17 51 32·3		12 29		4·7980	18 14 5·3	
53 55	163 246	4·7100	4631″·601		16 7	43 366	2·7830	4951″·352	
56 39		4·4380			18 33		2·6420		
I. and S. 3. Focal point 21·60. Air damp and unsteady : observations interrupted by cloud.									
1889, JULY 4.									
Victoria and D. M. — 4°·4984. (β)				37	Victoria and D. M. — 6°·5339. (δ)				38
h m s					h m s				
17 0 54	58 351	2·3610	h m s		17 15 51	155 252	4·6370	h m s	
3 16		2·3820	17 4 39·3		19 4		4·5250	17 21 14·3	
6 14	151 257	1·2460	3746″·735		23 41	53 354	3·3340	4075″·172	
8 13		1·2490			26 21		3·4420		

Digitized by Google

Sidereal Time.	Scale divisions.	Micrometer.	Mean of times and distance.	No.	Sidereal Time.	Scale divisions.	Micrometer.	Mean of times and distance.	No.
1889, JULY 4—*continued*.									
Victoria and D. M. — 6°·5339. (δ)				39	Victoria and D. M. — 4°·4934. (β)				40
h m s					h m s				
17 30 11	54 355	3·6340	h m s		17 42 51	152 258	2·2710	h m s	
32 47		3·7020	17 34 1·5		46 20		2·3490	17 47 31·3	
35 26	156 253	3·6420	4081″·348		48 46	58 350	5·0780	3734″·799	
37 42		3·6340			52 8		5·0190		
I. and S. 2. Focal point 21·60.									
1889, JULY 9.									
Victoria and D. M. — 5°·5120. (y)				47	Victoria and D. M. — 5°·5099. (x)				48
h m s					h m s				
21 16 15	82 327	3·3900	h m s		21 37 24	120 289	4·7760	h m s	
19 23		3·3780	21 22 58·5		39 46		4·8900	21 41 40·8	
26 47	128 281	3·8260	1838″·344		42 56	90 319	2·5390	1187″·931	
29 29		3·7400			46 37		2·2480		
Victoria and D. M. — 5°·5099. (x)				49					
21 50 29	90 319	2·2240							
53 49		1·9870	21 55 30·5						
57 15	120 290	1·7050	1181″·813						
22 0 29		1·8280							
Focal point 21·60. At 22h bright daylight: stars too faint.									
1889, JULY 10.									
Victoria and D. M. — 5°·5099. (x)				53	Victoria and D. M.— 5°·5099. (x)				54
h m s					h m s				
20 43 28	96 314	1·9040	h m s		21 2 27	114 295	2·0180	h m s	
47 20		1·8350	20 48 59·8		6 24		2·0680	21 8 8·3	
51 35	114 295	1·8220	740″·211		10 7	95 313	1·3560	736″·537	
53 36		1·9020			13 53		1·2760		
Standard Stars.				55a	Standard Stars.				55b
h m			h m		h m			h m	
21 26·3	24 384	5·0160	21 32·3		21 42·3	185 223	2·5470	21 46·3	
38·3	185 223	2·4485	6454″·806		50·3	24 384	5·1070	6454″·766	
Focal point 21·60.									

Digitized by Google

Sidereal Time.	Scale divisions	Micrometer.	Mean of times and distance.	No.
1889, JULY 11.				
Victoria and D. M. — 5°·5099. (x)				56
h m s			h m s	
17 44 8	95 315	2·4340		
48 4		2·6190	17 49 13·5	
50 30	116 294	5·0140	828″·135	
54 12		4·8340		
Victoria and D. M. — 4°·4960. (w)				57
h m s			h m s	
19 14 31	118 291	1·7780		
19 27		1·9320	19 20 35·5	
22 28	92 318	1·5280	1058″·249	
25 56		1·4180		
Victoria and D. M. — 4°·4960. (w)				58
h m s			h m s	
19 31 12	91 316	5·1900		
34 24		4·9790	19 36 9·8	
37 47	117 290	2·8080	1051″·035	
41 16		2·9790		
Victoria and D. M. — 5°·5099. (x)				59
h m s			h m s	
19 57 15	115 292	5·1900		
20 0 53		5·0100	20 3 43·5	
5 42	93 314	2·9140	869″·292	
11 4		2·9480		

I. and S. for first set 3; afterwards 2. Focal point 21·70. Moonlight and cirrus cloud. Constant interruption from cloud. Later on a heavy thunderstorm.

Sidereal Time.	Scale divisions	Micrometer.	Mean of times and distance.	No.
1889, JULY 16.				
Victoria and D. M. — 4°·4936. (u)				60
h m s			h m s	
18 53 23	102 307	1·8120		
57 21		1·5860	19 5 41·0	
19 13 43	107 301	2·7310	214″·385	
18 17		2·9300		

Focal point 21·70.
Continual interruption from cloud, then completely clouded.
Pendulum-rod of clock-work broken.

Sidereal Time.	Scale divisions	Micrometer.	Mean of times and distance.	No.
1889, JULY 31.				
Victoria and D. M. — 4°·4861. (m) Screen III.				61
h m s			h m s	
19 7 0	95 312	2·4390		
8 47		2·3830	19 10 20·5	
11 33	113 295	1·2600	705″·955	
14 2		1·2280		
Victoria and D. M. — 4°·4861. (m) Screen III.				64
h m s			h m s	
20 0 34	114 296	2·0300		
2 54		1·9690	20 4 38·0	
6 22	96 313	1·3610	697″·117	
8 42		1·4120		
Standard Stars.				65*a*
h m			h m	
20 37·2	24 384	5·1085	20 42·2	
47·2	185 223	2·3960	6455″·525	
Standard Stars.				65*b*
h m			h m	
21 22·2	185 223	2·4555	21 26·2	
30·2	24 384	5·1225	6455″·301	

Digitized by Google

Sidereal Time.	Scale divisions.	Micrometer.	Mean of times and distance.	No.	Sidereal Time.	Scale divisions.	Micrometer.	Mean of times and distance.	No.
1889, JULY 31—*continued*.									
Standard Stars.				67*a*	Standard Stars.				67*b*
h m 22 1·2 9·2	24 384 185 223	5·0135 2·4795	h m 22 5·2 6454″·637		h m 22 51·2 57·2	185 223 24 384	2·6280 4·9185	h m 22 54·2 6453″·419	
Victoria and D. M. — 4°·4861. (m) Screen III.				69					
h m s 23 12 11 ... ... 20 11	97 313 114 296 	3·1000 3·0210 4·7510 4·5580	h m s 23 16 11·0 672″·233		No. 69 is rejected because the time is not noted for each pointing.				
I. and S. 2. Focal point 21·60.									
1889, AUGUST 1.									
Victoria and D. M. — 4°·4855. (k)				71	Victoria and D. M. — 4°·4861. (m) Screen III.				72
h m s 17 57 55 18 0 8 3 37 5 22	95 315 116 294 	3·6890 3·4890 4·1190 4·0790	h m s 18 1 45·5 83″·756		h m s 18 11 36 15 11 17 41 20 37	114 295 96 313 	4·4780 4·4640 3·3220 3·3710	h m s 18 16 16·3 714″·578	
Victoria and D. M. — 4°·4861. (m) Screen III.				73	Victoria and D. M. — 4°·4855. (k)				74
18 24 56 28 20 30 38 33 19	95 312 113 294 	3·4420 3·4120 4·2000 4·1570	h m s 18 29 18·3 716″·367		18 42 24 44 59 48 42 51 10	115 293 94 314 	4·9460 5·0760 2·6020 2·5250	h m s 18 46 48·8 827″·895	
I. and S. 2–3. Focal point 21·60. Air variable: stars at times very faint. Clouded later on.									
1889, AUGUST 5.									
Victoria and D. M. — 4°·4843. (g)				75	Victoria and D. M. — 4°·4843. (g)				78
h m s 18 53 45 58 45 19 1 35 5 4	96 313 114 295 	3·2880 3·2090 4·4890 4·4700	h m s 18 59 47·3 714″·046		h m s 19 51 6 54 18 58 33 20 1 26	113 294 95 312 	5·0680 5·1510 2·4960 2·4490	h m 19 56 20·8 706″·952	
Standard Stars.				79*a*	Standard Stars.				79*b*
20 20 0 31 0	24 385 185 223	1·1650 2·4245	h m 20 25·5 6455″·687		21 13 0 21 0	185 223 24 384	2·5090 5·1285	h m 21 17·0 6455″·066	
I. and S. 2–3. Focal point 21·60. Images steady, but always veiled by clouds.									

Digitized by Google

Sidereal Time.	Scale divisions.	Micrometer.	Mean of times and distance.	No.	Sidereal Time.	Scale divisions.	Micrometer.	Mean of times and distance.	No.
					1889, AUGUST 6.				
Victoria and D. M. — 5°·5006. (f) Screen I.				81					
h m s									
21 38 8	96 312	1·3810	h m s						
41 39		1·2020	21 43 29·8						
46 5	113 296	2·4600	654″·243						
48 7		2·4960							
I. and S. 2–3. Focal point 21·60. Through cloud : stars very faint. Clouds getting constantly thicker.									
					1889, AUGUST 8.				
Victoria and D. M. — 5°·5006. (f)				82	Victoria and D. M. — 5°·5006. (f)				85
					h m s				
21 21 6	109 301	1·5610	h m s		21 19 44	101 308	2·0240	h m	
23 41		1·5640	21 25 24·8		23 35		2·0460	22 25 1·3	
26 58	101 308	2·0960	302″·394		26 36	108 300	1·6740	302″·201	
29 54		1·9530			30 10		1·5520		
Standard Stars.				86a					
h m			h m						
22 46·2	24 384	4·9770	22 50·7						
55·2	185 223	2·6835	6453″·436						
I. and S. 2. Focal point 21·60. Stars at last low and diffused.									
					1889, AUGUST 10.				
Victoria and D. M. — 5°·4992. (e)				91	Victoria and D. M. — 5°·5006. (f) Screen I.				92
h m s					h m s				
21 34 45	87 320	2·1890	h m s		21 51 57	118 290	4·4110	h m s	
39 16		2·0980	21 40 51·0		55 40		4·3140	21 58 51·5	
43 26	121 287	1·5970	1343″·005		59 33	91 317	3·2330	1075″·234	
45 57		1·5580			22 8 16		3·5150		
Focal point 21·60. Clouds getting thicker : last distance (22h 8m) measured without the prism. No. 92 : first reading : scale B was read 291 : has been altered.									

Digitized by Google

Sidereal Time.	Scale divisions.	Micrometer.	Mean of times and distance.	No.	Sidereal Time.	Scale divisions.	Micrometer.	Mean of times and distance.	No.
1889, August 11.									
Victoria and D. M. — 5°·5006. (f) Screen I.				93					
h m s			h m s						
20 31 28	87 322	2·0810	20 35 52·3						
34 49		2·1790	1424″·315						
38 1	123 287	1·3460							
39 11		1·2600							
Focal point 21·60.									
1889, August 16.									
Victoria and D. M. — 5°·4992 (e)				97	Victoria and D. M. — 5°·4992. (e)				98
h m s			h m s		h m s			h m s	
21 57 23	97 312	2·4740	22 2 24·8		22 15 37	113 296	4·8270	22 19 27·0	
22 1 14		2·3360	627″·630		18 22		4·6010	6312″·475	
3 58	113 296	4·9750			20 31	97 312	2·9870		
7 4		4·8520			23 18		2·8740		
Standard Stars.				99a	Standard Stars.				99b
h m			h m		h m			h m	
22 33·2	24 384	5·0635	22 36·2		22 44·2	186 224	2·5565	22 49·2	
39·2	186 224	2·6175	6454″·209		54·2	24 384	4·9940	6454″·169	
I. and S. 2-3. Focal point 21·60. Some water from the imperfectly opened shutter has dropped on to the telescope and penetrated between the lenses of the object-glass. These must be taken to pieces on the conclusion of the Victoria observations.									
1889, August 17.									
Victoria and D. M. — 5°·4985. (c)				100	Victoria and D. M. — 5°·4989. (d)				101
h m s			h m s		h m s			h m s	
18 43 59	87 321	5·4900	18 48 4·0		19 3 31	123 284	3·1510	19 8 27·5	
46 14		5·4830	1416″·865		5 58		3·2250	1526″·436	
49 17	122 286	2·2070			10 31	85 322	4·4640		
52 46		2·0800			13 50		4·3980		
Victoria and D. M. — 5°·4989. (d)				102	Victoria and D. M. — 5°·4985. (c)				103
19 20 16	86 323	4·2250	19 24 53·3		19 42 51	123 287	1·6710	19 46 13·3	
22 55		4·1450	1524″·184		44 54		1·6040	1422″·078	
25 56	124 285	3·3620			47 8	87 322	1·9630		
30 26		3·4390			50 0		1·9920		
I. and S. 2-3. Focal point 21·60. Thunderstorm at 20h.: heavy rain.									

Digitized by Google

Sidereal Time.	Scale divisions.	Micrometer.	Mean of times and distance.	No.	Sidereal Time.	Scale divisions.	Micrometer.	Mean of times and distance.	No.
1889, August 20.									
Victoria and D. M. — 5°·4989. (d)				104	Victoria and D. M. — 5°·4989. (d)				105
h m s					h m s				
18 26 46	93 316	3·6840	h m s		18 38 36	116 291	4·1630	h m s	
30 44		3·5580	18 31 9·8		42 26		4·1740	18 43 37·5	
32 31	117 292	4·0290	958″·133		45 37	92 315	3·5140	956″·644	
34 38		3·9910			47 51		3·4240		
Standard Stars.				106*a*	Standard Stars.				106*b*
h m			h m		h m			h m	
19 1·9	24 384	5·0355	19 6·4		19 14·9	185 223	2·5050	19 24·9	
10·9	186 224	2·4495	6454″·909		34·9	24 384	5·2150	6455″·513	
Victoria and D. M. — 6°·5158. (b)				107	Victoria and D. M. — 5°·4992. (e)				108
h m s					h m s				
21 26 23	69 341	2·2030	h m s		21 45 20	124 284	4·6380	h m s	
29 57		1·9320	21 30 59·8		47 58		4·6210	21 49 48·0	
32 27	141 268	1·6780	2903″·159		51 34	86 324	3·0880	1552″·640	
35 12		1·5220			54 20		3·1030		
Victoria and D. M. — 5°·4992. (e)				109	Victoria and D. M. — 6°·5158. (b)				110
22 7 38	85 323	3·2330	h m s		22 34 14	141 268	2·8700	h m s	
14 7		3·2960	22 15 56·3		36 54		2·8980	22 38 46·0	
19 27	124 284	4·1800	1556″·054		39 44	68 339	4·7640	2889″·383	
22 33		4·0380			44 12		4·4320		
I. and S. 2–3. Focal point 21·60. Numerous interruptions from cloud.									
1889, August 22.									
Victoria and D.M. — 5°·4989. (d)				111					
h m s									
21 38 56	96 311	5·0560	h m s						
56 15		4·8590	21 53 55·8						
59 20	113 296	2·9460	610″·445						
22 1 12		2·8460							
I. and S. 3. Focal point 21·60. Continual interruptions from cloud. First scale reading altered from 97 to 96.									
1889, August 25.									
Victoria and D.M. — 5°·4989. (d)				113	Victoria and D.M. — 5°·4989. (d)				116
h m s					h m s				
20 42 30	97 312	1·8580	h m s		22 28 46	97 312	3·1260	h m s	
46 44		1·8500	20 53 46·8		33 45		3·0290	22 38 46·8	
54 15	112 296	1·6570	621″·853		43 13	113 296	4·4310	633″·720	
21 11 38		1·3610			49 23		4·3000		
I. and S. 3. Focal point 21·60. Continual interruptions from cloud. Sky very misty. No. 116. Stars very faint: last two pointings without the prism.									

Digitized by Google

GÖTTINGEN HELIOMETER OBSERVATIONS OF VICTORIA.—POSITION ANGLES.

Observer—DR. SCHUR.

1889, June 20.

Sidereal Time.	Microscope I. Circle.	Microscope I. Index.	Microscope II. Circle.	Microscope II. Index.	Mean of Times and Circle Readings.
Victoria and D. M. — 7°·5183. (λ) Screen I. (5)					
h m s	′ ″	′ ″	′ ″	′ ″	
16 48 26	5 54·1	9 24	4 57·8	8 24	h m s
55 38	2 3·1	9 26	1 3·8	8 24	16 57 34·3
17 0 47	7 36·6	9 26	6 33·3	8 25	° ′ ″
5 26	0 41·1	9 25	9 39·8	8 24	89 19 39
Standard Stars. (7a)					
17 58 3	9 51·1	9 39	9 28·8	8 24	h m
18 8 3	0 55·1	9 43	0 22·3	8 13	18 14·5
23 3	7 5·1	9 44	6 29·3	8 14	° ′ ″
28 3	7 4·1	9 44	6 20·3	8 14	277 9 28

Sidereal Time.	Microscope I. Circle.	Microscope I. Index.	Microscope II. Circle.	Microscope II. Index.	Mean of Times and Circle Readings.
Victoria and D. M. — 7°·5183. (λ) Screen I. (6)					
h m s	′ ″	′ ″	′ ″	′ ″	
17 15 52	3 16·1	9 39	3 9·3	8 26	h m s
24 35	7 41·1	9 33	6 34·3	8 24	17 27 38·3
32 0	6 53·1	9 24	6 41·3	8 23	° ′ ″
38 6	0 46·6	9 31	0 22·3	8 20	269 47 51
Standard Stars. (7b)					
18 35 2	9 49·1	9 35	8 24·3	8 20	h m
40 2	9 30·1	9 35	8 4·3	8 8	18 45·2
48 2	1 1·6	9 38	9 28·8	8 17	° ′ ″
57 2	1 5·1	9 36	9 35·8	8 8	97 10 43

I. and S. 2. Focal point 21·60. Axis following.

1889, June 21.

Victoria and D. M. — 7°·5183. (λ) Screen I. (11)					
h m s	′ ″	′ ″	′ ″	′ ″	
17 31 17	3 37·6	9 16	2 59·8	8 21	h m s
36 34	5 30·1	9 20	4 46·8	8 23	17 39 23·8
42 16	5 10·1	9 18	4 24·8	8 16	° ′ ″
47 28	8 58·1	9 20	8 4·3	8 22	108 1 37
Victoria and D. M. — 6°·5360. (θ) (15)					
19 17 17	3 18·1	9 24	2 6·8	8 4	h m s
22 36	2 55·1	9 26	1 46·3	8 5	19 24 57·5
28 5	9 3·1	9 24	7 53·3	8 5	° ′ ″
31 52	6 43·6	9 27	5 34·3	8 3	126 26 11

Victoria and D. M. — 7°·5183. (λ) Screen I. (12)					
h m s	′ ″	′ ″	′ ″	′ ″	
18 1 28	8 36·1	9 26	8 19·8	8 17	m
6 26	9 43·1	9 34	9 31·3	8 16	18 8 55·8
11 10	1 46·1	9 18	1 29·8	8 12	° ′ ″
16 39	3 8·1	9 24	2 53·8	8 16	288 16 52
Victoria and D. M. — 6°·5360. (θ) (16)					
19 40 14	6 5·6	9 32	5 14·3	8 4	h m s
44 59	4 43·1	9 30	3 48·3	8 4	19 47 10·5
49 19	3 36·1	9 34	2 40·3	8 0	° ′ ″
54 10	3 22·1	9 28	2 21·8	8 4	306 20 12

Focal point 21·60. Axis following.
Often very misty: frequently long delays in the pointings. Stars very faint.

Digitized by Google

1889, JUNE 24.

Sidereal Time.	Microscope I. Circle.	Microscope I. Index.	Microscope II. Circle.	Microscope II. Index.	Mean of Times and Circle Readings.
	Victoria and D. M. — 6°·5360. (θ)				(23)
h m s	′ ″	′ ″	′ ″	′ ″	
17 37 46	7 41·6	9 16	6 29·8	8 16	h m s
42 58	0 24·6	9 16	9 14·8	8 14	17 45 50·5
49 19	5 12·1	9 20	3 57·3	8 14	° ′ ″
53 19	4 38·1	9 20	3 22·3	8 16	37 40 7
	Standard Stars.				(26*a*)
19 15 0	0 43·1	9 32	9 10·8	8 7	h m
	0 39·6	9 30	9 1·8	8 4	19 23·0
	9 19·6	9 34	7 29·3	7 57	° ′ ″
31 0	9 5·1	9 34	24·3	8 0	97 10 20

I. and S. 2–3. Focal point 21·60. Axis following.

Sidereal Time.	Microscope I. Circle.	Microscope I. Index.	Microscope II. Circle.	Microscope II. Index.	Mean of Times and Circle Readings.
	Victoria and D. M. — 6°·5360. (θ)				(24)
h m s	′ ″	′ ″	′ ″	′ ″	
17 59 28	3 59·1	9 23	3 49·3	8 17	h m s
18 6 3	9 45·6	9 21	9 36·3	8 16	18 8 54·5
12 47	5 45·1	9 21	5 33·8	8 14	° ′ ″
17 20	2 11·1	9 24	1 56·8	8 14	216 21 31
	Standard Stars.				(26*b*)
19 39 0	7 51·1	9 38	7 4·3	8 4	h m
	8 15·6	9 34	7 26·8	8 3	19 47·0
	1 13·1	9 36	9 38·3	8 0	° ′ ″
55 0	1 0·1	9 42	0 9·3	7 57	277 10 8

1889, JUNE 25.

Sidereal Time.	Microscope I. Circle.	Microscope I. Index.	Microscope II. Circle.	Microscope II. Index.	Mean of Times and Circle Readings.
	Victoria and D. M. — 6°·5360. (θ)				(29)
h m s	′ ″	′ ″	′ ″	′ ″	
17 45 8	9 30·6	9 23	9 9·3	8 17	h m s
49 38	3 15·1	9 20	2 56·3	8 16	17 52 11·0
54 42	8 2·1	9 20	7 36·8	8 14	° ′ ″
59 16	5 8·1	9 22	4 43·8	8 14	169 42 30
	Standard Stars.				(32*a*)
19 11 0	1 5·6	9 28	9 34·3	8 4	h m
	1 4·1	9 26	9 36·3	8 3	19 17·0
	9 10·6	9 34	7 33·8	8 6	° ′ ″
23 0	9 34·6	9 24	8 0·8	8 4	97 10 42

I. and S. 2–3. Focal point 21·58. Axis following.
At 18h 17m sky very misty.

Sidereal Time.	Microscope I. Circle.	Microscope I. Index.	Microscope II. Circle.	Microscope II. Index.	Mean of Times and Circle Readings.
	Victoria and D. M. — 6°·5360. (θ)				(30)
h m s	′ ″	′ ″	′ ″	′ ″	
18 7 36	8 59·1	9 24	8 5·3	8 16	h m s
12 38	5 40·1	9 24	4 45·3	8 16	18 14 49·3
17 40	3 6·6	9 24	2 12·3	8 14	° ′ ″
21 23	9 34·1	9 29	8 41·3	8 12	349 20 4
	Standard Stars.				(32*b*)
19 29 0	7 51·1	9 34	7 6·3	8 4	h m
	8 28·1	9 34	7 40·8	8 4	19 36·5
	0 40·1	9 34	9 50·3	8 6	° ′ ″
44 0	1 3·1	9 34	0 10·3	8 7	277 10 17

1889, JULY 9.

Sidereal Time.	Microscope I. Circle.	Microscope I. Index.	Microscope II. Circle.	Microscope II. Index.	Mean of Times and Circle Readings.
	Victoria and D. M. — 5°·5120. (y)				(41)
h m s	′ ″	′ ″	′ ″	′ ″	
17 4 11	5 46·8	9 13	4 35·2	8 17	h m s
10 21	0 43·8	9 24	9 30·7	8 20	17 13 22·0
17 18	9 16·8	9 24	8 0·2	8 20	° ′ ″
21 38	2 1·3	9 26	0 48·2	8 23	56 44 59

Sidereal Time.	Microscope I. Circle.	Microscope I. Index.	Microscope II. Circle.	Microscope II. Index.	Mean of Times and Circle Readings.
	Victoria and D. M. — 5°·5099. (x)				(42)
h m s	′ ″	′ ″	′ ″	′ ″	
17 31 59	5 28·8	9 28	4 8·7	8 24	h m s
35 58	2 32·8	9 26	1 16·7	8 24	17 38 21·8
40 51	7 38·8	9 28	6 24·2	8 24	° ′ ″
44 39	5 9·3	9 28	3 53·2	8 24	76 10 37

Digitized by Google

1889, JULY 9—*continued.*

Victoria and D. M. — 5°·5099. (x) (43)

Sidereal Time.	Microscope I. Circle.	Microscope I. Index.	Microscope II. Circle.	Microscope II. Index.	Mean of Times and Circle Readings.
h m s	′ ″	′ ″	′ ″	′ ″	
17 51 6	5 9·8	9 29	4 54·2	8 19	h m s
54 50	2 52·8	9 29	2 39·2	8 23	18 3 13·8
18 11 2	6 27·3	9 29	6 10·2	8 17	° ′ ″
15 57	3 22·8	9 30	2 59·7	8 16	255 50 25

Victoria and D. M. — 5°·5120. (y) (44)

Sidereal Time.	Microscope I. Circle.	Microscope I. Index.	Microscope II. Circle.	Microscope II. Index.	Mean of Times and Circle Readings.
h m s	′ ″	′ ″	′ ″	′ ″	
18 29 16	1 1·8	9 30	0 39·7	8 16	h m s
34 3	5 25·8	9 32	4 58·7	8 12	18 37 7·0
39 47	3 54·8	9 26	8 34·2	3 18	° ′ ″
45 22	8 51·8	9 33	3 27·2	3 26	237 55 42

Standard Stars. (45*a*)

19 13 0	8 37·8	9 42	7 49·2	8 12	h m
	8 31·3	9 46	7 33·2	8 6	19 20·0
	0 11·8	9 40	9 20·2	8 7	° ′ ″
27 0	0 9·8	9 39	9 16·2	8 10	277 10 0

Standard Stars. (45*b*)

19 34 0	0 46·8	9 38	9 3·7	8 11	h m
	0 39·8	9 42	9 0·2	8 6	19 40·0
	0 4·8	9 36	8 17·7	8 4	° ′ ″
46 0	9 58·8	9 41	8 15·7	8 6	97 10 38

Standard Stars. (46*a*)

19 58 0	8 1·8	9 49	5 55·7	8 13	h m
	8 1·8	9 46	6 2·7	8 13	20 5·0
	8 17·8	9 44	6 22·2	8 10	° ′ ″
20 12 0	8 39·8	9 46	6 39·7	8 14	97 8 14

Standard Stars. (46*b*)

20 19 0	8 32·3	9 46	7 22·2	8 12	h m
	8 37·3	9 44	7 23·2	8 13	20 25·0
	8 5·8	9 44	6 57·2	8 13	° ′ ″
31 0	8 19·3	9 46	7 5·7	8 11	277 8 48

Focal point 21·60. Axis following up to 45*b* inclusive, then preceding.

1889, JULY 10.

Victoria and D. M. — 5°·5099. (x) (50)

Sidereal Time.	Microscope I. Circle.	Microscope I. Index.	Microscope II. Circle.	Microscope II. Index.	Mean of Times and Circle Readings.
h m s	′ ″	′ ″	′ ″	′ ″	
17 29 42	8 13·3	9 24	6 54·2	8 24	h m s
35 44	6 49·8	9 24	5 31·7	8 19	17 38 21·3
41 32	0 20·3	9 28	9 0·2	8 16	° ′ ″
46 27	0 6·3	9 26	8 46·2	8 17	43 44 20

Victoria and D. M. — 5°·5099. (x) (51)

Sidereal Time.	Microscope I. Circle.	Microscope I. Index.	Microscope II. Circle.	Microscope II. Index.	Mean of Times and Circle Readings.
h m s	′ ″	′ ″	′ ″	′ ″	
18 4 57	1 42·8	9 25	1 23·2	8 18	h m s
15 2	3 6·3	9 30	2 48·2	8 16	18 17 24·8
22 41	0 55·8	9 30	0 31·2	8 17	° ′ ″
26 59	2 29·8	9 28	2 4·2	8 15	222 15 30

Standard Stars. (52*a*)

18 45·3	8 1·8	9 34	7 16·2	8 14	h m
	7 50·8	9 30	7 9·2	8 16	18 50·8
	9 47·8	9 34	9 3·7	8 14	° ′ ″
56·3	0 9·8	9 36	9 33·2	8 16	277 9 41

Standard Stars. (52*b*)

19 5·3	0 14·3	9 32	8 46·2	8 8	h m
	0 14·3	9 30	8 38·2	8 12	19 11·8
	9 39·8	9 34	8 5·2	8 10	° ′ ″
18·3	9 21·8	9 33	7 42·2	8 6	97 10 15

Focal point 21·60. Axis following.

1889, JULY 31.

Victoria and D. M. — 4°·4861. (m) (62)

Sidereal Time.	Microscope I. Circle.	Microscope I. Index.	Microscope II. Circle.	Microscope II. Index.	Mean of Times and Circle Readings.
h m s	′ ″	′ ″	′ ″	′ ″	
19 16 40	1 5·3	9 39	9 20·7	8 14	h m s
22 20	9 5·3	9 2	7 49·7	8 8	19 24 28·8
27 15	5 54·3	9 46	4 5·7	8 13	° ′ ″
31 40	7 16·8	9 44	5 24·2	8 7	14 23 38

Victoria and D.M. — 4°·4861. (m) (63)

Sidereal Time.	Microscope I. Circle.	Microscope I. Index.	Microscope II. Circle.	Microscope II. Index.	Mean of Times and Circle Readings.
h m s	′ ″	′ ″	′ ″	′ ″	
19 39 54	9 2·3	9 42	8 1·2	8 2	h m s
44 3	2 53·8	9 42	1 54·2	8 7	19 46 24·3
49 1	3 19·8	9 40	2 18·2	8 4	° ′ ″
52 39	6 59·3	9 45	5 57·2	8 6	193 41 9

Digitized by Google

Sidereal Time.	Microscope I. Circle.	Microscope I. Index.	Microscope II. Circle.	Microscope II. Index.	Mean of Times and Circle Readings.
1889, JULY 31—*continued*.					
Standard Stars. (66*a*)					
h m	′ ″	′ ″	′ ″	′ ″	
20 49·2	0 54·3	9 47	8 48·2	7 57	h m
	1 10·8	9 51	9 4·2	8 2	20 55·2
	0 14·3	9 50	8 8·2	7 56	° ′ ″
21 1·2	0 48·8	9 50	8 35·7	8 1	97 10 49
Standard Stars. (66*b*)					
h m	′ ″	′ ″	′ ″	′ ″	
21 6·2	8 42·8	9 54	7 21·7	8 1	h m
	9 13·8	9 56	7 44·7	8 4	21 11·2
	2 3·8	9 58	0 37·2	7 57	° ′ ″
16·2	2 6·8	9 57	0 36·2	7 57	277 10 49
Standard Stars. (68*a*)					
22 12·2	9 36·8	9 47	9 8·2	8 24	h m
	9 58·8	9 37	9 28·2	8 35	22 18·2
	9 9·8	9 36	8 31·7	8 25	° ′ ″
24·2	9 47·3	9 34	9 12·2	8 27	277 10 18
Standard Stars. (68*b*)					
22 30·2	8 19·3	9 37	6 56·2	8 26	h m
	8 48·8	9 36	7 29·7	8 36	22 39·2
	2 14·8	9 34	1 0·7	8 40	° ′ ″
48·2	2 34·3	9 37	1 15·2	8 24	97 10 45
Victoria and D. M. — 4°·4861. (m) (70)					
23 22 27	7 43·8	9 29	6 29·7	8 35	h m s
missing	1 37·3	9 28	1 14·2	8 36	23 34 19·5
missing	1 12·8	9 32	0 5·2	8 35	° ′ ″
46 12	6 11·3	9 33	5 7·7	8 36	5 27 19

I. and S. 2. Focal point 21·60. Axis following till 66*b* inclusive, then preceding.
$23^h\ 50^m$. Stars too low: bright twilight.
$23^h\ 22^m$. The wires for the declination circle used by mistake: only noticed at 3rd pointing. Also owing to the observer being greatly tired the time for the 2nd bisection was forgotten. Observation rejected.

Sidereal Time.	Microscope I. Circle.	Microscope I. Index.	Microscope II. Circle.	Microscope II. Index.	Mean of Times and Circle Readings.
1889, AUGUST 5.					
Victoria and D. M. — 4°·4843. (g) (76)					
h m s	′ ″	′ ″	′ ″	′ ″	
19 8 37	2 33·8	9 38	1 15·2	8 6	h m s
13 59	3 55·8	9 46	2 47·7	8 13	19 16 8·0
18 43	1 3·8	9 46	9 48·2	8 14	° ′ ″
23 13	8 30·8	9 40	7 15·2	8 4	145 56 57
Victoria and D. M. — 4°·4843. (g) (77)					
h m s	′ ″	′ ″	′ ″	′ ″	
19 33 39	3 43·8	9 44	2 13·7	8 8	h m s
38 0	3 41·8	9 44	2 19·2	8 4	19 40 1·3
42 32	7 33·8	9 49	6 8·2	8 5	° ′ ″
45 54	1 41·8	9 50	0 10·2	8 6	326 39 29
Standard Stars. (80*a*)					
20 35 0	0 51·8	9 46	8 51·2	7 57	h m
	1 32·3	9 48	9 18·2	7 59	20 40·5
	0 8·8	9 50	8 0·2	7 57	° ′ ″
46 0	0 19·8	9 46	8 8·2	7 58	97 10 46
Standard Stars. (80*b*)					
20 54 0	9 0·8	0 0	7 33·2	7 34	h m
	8 57·3	9 58	6 42·7	7 50	21 1·0
	1 57·8	9 54	0 32·2	7 57	° ′ ″
8 0	2 2·8	9 45	0 35·2	7 56	277 10 40

I. and S. 2–3. Focal point 21·60. Axis following.
The want of transparency of the air continually increasing.

Digitized by Google

1889, AUGUST 8.

Victoria and D. M. — 5°·5006. (f) (83)

Sidereal Time.	Microscope I. Circle.	Microscope I. Index.	Microscope II. Circle.	Microscope II. Index.	Mean of Times and Circle Readings.
h m s	′ ″	″	′ ″	′ ″	
21 34 1	0 59·8	9 38	9 47·2	7 55	h m s
38 47	1 40·8	9 44	0 20·2	7 54	21 40 51·3
43 40	1 28·8	9 41	0 13·2	7 53	° ′ ″
46 57	2 28·8	9 46	1 19·2	8 0	281 19 43

Victoria and D. M. — 5°·5006. (f) (84)

Sidereal Time.	Microscope I. Circle.	Microscope I. Index.	Microscope II. Circle.	Microscope II. Index.	Mean of Times and Circle Readings.
h m s	′ ″	′ ″	′ ″	′ ″	
21 59 47	3 29·8	9 35	1 46·7	8 12	h m s
22 4 13	5 47·8	9 35	4 4·2	8 12	22 6 43·3
8 26	2 15 3	9 36	0 37·2	8 14	° ′ ″
14 27	9 30·3	9 34	8 8·2	7 54	101 43 5

Standard Stars. (86*b*)

23 0·2	2 45·3	9 36	1 17·7	8 14	h m
	3 0·8	9 28	1 34·2	8 15	23 7·2
	9 40·8	9 30	8 32·7	8 14	° ′ ″
14·2	9 38·8	9 20	8 16·7	8 22	97 11 43

I. and S. 2. Focal point 21·60. Axis preceding.
Stars low at last and diffused.

1889, AUGUST 10.

Victoria and D. M. — 5°·5006. (f) Screen I. (87)

h m s	′ ″	′ ″	′ ″	′ ″	
18 20 55	5 49·8	9 30	4 1·2	8 11	h m s
26 58	6 15·8	9 35	4 32·2	8 9	18 29 25·5
32 16	7 5·8	9 34	5 17·2	8 12	° ′ ″
37 33	2 16·8	9 30	0 35·2	8 12	69 55 37

Victoria and D.M. — 5°·4992. (e) (88)

h m s	′ ″	′ ″	′ ″	′ ″	
18 52 42	7 28·8	9 35	5 33·7	8 11	h m s
56 6	7 43·8	9 37	5 52·2	8 13	18 58 49·0
19 1 25	1 39·8	9 30	9 44·2	8 12	° ′ ″
5 3	2 23·8	9 36	0 26·7	8 8	45 4 58

Victoria and D. M. — 5°·4992. (e) (89)

19 14 48	5 3·8	9 36	4 17·2	8 8	h m s
19 33	1 25·8	9 44	0 38·2	8 6	19 22 30·8
25 22	3 7·8	9 42	2 11·2	8 4	° ′ ″
30 20	3 50·3	9 41	1 55·7	8 7	224 59 2

Victoria and D.M. — 5°·5006. (f) Screen I. (90)

19 48 22	6 24·8	9 44	5 16·2	8 2	h m s
52 40	1 24·3	9 46	0 16·2	8 7	19 57 0·3
20 0 52	8 36·3	9 46	7 21·2	7 59	° ′ ″
6 7	6 33·8	9 40	5 19·2	8 4	249 46 14

Focal point 21·60. Axis following.
19h 9m. Observing very troublesome on account of moon and vapour. Clouds keep getting thicker and the last distance was measured without the prism.

1889, AUGUST 16.

Victoria and D. M. — 5°·4992 (e) (94)

h m s	′ ″	′ ″	′ ″	′ ″	
18 36 1	0 32·5	9 43	9 43·6	8 7	h m s
40 51	1 26·5	9 43	0 36·6	8 2	18 42 5·5
44 4	6 39·5	9 38	5 46·6	8 3	° ′ ″
47 26	4 31·5	9 43	3 40·1	8 6	243 18 57

Victoria and D. M. — 5°·4992. (e) (95)

h m s	′ ″	′ ″	′ ″	′ ″	
18 51 33	0 40·5	9 44	8 45·1	8 4	h m s
54 20	3 57·5	9 42	2 2·1	8 4	18 56 33·5
58 40	5 11·5	9 46	3 7·6	8 2	° ′ ″
19 1 41	7 7·5	9 46	5 8·1	8 3	63 9 19

Digitized by Google

Sidereal Time.	Microscope I. Circle.	Microscope I. Index.	Microscope II. Circle.	Microscope II. Index.	Mean of Times and Circle Readings.	Sidereal Time.	Microscope I. Circle.	Microscope I. Index.	Microscope II. Circle.	Microscope II. Index.	Mean of Times and Circle Readings.
					1889, AUGUST 16—*continued.*						
	Standard Stars.				(96*a*)		Standard Stars.				(96*b*)
h m	′ ″	′ ″	′ ″	′ ″	h m	h m	′ ″	′ ″	′ ″	′	h m
19 19·2	9 23·5	9 44	7 20·1	8 0	19 24·7	19 35·2	9 49·5	9 48	8 54·1	8 3	19 42·2
	9 52·5	9 46	8 1·6	7 59	° ′ ″		9 56·5	9 47	8 51·1	8 3	° ′ ″
	0 36·0	9 46	8 42·1	8 4	97 10 12		8 42·0	9 45	7 27·1	7 55	277 9 51
30·2	0 27·5	9 43	8 37·1	8 4		49·2	8 51·5	9 53	7 39·1	7 56	

I. and S. 2. Focal point 21·60. Axis following.
Some water has dropped from the imperfectly opened shutter on to the telescope and penetrated between the lenses.

1889, AUGUST 22.

	Victoria and D. M. — 5°·4989. (d)				(112)
h m s	′ ″	′ ″	′ ″	′ ″	h m s
22 6 4	3 51·0	9 35	2 37·6	8 24	22 15 56·0
9 50	8 43·5	9 32	7 27·6	8 25	° ′ ″
19 14	0 56·5	9 33	9 50·1	8 25	111 24 29
28 36	2 49·0	9 28	1 36·1	8 27	

I. and S. 3. Focal point 21·60. Axis preceding.
Continual interruption from cloud.

1889, AUGUST 25.

	Victoria and D. M. — 5°·4989. (d)				(114)
h m s	′ ″	′ ″	′ ″	′ ″	h m s
21 17 51	2 53·5	9 43	1 58·1	8 14	21 31 12·5
22 57	9 31·5	9 44	8 31·6	8 20	° ′ ″
39 59	9 3·5	9 42	8 22·1	8 17	208 16 3
44 3	0 39·0	9 44	9 49·6	8 18	

	Victoria and D. M. — 5°·4989. (d)				(115)
h m s	′ ″	′ ″	′ ″	′	h m s
21 49 50	8 27·5	9 41	6 41·1	8 22	21 56 22·0
53 50	1 46·5	9 38	0 5·1	8 18	° ′ ″
58 59	8 40·5	9 39	6 56·1	8 17	27 51 26
22 2 49	6 21·5	9 36	4 40·1	8 20	

I. and S. 3. Focal point 21·60. Axis preceding.
Continually interrupted by cloud. Very misty.

Digitized by Google

OBSERVATIONS OF BAROMETER AND THERMOMETER, GÖTTINGEN.

Date, 1889.	Sidereal time.	Barometer reduced to 0°.	Thermometers.			
			O.	o.	XI.	VIII.
	h m	m	°	°	°	°
June 11	14 45	744·4	...	...	...	+15·6
	14 48	...	+20·2	+19·9	+19·5	...
	16 6	...	+18·2	+18·5	+17·6	+15·5
	16 36	...	+17·6	+18·1	+17·1	...
	16 44	744·8	...	...	...	...
	17 30	744·9	...	...	...	+13·8
	17 36	...	+16·5	+17·1	+17·2	...
	19 35	...	+15·4	+16·5	+15·5	...
	19 45	744·7	...	...	...	+12·4
June 18	15 15	749·5	...	...	...	+15·5
	15 20	...	+19·6	+18·9	+18·2	...
	16 30	...	+17·4	+18·1	+16·4	...
	17 10	749·6	...	...	...	+13·0
	18 50	...	...	+16·1	+14·3	...
	20 10	...	+13·4	+14·3	+13·4	...
	20 20	749·3	...	...	...	+10·5
June 20	16 10	746·2	...	...	...	+14·8
	16 17	...	+18·6	+18·4	+17·9	...
	17 25	...	...	...	...	+13·2
	17 48	...	...	...	+16·5	...
	19 7	...	...	+16·5	+15·3	...
	19 46	...	+14·5	+15·7	+14·8	...
	20 0	746·7	...	...	...	+11·3
June 21	15 55	747·1	...	...	...	+16·2
	15 59	...	+21·0	+19·5	+19·1	...
	17 50	...	...	...	...	+14·0
	18 20	...	+17·2	+17·7	+16·2	...
	19 5	...	...	...	...	+12·9
	20 0	...	+15·5	+16·9	+15·4	...
	20 17	746·8	...	...	...	+12·2
June 22	17 48	745·7	...	...	...	+14·2
	17 53	...	+18·2	+17·9	+17·2	...
	20 10	...	...	+15·9	+13·9	...
	20 30	...	+14·5	+15·7	+13·9	...
	20 40	745·6	...	...	...	+12·0
June 24	15 57	748·5	...	...	...	+15·0
	15 40	...	+18·9	+18·9	+18·1	...
	17 32	...	+16·5	+17·3	+16·1	+11·6
	18 23	...	+15·4	+16·3	+14·9	...
	19 40	...	...	...	...	+ 9·4
	20 2	...	+12·8	+14·0	+12·9	...
	20 30	749·1	...	...	...	+ 8·9
June 25	16 5	749·3	...	...	...	+15·4
	16 9	...	+21·4	+20·8	+20·2	...
	16 51	...	+20·2	+20·1	+19·3	...
	17 50	...	...	...	...	+13·2
	18 26	...	+17·4	+17·9	+16·4	...
	19 47	...	+15·4	+16·3	+14·5	...
	19 58	749·9	...	...	...	+11·4
June 26	16 15	748·7	...	...	...	+19·3
	16 29	...	+22·4	+22·2	+21·4	...
	18 5	...	...	...	...	+15·7
	19 48	...	+18·2	+18·2	+17·9	...
	20 37	748·1	...	...	...	...
July 4	16 30	748·6	...	...	...	+13·7
	16 35	...	+18·8	+19·1	+18·7	...
	17 0	...	...	...	...	+12·6
	17 56	...	+16·8	+17·5	+16·1	...
	19 10	749·3	...	...	...	+10·6
July 9	16 30	745·5	...	...	...	+18·4
	16 38	...	+22·2	+21·2	+20·6	...
	17 58	...	...	...	+20·0	...
	18 49	...	+19·2	+20·0	+17·9	...
	19 8	...	...	...	+18·2	...
	19 49	...	...	...	+17·5	...
	19 57	...	...	...	...	+15·2
	20 34	...	...	...	+17·3	...
	20 40	744·9	...	..	...	...
	21 3	...	+16·9	+17·6	+17·1	...
	22 5	...	+16·4	+17·5	+16·3	...
	22 10	744·6	...	...	...	+13·8

O. is the thermometer at the object-glass.
XI. „ „ „ pillar.
o. is the thermometer at the eye-end.
VIII. „ „ outside in the open air.

Digitized by Google

Date, 1889.	Sidereal time.	Barometer reduced to 0°.	Thermometers.			
			O.	o.	XI.	VIII.
	h m	m	°	°	°	°
July 10	17 7	743·3	...	...	...	+21·3
	17 14	...	+23·2	+23·2	+22·7	...
	17 40	...	...	...	...	+20·4
	18 30	...	+23·2	+23·6	+23·5	...
	19 21	...	+23·0	+23·4	+23·1	...
	19 26	743·7	...	...	...	+21·2
	20 2	...	...	...	...	+21·8
	20 30	...	+22·8	+23·0	+22·7	...
	21 12	...	...	...	...	+20·5
	21 55	...	+21·8	+22·4	+21·9	...
	22 13	744·5	...	...	...	+19·1
July 11	17 22	748·7	...	...	...	+18·0
	17 30	...	+22·3	+21·8	+21·0	...
	19 10	...	...	...	+18·9	...
	20 19	...	+19·2	+19·4	+18·5	...
	20 25	748·7	...	...	...	+14·6
July 16	17 57	744·6	...	...	...	+12·2
	18 2	...	+15·8	+16·9	+15·9	...
	19 40	...	+13·9	+14·3	+13·5	...
	19 52	744·6	...	...	...	+11·3
July 31	17 44	751·6	...	...	...	+13·6
	18 7	...	+17·3	+17·2	+15·0	...
	18 23	...	...	...	...	+12·7
—	20 11	...	+13·9	+14·9	+13·2	...
	21 34	...	+12·6	+13·7	+12·1	...
	22 11	...	...	...	...	+10·2
	23 51	...	+11·3	+12·2	+11·3	...
	23 59	751·8	...	...	...	+ 8·6
August 1	17 37	748·0	...	...	...	+16·4
	17 42	...	+21·4	+20·9	+19·9	...
	18 54	...	+19·0	+19·5	+18·0	...
	19 5	747·7	...	...	...	+14·4
	20 7	...	...	...	...	+13·7
	21 15	...	+16·0	+16·2	+15·9	...
	21 52	...	...	...	...	+12·5
August 5	18 3	741·8	...	...	...	+17·6
	18 14	...	+21·2	+20·8	+20·3	...
	18 50	...	...	...	...	+17·2
	19 26	..	+19·0	+19·5	+18·6	...
	20 7	...	+18·5	+19·2	+18·6	...
	20 50	...	...	+18·6	+17·9	...
	21 12	...	...	...	...	+15·5

Date, 1889.	Sidereal time.	Barometer reduced to 0°.	Thermometers.			
			O.	o.	XI.	VIII.
	h m	m	°	°	°	°
August 5	21 22	...	+17·5	+18·5	+17·2	...
	22 16	...	...	...	...	+14·5
	23 10	...	+16·4	+17·1	+16·5	...
	0 36	...	+15·7	+16·7	+15·8	...
	0 41	743·4	...	...	...	+13·5
August 6	21 10	744·4	...	...	...	+14·2
	21 18	...	+15·9	+16·3	+16·1	...
	22 13	...	+15·6	+16·4	+15·7	...
	22 21	744·7	...	...	...	+13·5
August 8	21 0	748·9	...	...	...	+10·2
	21 5	...	+14·3	+13·9	+13·2	...
	21 51	...	+13·1	+14·1	+12·3	...
	22 32	...	+12·3	+13·2	+12·0	...
	23 29	...	+11·7	+12·6	+11·6	...
	23 35	748·6	...	...	...	+ 8·6
August 10	17 50	743·2	...	...	...	+13·9
	17 57	...	+17·7	+17·7	+17·1	...
	19 4	...	...	...	+15·0	+12·5
	20 10	...	+14·9	+15·7	+14·1	...
	21 11	742·6	...	...	...	+10·8
	21 20	...	+13·6	+14·3	+12·6	...
	22 43	...	+12·6	+13·4	+12·5	...
	23 0	741·5	...	...	...	+10·3
August 11	20 5	736·6	...	...	...	+12·3
	20 11	...	+15·3	+15·1	+14·3	...
	21 13	...	+14·2	+14·3	+14·0	...
	21 19	736·8	...	...	...	+12·6
August 16	18 4	747·7	...	...	...	+14·0
	18 18	...	+16·5	+16·5	+15·5	...
	18 55	...	...	...	...	+13·2
	19 8	...	...	...	+15·1	...
	19 52	...	+14·9	+15·9	+14·9	...
	20 55	...	...	...	+14·2	...
	21 37	...	+13·9	+14·8	+13·6	...
	22 25	...	+13·3	+14·4	+13·3	...
	22 46	...	...	...	...	+10·7
	22 57	...	+13·1	+14·2	+13·1	...
	23 58	...	+12·6	+13·7	+12·6	...
	0 13	747·7	...	...	...	+10·4

O. is the thermometer at the object-glass.
XI. „ „ „ pillar.
o. is the thermometer at the eye-end.
VIII. „ „ outside in the open air.

Digitized by Google

Date 1889.	Sidereal time.	Barometer reduced to 0°.	Thermometers.			
			O.	o.	XI.	VIII.
	h m	m	°	°	°	°
August 17	17 55	744·6	...	...	...	+19·0
	18 5	...	+20·8	+20·9	...	...
	19 53	...	+19·5	+20·0	+19·4	...
	20 38	744·7	...	...	...	+18·0
August 20	18 0	738·3	...	...	...	+15·7
	18 10	...	+18·5	+17·7	+17·5	...
	18 50	...	+17·0	+16·2	+16·7	+15·3
	19 38	...	+16·0	+16·5	+16·1	...
	20 32	...	+15·5	+15·9	+15·6	...
	21 7	...	+15·3	+15·5	+15·3	...
	21 25	...	...	...	...	+14·7
	22 47	...	+14·5	+15·2	...	...
	23 17	...	+15·8	+15·2	+15·1	...
	23 25	740·1	...	...	...	+13·6
August 22	21 0	741·4	...	...	...	+12·8
	21 4	...	+15·8	+15·9	+15·2	...
	22 32	...	+13·9	+14·4	+13·5	...
	23 3	741·5	...	...	...	+12·3
August 25	20 10	...	...	...	...	+10·0
	20 16	745·4	+13·7	+13·9	+12·5	...
	22 10	...	+11·7	+12·9	+11·7	...
	22 36	...	...	...	...	+ 8·9
	22 52	...	+11·5	+12·4	+11·3	...
	0 27	...	...	...	+11·1	...
	0 35	745·5	...	...	...	+ 9·0

O. is the thermometer at the object-glass.
XI. „ „ „ pillar.
o. is the thermometer at the eye-end.
VIII. „ „ outside in the open air.

Digitized by Google

Digitized by Google

BAMBERG

OBSERVATIONS OF VICTORIA

IN

1889.

Digitized by Google

BAMBERG HELIOMETER OBSERVATIONS OF VICTORIA.—DISTANCES.

Observer—DR. HARTWIG.

1889, JUNE 26.

Time by Chronometer.	Scale A.	Microscope.	Scale B.	Sidereal Time and Distance.
	Victoria and D. M. — 7°·5183. (λ)			(1)
h m s				
12 48 1	45·3	1·263	362	
		1·772		
13 11 23	44·9	4·126	362	
		4·624		h m s
				19 29 39
19 32	162·3	1·232	245	4679″·152
		1·750		
27 30		1·719		
		2·223		
	Victoria and D. M. — 5°·5138. (ε)			(3)
14 9 22	165·7	2·792	243	
		3·293		
16 38		2·529		
		3·038		h m s
				20 38 43·5
24 48	42·6	2·732	365	4893″·324
		3·248		
31 13		3·257		
		3·761		

Time by Chronometer.	Scale A.	Microscope.	Scale B.	Sidereal Time and Distance.
	Victoria and D. M. — 5°·5138. (ε)			(2)
h m s				
13 49 6	42·3	1·328	365	
		1·844		
53 33		1·462		
		1·972		h m s
				20 14 58·5
59 35	164·7	3·252	242	4903″·546
		3·770		
14 4 44		2·958		
		3·462		

I. 3 ; S. 2. Focal point 29·0.
Much cirrus cloud noted, especially near the place of observation at the end.

Temperature of tube at h m 14 45 = 17°·85 Réaum.

h m s
11 28 52 chronometer = h m s 17 46 37·9 Sidereal time.
14 58 10 ,, = 21 16 30·3 ,,

1889, JULY 18.

Time by Chronometer.	Scale A.	Microscope.	Scale B.	Sidereal Time and Distance.
	Victoria and D. M. — 4°·4926 (t)			(7)
h m				
12 58 23	93·9	4·311	314	
		4·768		
13 4 15		4·008		
		3·501		h m s
				20 51 3·5
8 10	114·	2·122	294	810″·006
		1·614		
14 50	114·4	2·511	294	
		2·005		

Time by Chronometer.	Scale A.	Microscope.	Scale B.	Sidereal Time and Distance.
	Standard Stars.			(8)
h				
13 29 25	184·6	3·184	223	
		2·672		
33 20		3·230		
		2·721		m
				21 20 16
38 0	23·5	2·718	385	6455″·680
		2·215		
41 22		2·777		
		2·280		

Digitized by Google

Time by Chronometer.	Scale A.	Microscope.	Scale B.	Sidereal Time and Distance.	Time by Chronometer.	Scale A.	Microscope.	Scale B.	Sidereal Time and Distance.
				1889, JULY 18—*continued.*					
		Victoria and D. M. — 4°·4926. (t)		(10)					
h m s									
14 14 42	114·3	1·877	293						
		1·366							
17 17		2·054							
		1·537		h m s					
24 0	92·7	3·574	314	22 5 45·5					
		3·060		851″·354					
27 36		3·460							
		2·964							

Focal point 29·0.
Temperature of tube at 12 h 25 m = 14°·6 Réaum.
" " 15 20 = 11·5 "

11 h 46 m 21·5 s by chronometer = 19 h 30 m 46·8 s Sidereal time.
15 29 50 " = 23 14 52·2 "

1889, JULY 20.

		Victoria and D. M. — 4°·4903. (q)		(13)			Standard Stars.		(14)
h m s					h m s				
13 27 48	90·7	3·779	316		13 57 36	184·6	3·129	223	
		3·274					2·619		
35 0		4·091			14 2 52		3·129		
		3·582		h m s			2·626		h m s
38 28	116·3	1·737	291	21 28 58·5	7 26	23·6	2·953	385	21 57 23·5
		1·226		1007″·127			2·444		6454″·317
44 10		1·393			11 11		2·950		
		0·892					2·439		
		Victoria and D. M. — 4°·4903. (q)		(16)					
14 40 25	116·4	2·557	292						
		2·051							
43 15		2·376							
		1·866		h m s					
46 0	91·7	3·764	316	22 37 42·5					
		3·259		972″·155					
49 55		3·910							
		3·400							

Focal point 29·0. I. 3; S. 2–3.
Temperature of tube at 12 h 50 m = 16°·45 Réaum.
" " 15 15 = 14·45 "

13h 38m, eye-piece screwed out a little.
12 h 15 m 55·5 s by chronometer = 20 h 8 m 17·7 s Sidereal time.
15 45 15·5 " = 23 38 12·1 "

Digitized by Google

Time by Chronometer.	Scale A.	Microscope.	Scale B.	Sidereal Time and Distance.	Time by Chronometer.	Scale A.	Microscope.	Scale B.	Sidereal Time and Distance.
				1889, JULY 22.					
		Victoria and D. M. — 4°·4903. (q)		(18)					
h m s									
12 49 30	111·4	2·623	295						
		2·120							
54 11		2·837		h m s					
		2·324		20 56 44					
58 45	95·5	2·960	312	658″·758					
		2·456							
13 2 58		2·722							
		2·223							

Focal point 29·0.
Temperature of tube at h m 12 30 = 13°·95 Réaum.
" " 15 30 = 12·35 "

h m s 9 41 35 by chronometer = h m s 17 41 24·3 Sidereal time.
15 42 10·5 " = 23 42 58·7 "

				1889, JULY 31.					
		Victoria and D. M.— 4°·4861 (m)		(24)		Standard Stars.			(25)
h m s					h m s				
12 49 52	112·3	1·767	295		13 18 54	23·6	2·990	385	
		1·260					2·480		
54 31		1·712			22 55		2·908		
(Prism rotated)		1·205		h m s 21 32 26	(Prism rotated)		2·399		h m s
59 18	94·9	4·366	312	685″·967	28 37	184·6	3·161	223	22 1 28
		3·876					2·661		6454″·451
13 3 0		4·445			32 3		3·144		
		3·925					2·637		
		Victoria and D. M. — 4°·4861 (m)		(27)					
14 10 50	95·2	1·247	312						
		0·747							
17 25		1·324							
(Prism rotated)		0·801		h m s 22 55 37					
23 5	111·9	4·617	295	675″·945					
		4·115							
27 10		4·601							
		4·092							

Focal point 29·0. I. 2 ; S. 3–4.
Temperature of tube at h m 12 10 = 15°·1 Réaum.
" " 14 54 = 12·1 "
14h. eye-piece again screwed out while turning prism.

h m 10 53 30·5 by chronometer = h m s 19 28 55·8 Sidereal time.
15 21 27 " = 23 57 36·3 "

Digitized by Google

BAMBERG HELIOMETER OBSERVATIONS OF VICTORIA—POSITION ANGLES.

Observer—DR. HARTWIG.

1889, JULY 11.

Time by Chronometer.	Circle I.	Micr. I.	Index.	Circle II.	Micr. II.	Index.	Sidereal Time and Circle Readings.
		Victoria and D. M. — 4°·4960. (w)					(4)
h m s	° ′	′ ″	′ ″	° ′	′ ″	′ ″	
12 44 42	237 57	6 47	0 41	58 1	6 25	5 35	
		6 47			6 24		h m s
54 2	238 7	7 44	0 43	58 11	7 15	5 33	20 15 30·5
		7 43			7 11		° ′ ″
13 3 10	238 7	6 30	0 51	58 10	5 58	5 31	58 9 23·5
		6 28			5 53		
12 1	238 19	0 7	0 42	58 23	9 33	5 32	
		0 10			9 36		
		Victoria and D. M. — 5°·5099. (x)					(5)
h m s	° ′	′ ″	′ ″	′	′ ″	′	
13 33 51	250 52	2 47	0 48	70 57	2 10	5 35	
		2 47			2 11		h m s
41 19	250 42	3 2	0 42	70 47	2 24	5 26	21 3 48·0
		3 2			2 20		° ′ ″
52 4	250 8	8 33	0 56	70 12	readings inferred.		70 27 14·0
		8 39					
59 19	249 58	8 30	0 58	70 2	7 51	5 27	
		8 32			7 50		

h m s
11 35 20 by chronometer = 18 52 8·3 Sidereal time.
14 23 45·5 „ = 21 41 1·6 „

h m
13 15 Illumination almost failed.
13 52 Long pauses to let electric current recover itself.
14 0 Cirrus cloud: illumination almost completely gone.

1889, JULY 18.

Time by Chronometer.	Circle I.	Micr. I.	Index.	Circle II.	Micr. II.	Index.	Sidereal Time and Circle Readings.
		Victoria and D. M. — 4°·4926. (t)					(6)
h m s	° ′	′ ″	′ ″	° ′	′ ″	′ ″	
12 36 16	181 39	0 0	0 53	1 43	9 37	5 29	
		0 6			9 37		h m s
44 6	181 42	2 59	1 0	1 47	2 30	5 27	20 30 13·5
		3 0			2 29		° ′ ″
49 2	181 53	3 53	0 55	1 58	3 20	5 25	1 49 15·0
		3 52			3 21		
53 5	181 53	3 50	0 55	1 58	3 21	5 27	
		3 50			3 19		
		Standard Stars					(9)
h m s	° ′	′	′ ″	° ′	′	′ ″	
13 45 31	187 22	2 42	1 0	7 27	2 3	5 27	
		2 44			1 59		h m s
50 32	187 22	2 37	1 0	7 27	1 52	5 29	21 39 43·0
		2 32			1 47		° ′ ″
59 8	187 20	0 38	0 57	7 24	0 1	5 26	7 23 5·0
		0 38			0 0		
14 4 33	187 20	0 40	0 56	7 24	9 56	5 27	
		0 40			9 50		
		Victoria and D. M. — 4°·4926. (t)					(11)
14 31 52	182 19	9 45	0 55	2 24	9 0	5 24	
		9 48			8 56		h m s
40 0	182 17	7 41	0 57	2 22	7 3	5 25	22 28 16·0
		7 42			7 0		° ′ ″
44 50	182 11	2 11	1 0	2 16	1 30	5 24	2 18 55·5
		2 10			1 22		
14 51 2	182 17	8 0	1 0	2 21	7 4	5 22	
		7 59			7 1		
56 30	182 16	7 3	1 2	2 20	6 10	5 27	
		7 1			6 1		

Focal point 29·0. Axis preceding.

Temperature of tube at h m 12 25 = 14°·6 Réaum.
„ „ 15 20 = 11°·5 „

h m s
11 46 21·5 by chronometer = 19 30 46·8 Sidereal time.
15 29 50 „ = 23 14 52·2 „
$14^h\,44^m$. Not satisfied with measure: bad light: measure repeated at $14^h\,56^m$.

Digitized by Google

Time by Chronometer.	Circle I.	Micr. I.	Index.	Circle II.	Micr. II.	Index.	Sidereal Time and Circle Readings.
1889, July 20.							
Victoria and D. M. — 4°·4903. (q) (12)							
h m s	° ′	′ ″	′ ″	° ′	′ ″	′ ″	
13 4 50	163 41	1 20	0 59	343 45	0 50	5 23	
		1 23	1 0		0 45	5 21	
11 20	163 34	5 1	0 57	343 38	4 25	5 21	h m s
		5 0	0 57		4 22	5 19	21 6 30·5
17 29	163 38	8 57	0 57	343 43	8 21	5 18	° ′ ″
		8 56	0 57		8 20	5 17	163 39 12·5
22 8	163 34	5 20	1 0	343 39	4 45	5 19	
		5 20	1 0		4 43	5 20	
Victoria and D. M. — 4°·4903. (q) (17)							
14 53 25	162 24	4 51	1 4	342 28	4 11	5 26	
		4 51	1 6		4 11	5 27	
58 18	162 16	6 32	1 4	342 20	5 46	5 21	h m
		6 31	1 4		5 42	5 23	22 53 47
15 3 30	162 11	2 14	1 1	342 16	1 27	5 21	° ′ ″
		2 10	1 4		1 24	5 21	162 16 40·0
8 30	162 7	7 31	1 4	342 11	6 40	5 21	
		7 31	1 3		6 39	5 20	

Standard Stars. (15)

Time by Chronometer.	Circle I.	Micr. I.	Index.	Circle II.	Micr. II.	Index.	Sidereal Time and Circle Readings.
h m s	° ′	′ ″	′ ″	° ′	′ ″	′ ″	
14 14 20	187 21	1 23	1 3	7 25	0 29	5 18	
		1 24	1 2		0 28	5 17	
20 15	187 21	1 41	1 2	7 25	0 47	5 18	h m s
		1 42	1 1		0 44	5 15	22 15 54·5
26 13	187 20	0 54	1 3	7 24	0 5	5 21	° ′ ″
		0 57	1 2		0 3	5 21	187 22 36·5
31 48	187 20	0 56	1 3	7 24	0 7	5 24	
		0 55	1 3		0 4	5 23	

Focal point 29·0. Axis preceding. I. 3; S. 2–3.

Temperature of tube at h m 12 50 = 16°·45 Réaum.
" " 15 15 = 14·45 "
Scarcely recognisable at last on account of dawn.

h m s
12 15 55·5 by chronometer = 20 8 17·7 Sidereal time.
15 45 15·5 " = 23 38 12·1 "

1889, July 22.

Victoria and D. M. — 4°·4903. (q) (19)

h m s	° ′	′ ″	′ ″	° ′	′ ″	′ ″	
13 8 48	220 17	7 13	0 54	40 21	6 22	5 22	
		7 8	0 53		6 20	5 21	
16 0	220 8	8 1	0 57	40 11	7 11	5 28	h m s
		8 0	0 58		7 12	5 27	21 19 31·5
22 36	219 47	7 46	0 58	39 51	7 3	5 30	° ′ ″
		7 49	0 59		7 3	5 28	39 59 53·5
29 2	219 40	0 55	1 3	39 44	0 6	5 21	
		0 55	1 3		0 8	5 20	

Standard Stars. (20)

13 53 18	187 21	1 36	0 59	7 26	0 54	5 22	
		1 35	0 58		0 53	5 24	
58 55		1 13	1 0		0 29	5 22	h m s
		1 13	1 1		0 26	5 22	22 4 22
14 9 21		1 30	1 2		0 47	5 28	° ′ ″
		1 32	1 1		0 45	5 28	7 22 54·0
13 38		1 35	1 0		0 52	5 25	
		1 34	1 1		0 50	5 24	

Standard Stars. (21)

14 20 50	7 21	2 6	1 2	187 26	1 32	5 23	
		2 2	1 2		1 28	5 21	
27 50		1 55	1 3		1 18	5 21	h m s
		1 54	1 2		1 17	5 20	22 32 7
36 5	7 19	0 3	1 3	187 24	9 22	5 22	° ′ ″
		0 3	1 1		9 23	5 21	7 22 30·5
41 11		0 7	1 3		9 20	5 23	
		0 7	1 2		9 18	5 22	

Digitized by Google

Time by Chrono-meter.	Circle I.	Micr. I.	Index.	Circle II.	Micr. II.	Index.	Sidereal Time and Circle Readings.	Time by Chrono-meter.	Circle I.	Micr. I.	Index.	Circle II.	Micr. II.	Index.	Sidereal Time and Circle Readings.
							1889, JULY 22—*continued.*								
				Victoria and D.M. — 4°·4903. (q)			(22)								
h m s	° ′	′ ″	′ ″	° ′	′ ″	′ ″									
14 57 59	37 16	6 54	1 3	217 21	6 4	5 22									
		6 52	1 2		6 0	5 21									
15 3 41	37 11	2 28	1 3	217 16	1 48	5 21									
		2 27	1 3		1 46	5 20	h m s								
10 0	37 16	7 37	1 0	217 21	6 52	5 22	23 9 24·5								
		7 37	1 3		6 48	5 22	° ′ ″								
16 13	37 6	6 48	1 0	217 11	5 58	5 22	37 12 26·5								
		6 47	1 2		5 59	5 22									
23 31	36 58	8 15	1 0	217 2	7 24	5 24									
		8 14	1 0		7 24	5 22									

Focal point 29·0. Axis preceding. I. 3; S. 3.

Temperature of tube at $12^h\ 30^m = 13°\cdot95$ Réaum.
" " $15\ 30 = 12\cdot35$ "
$15^h\ 10^m$ and $15^h\ 23^m$. The mean of these two to be taken.

h m s
9 41 35 by chronometer = 17 41 24·3 Sidereal time.
15 42 10·5 " = 23 42 58·7

1889, JULY 31.

Victoria and D.M. — 4°·4861. (m) (23)

h m s	° ′	′ ″	′ ″	° ′	′ ″	′ ″	
12 22 50	101 31	2 20	0 53	281 36	1 47	5 22	
		2 21	0 53		1 43	5 22	
29 1	101 17	7 19	0 55	281 21	6 45	5 21	h m s
(Prism rotated.)		7 18	0 56		6 43	5 22	21 9 10·5
37 28	100 52	2 35	0 57	280 57	1 52	5 21	° ′ ″
		2 34	0 56		1 52	5 20	101 5 25·0
44 31	100 32	3 18	0 57	280 37	2 34	5 22	
		3 13	0 55		2 37	5 21	

Standard Stars. (26)

h m s	° ′	′ ″	′ ″	° ′	′ ″	′ ″	
13 36 34	187 20	0 40	1 0	7 24	9 47	5 22	
		0 40	0 59		9 45	5 21	
43 30	187 19	0 24	0 59		9 28	5 19	h m s
		0 22	0 59		9 29	5 20	22 22 28·5
50 55	187 22	2 38	1 2	7 26	1 43	5 19	° ′ ″
		2 35	1 1		1 39	5 18	7 22 53·5
55 18		2 23	1 1		1 30	5 20	
		2 24	1 0		1 26	5 20	

Victoria and D.M. — 4°·4861. (m) (28)

14 31 48	96 41	1 58	1 3	276 46	1 0	5 15	
		1 57	1 4		1 1	5 17	
37 7	96 28	8 54	1 1	276 32	7 51	5 18	h m s
(Prism rotated.)		8 51	1 4		7 49	5 19	23 16 26
44 1	96 16	7 6	1 5	276 21	5 59	5 17	° ′ ″
		7 2	1 5		5 56	5 17	96 24 59·5
48 35	96 6	6 48	1 0	276 11	5 45	5 17	
		6 50	1 3		5 43	5 19	

Focal point 29·0. Axis preceding. Screen III. I. 2–3; S. 3–4.

Temperature of tube at $12^h\ 10^m = 15°\cdot1$ Réaum.
" " $14\ 54 = 12\cdot1$ "

h m s
10 53 30·5 by chronometer = 19 28 55·8 Sidereal time.
15 21 27 " = 23 57 36·3 "

Digitized by Google

1889, AUGUST 1.

Victoria and D. M. — 4°·4855. (k) (29)

Time by Chronometer.	Circle I.	Micr. I.	Index.	Circle II.	Micr. II.	Index.	Sidereal Time and Circle Readings.
h m s	° ′	′ ″	′ ″	° ′	′ ″	′ ″	
11 41 28	54 41	1 20	0 48	234 46	1 0	5 26	
		1 19	0 50		0 58	5 25	
46 10	54 47	7 26	0 47	234 52	7 2	5 22	h m s
(Prism rotated.)		7 24	0 48		7 1	5 23	20 29 15
53 5	55 9	0 2	0 52	235 14	9 37	5 23	° ′ ″
		0 1	0 52		9 35	5 20	55 1 23
58 4	55 19	9 55	0 50	235 24	9 31	5 18	
		9 56	0 50		9 30	5 18	

Victoria and D. M. — 4°·4861. (m) (30)

Time by Chronometer.	Circle I.	Micr. I.	Index.	Circle II.	Micr. II.	Index.	Sidereal Time and Circle Readings.
h m s	° ′	′ ″	′ ″	° ′	′ ″	′ ″	
12 10 11	53 11	1 43	0 48	233 16	1 15	5 22	
		1 42	0 50		1 14	5 21	
14 24	53 3	4 36	0 48	233 8	4 8	5 22	h m s
(Prism rotated.)		4 34	0 49		4 3	5 22	20 57 30
21 2	52 37	7 0	0 51	232 41	6 29	5 20	° ′ ″
		6 59	0 50		6 26	5 21	232 52 9
25 53	52 28	8 44	0 52	232 33	8 11	5 23	
		8 43	0 51		8 11	5 23	

Victoria and D. M. — 4°·4861. (m) (31)

Time by Chronometer.	Circle I.	Micr. I.	Index.	Circle II.	Micr. II.	Index.	Sidereal Time and Circle Readings.
h m s	° ′	′ ″	′ ″	° ′	′ ″	′ ″	
12 32 45	232 21	1 1	0 50	52 25	0 13	5 20	
		0 58	0 50		0 13	5 19	
37 20	232 14	5 6	0 52	52 18	4 11	5 20	h m s
(Prism rotated.)		5 3	0 53		4 10	5 18	21 20 10·5
43 22	232 9	9 43	0 51	52 13	8 50	5 21	° ′ ″
		9 42	0 51		8 49	5 19	232 13 11·5
48 30	232 1	1 4	0 55	52 5	0 13	5 17	
		1 5	0 55		0 10	5 20	

Victoria and D. M. — 4°·4855. (k) (32)

Time by Chronometer.	Circle I.	Micr. I.	Index.	Circle II.	Micr. II.	Index.	Sidereal Time and Circle Readings.
h m s	° ′	′ ″	′ ″	° ′	′ ″	′ ″	
12 56 55	236 49	0 41	0 57	56 54	9 42	5 18	
		0 39	0 58		9 40	5 20	
13 2 30	236 59	0 10	0 56	57 4	9 11	5 20	h m s
(Prism rotated.)		0 9	0 55		9 10	5 19	21 44 56·5
7 59	237 4	5 0	0 58	57 8	4 0	5 17	° ′ ″
		5 0	0 57		4 1	5 17	57 3 48·5
13 21	237 13	3 52	0 55	57 17	2 56	5 17	
		3 53	0 57		2 53	5 16	

Focal point 29·0. Axis preceding. I. 2–3; S. 2–3.
$12^h\ 30^m$. Turned 180° in position-angle.

Temperature of tube at h m 11 31 = 18°·85 Réaum.
" " 13 18 = 17·65 "

h m s 10 48 11 by chronometer = h m 19 49 30·3 Sidereal time.
13 31 41 " = 22 11 28·6 "

1889, AUGUST 4.

Victoria and D. M. — 4°·4843. (g) (33)

Time by Chronometer.	Circle I.	Micr. I.	Index.	Circle II.	Micr. II.	Index.	Sidereal Time and Circle Readings.
h m s	° ′	′ ″	′ ″	° ′	′ ″	′ ″	
11 47 18	28 28	8 55	0 51	208 33	8 30	5 18	
		8 58	0 50		8 27	5 18	
53 55	28 34	5 28	0 52	208 39	5 6	5 16	h m s
(Prism rotated.)		5 31	0 51		5 0	5 16	20 48 31·5
12 1 10	28 48	8 52	0 51	208 53	8 24	5 17	° ′ ″
		8 50	0 53		8 23	5 19	208 43 57·5
6 5	28 54	5 47	0 53	208 59	5 23	5 17	
		5 45	0 53		5 18	5 17	

Victoria and D. M. — 5°·5021. (i) (34)

Time by Chronometer.	Circle I.	Micr. I.	Index.	Circle II.	Micr. II.	Index.	Sidereal Time and Circle Readings.
h m s	° ′	′ ″	′ ″	° ′	′ ″	′ ″	
12 16 54	35 45	5 28	0 55	215 49	5 2	5 16	
		5 28	0 53		4 55	5 17	
23 20	35 38	8 53	0 52	215 43	8 20	5 18	h m s
(Prism rotated.)		8 50	0 52		8 15	5 17	21 19 34
31 2	35 24	4 52	0 51	215 29	4 20	5 17	° ′ ″
		4 52	0 53		4 16	5 17	215 33 37
41 4	35 18	8 46	0 52	215 23	8 6	5 17	
(Prism rotated.)		8 45	0 52		8 2	5 18	

Digitized by Google

1889, AUGUST 4—*continued.*

Victoria and D. M. — 5°·502r. (i) (35)

Time by Chronometer.	Circle I.	Micr. I.	Index.	Circle II.	Micr. II.	Index.	Sidereal Time and Circle Readings.
h m s	° ′	′ ″	′ ″	° ′	′ ″	′ ″	
12 49 6	215 11	2 8	0 53	35 16	1 13	5 14	
		2 5	0 52		1 10	5 14	
53 46	215 9	0 18	0 56	35 14	9 20	5 14	h m s
(Prism rotated.)		0 18	0 56		9 18	5 15	21 48 20
59 2	215 7	8 7	0 53	35 12	7 5	5 14	° ′ ″
		8 7	0 54		7 5	5 14	35 9 45
13 5 9	215 2	2 40	0 51	35 7	1 42	5 14	
		2 40	0 53		1 38	5 13	

Victoria and D. M. — 4°·4843. (g) (36)

Time by Chronometer.	Circle I.	Micr. I.	Index.	Circle II.	Micr. II.	Index.	Sidereal Time and Circle Readings.
h m s	° ′	′ ″	′ ″	° ′	′ ″	′ ″	
13 21 38	209 58	9 13	0 57	30 3	8 12	5 14	
		9 16	0 58		8 10	5 14	
31 20	210 9	0 13	1 0	30 13	9 10	5 14	h m s
(Prism rotated.)		0 10	0 59		9 10	5 15	22 25 32
37 5	210 7	8 4	0 58	30 12	6 58	5 13	° ′ ″
		8 3	0 59		6 54	5 14	30 10 17
45 25	210 17	8 15	0 59	30 22	7 7	5 15	
		8 11	1 0		7 4	5 13	

Focal point 29·0. Axis preceding. I. 3; S. 3.

Temperature of tube at $11^h\ 45^m = 19°.0$ Réaum.
" " $13\ 49 = 18°.0$ "
$12^h\ 45^m$. Rotated 180° in position-angle.
Sky completely covered by cloud at $13^h\ 50^m$.

$11^h\ 20^m\ 52^s$ by chronometer $= 20^h\ 11^m\ 47^s·5$ Sidereal time.
$13\ 57\ 14·5$ " $= 22\ 48\ 55·8$ "

BAMBERG.

Run for Position Circle observations, I. — 0″·5; II. — 2″·1.
No correction for run is applied in distance, none apparently necessary: the micrometrical equivalent of 1^s from the mean of all the observations being $= 4^r·0028$.
No readings of barometer and external thermometer were taken. The following data are supplied from the observations of the Meteorological Observatory at Bamberg :—

Date.	Barometer 0°.	Thermometer.	Minimum of temperature during following night.
	mm	°	°
June 26, 8 p.m.	736·6	23·5 C.	10·8
July 11, "	36·5	24·8	19·5
18, "	34·3	16·3	9·9
20, "	34·0	18·2	13·2
22, "	34·1	18·1	15·0
31, "	39·5	17·8	9·8
August 1, "	36·6	21·3	7·3
4, "	35·3	23·5	14·1

On July 20, and again July 31, occurs a note that the eye-piece was found to be screwed out to a small extent by rotating the prism. It is understood that the setting was restored before the measurement, against which the note is placed, was made.

Digitized by Google

Digitized by Google

CAPE

OBSERVATIONS OF SAPPHO

IN

1889.

Digitized by Google

CAPE OBSERVATIONS OF SAPPHO.—DISTANCES.

Chronometer Time.	Readings of Scale.	Cape Sid. Time. — Distance.	Chronometer Time.	Readings of Scale.	Cape Sid. Time. — Distance.
		1889, September 18. GILL.			
	Sappho and + 17°·183. (μ) (1)			Sappho and + 16°·123. (ζ) (2)	
h m s	r	h m s	h m s	r	h m s
22 10 10	157 243 4·574	22 14 40·9	22 23 58	45 356 2·081	22 25 24·3
13 43	·338	″	24 55	1·960	″
17 51	42 357 3·896	4588·094	27 3	155 246 2·163	4409·509
19 35·5	·933		28 17	·201	
				Reversed Position Circle.	
	Sappho and + 16°·123. (ζ) (3)			Sappho and + 17°·183. (μ) (4)	
22 32 21	155 246 2·406	h m s	22 48 20	42 357 5·443	h m s
35 0·5	·629	22 34 55·0	53 55	·730	22 54 30·4
36 55	45 355 5·499	″	58 39·5	157 243 2·055	″
37 59·5	·523	4405·341	59 43	·020	4608·681
		Chronometer Slow.			B t T
Run + 16·6.		h m s			h m in. ° °
I. 1–2; S. 2.		At 21 53 — 39·0			At 22 0 30·34 56·7 55·2
					23 2 30·33 56·3 55·1
		1889, September 18. GILL.			
	Sappho and + 17°·166. (ε) (5)			Sappho and + 15°·185. (λ) (6)	
h m s	r	h m s	h m s	r	h m s
3 26 18	48 352 3·797	3 29 12·2	3 38 59·5	165 236 4·668	3 42 50·1
28 6	·740	″	42 39	·640	″
30 46·5	152 249 4·318	4146·866	45 2·5	35 365 3·398	5185·641
34 13	·386		47 14	·323	
				Reversed Position Circle.	
	Sappho and + 15°·185. (λ) (7)			Sappho and + 17°·166. (ε) (8)	
3 50 32	35 365 3·090	h m s	4 5 7	151 248 4·542	h m s
51 41	·202	3 53 30·1	8 5	·511	4 9 31·8
55 23	164 235 5·000	″	12 55	48 352 3·539	″
58 59	·025	5182·754	14 35	·420	4144·498
		Chronometer Slow.			B t T
Run + 18·1.		h m s			h m in. ° °
I. 2–3; S. 2–3.		At 4 30 — 38·7			At 3 20 30·30 54·2 54·0
					4 20 30·29 54·1 54·1

Digitized by Google

1889, September 19. GILL.

Sappho and + 17°·183. (μ) (9)

Chronometer Time.	Readings of Scale.	Cape Sid. Time. — Distance.
h m s	r	h m s
22 20 7	35 365 5·170	22 23 22·1
21 54	·164	′
25 47	165 236 2·590	5205·335
28 18	·501	

Sappho and + 16°·123. (ζ) (10)

Chronometer Time.	Readings of Scale.	Cape Sid. Time. — Distance.
h m s	r	h m s
22 35 8	147 253 3·415	22 37 42·4
36 40	·501	′
38 29	52 347 4·308	3793·041
43 10	·220	

Reversed Position Circle.

Sappho and + 16°·123. (ζ) (11)

Chronometer Time.	Readings of Scale.	Cape Sid. Time. — Distance.
22 47 12	52 347 4·025	h m s
48 5	·131	22 48 50·6
50 4	147 253 4·050	′
52 39	·180	3788·800

Sappho and + 17°·183. (μ) (12)

Chronometer Time.	Readings of Scale.	Cape Sid. Time. — Distance.
22 58 1	165 235 4·962	
59 12	·897	h m s
23 1 45	35 366 3·270	23 1 29·4
4 55	·457	′
6 7	·541	5224·946
9 57	·627	

Chronometer Slow.

h m s	B in.	t °	T °
Run + 15·0.			
I. 1-2; S. 2.			
At 21 44 — 39·4			
At 22 15	30·08	56·8	55·0
9 48 — 39·5			
23 15	30·06	56·2	52·6

1889, September 22. GILL.

Sappho and + 16°·129. (κ) (13)

Chronometer Time.	Readings of Scale.	Cape Sid. Time. — Distance.
h m s	r	h m s
22 12 29	144 255 5·710	22 15 35·0
14 41	·530	′
17 28	55 345 2·676	3573·853
20 27	·736	

Sappho and + 16°·123. (ζ) (14)

Chronometer Time.	Readings of Scale.	Cape Sid. Time. — Distance.
h m s	r	h m s
22 27 25	77 322 4·989	22 32 9·3
28 38	5·039	′
32 21	122 278 3·203	1791·827
42 58	·782	

Reversed Position Circle.

Sappho and + 16°·123. (ζ) (15)

Chronometer Time.	Readings of Scale.	Cape Sid. Time. — Distance.
23 3 4	122 278 4·720	h m s
4 39	·685	23 4 39·3
6 23	77 322 3·264	′
7 16	·113	1776·562

Sappho and + 16°·129. (κ) (16)

Chronometer Time.	Readings of Scale.	Cape Sid. Time. — Distance.
23 13 56	55 345 5·668	h m s
15 4	·686	23 27 39·7
41 26	145 255 4·930	′
42 57	·860	3612·488

Chronometer Slow.

h m s	B in.	t °	T °
Run + 14·4.			
I. 3; S. 3.			
At 21 50 — 41·3			
At 22 4	30·13	49·5	46·9
9 50 — 39·9			
23 48	30·16	49·0	47·5

1889, September 23. GILL.

Sappho and + 16°·129. (κ) (17)

Chronometer Time.	Readings of Scale.	Cape Sid. Time. — Distance.
h m s	r	h m s
22 1 51	153 247 3·795	22 4 6·9
3 11	·770	′
5 49	46 353 4·353	4273·345
8 14	·521	

Sappho and + 15°·164. (α) (18)

Chronometer Time.	Readings of Scale.	Cape Sid. Time. — Distance.
h m s	r	h m s
22 14 48	33 367 2·730	22 16 43·0
16 9	·711	′
18 49	166 233 5·457	5338·735
19 43	·489	

Reversed Position Circle.

Digitized by Google

Chronometer Time.	Readings of Scale.	Cape Sid. Time. — Distance.	Chronometer Time.	Readings of Scale.	Cape Sid. Time. — Distance.
1889, September 23. GILL—*continued*.					
	Sappho and + 15°·164. (α) (19)			Sappho and + 16°·129. (κ) (20)	
h m s	r	h m s	h m s	r	h m s
22 22 15	166 233 5·648	22 24 27·0	22 33 44	46 354 2·091	22 35 48·5
23 31	·671	″	35 31	·166	″
26 22	33 367 2·222	5335·166	37 34	153 246 5·743	4292·038
28 17	·173		39 2	·708	
Run + 13·0.		Chronometer Slow.		B t T	
(17) and (18). I. 2–3; S. 2–3.		h m s		h m in. ° °	
(19) and (20). I. 1–2; S. 2.		At 21 50 — 39·4		At 21 55 30·39 48·5 47·0	
				22 45 30·39 48·0 46·3	
1889, September 23. GILL.					
	Sappho and + 15°·177. (ι) (21)			Sappho and + 16°·119. (γ) (22)	
h m s	r	h m s	h m s	r	h m s
3 51 23	141 258 5·870	3 53 27·9	4 3 4	49 350 4·670	4 4 28·7
52 39	·872	″	4 4	·598	″
55 1	58 342 2·159	3329·120	6 1	150 250 3·512	4035·572
57 23	·114		7 20	·438	
				Reversed Position Circle.	
	Sappho and + 16°·119. (γ) (23)			Sappho and + 15°·177. (ι) (24)	
4 11 5	150 250 3·511	4 13 14·7	4 23 24	58 341 5·590	4 26 30·8
13 4	·541	″	26 2	·521	″
14 58	49 350 4·566	4034·561	28 47	141 259 2·612	3322·550
16 26	·502		30 24	·647	
Run + 15·6.		Chronometer Slow.		B t T	
I. 1; S. 2.		h m s		h m in. ° °	
		At 4 44 — 38·5		At 3 45 30·33 44·1 41·0	
				4 35 30·32 43·9 40·0	
1889, September 24. GILL.					
	Sappho and + 16°·129. (κ) (25)			Sappho and + 15°·164. (α) (26)	
h m s	r		h m s	r	h m s
22 8 45	37 363 2·310		22 24 19	157 243 4·975	22 26 12·5
10 53·5	·466	h m s	25 16·5	5·073	″
13 26·5	·435	22 14 31·0	28 23·5	43 358 2·900	4579·666
14 48	·601	″	29 26·5	·739	
17 36·5	162 237 5·128	5018·504			
19 6·5	·072			Reversed Position Circle.	

Digitized by Google

Chronometer Time.	Readings of Scale.	Cape Sid. Time. — Distance.
	1889, September 24. GILL—*continued.*	
	Sappho and + 15°·164. (α) (27)	
h m s	r	
22 32 15·5	44 358 2·796	
36 30·5	43 358 2·490	h m s
38 50·5	·290	22 42 17·6
40 59·5	·316	"
43 38	157 243 5·840	4572·201
48 53·5	157 244 2·121	
50 28·5	·298	
51 56	·430	
	Chronometer Slow.	
Run + 17·3.	h m s	
I. 2 ; S. 2–3.	At 20 24 — 39·0	
	9 50 — 38·0	

Chronometer Time.	Readings of Scale.	Cape Sid. Time. — Distance.
	Sappho and + 16°·129. (κ) (28)	
h m s	r	
22 56 29·5	163 238 2·800	
59 19·5	·675	h m s
23 2 3	37 363 5·511	23 0 7·1
3 10	·520	"
4 11	·540	5045·915
5 6	·611	
	B t T	
	h m in. ° °	
	At 22 2 30·26 49·0 45·8	
	23 9 30·25 48·6 45·3	

	1889, September 25. GILL.	
	Sappho and + 16°·129. (κ) (29)	
h m s	r	
22 9 24	172 228 5·027	h m s
11 53	4·890	22 14 0·2
16 55	28 373 3·558	"
20 20	·700	5786·926
	Sappho and + 15°·164. (α) (31)	
22 40 59	147 253 3·545	h m s
43 17	·820	22 44 18·6
45 16	52 347 4·105	"
50 13	3·810	3790·370
	Chronometer Slow.	
Run + 17·2.	h m s	
I. 3 ; S. 3.	At 21 55 — 37·8	

h m s		
22 26 33	Sappho and + 15°·164. (α) (30)	
29 6	r	
31 46	52 347 5·170	h m s
34 46	4·955	22 29 55·1
	147 253 3·206	"
	·377	3797·900
	Reversed Position Circle.	
22 55 25	Sappho and + 16°·129. (κ) (32)	
56 44	27 373 1·953	h m s
59 19	2·030	22 57 46·6
23 2 9	172 228 1·910	"
	·895	5814·109
	B t T	
	h m in. ° °	
	At 22 5 30·29 56·8 56·2	
	23 5 30·28 56·1 56·0	

	1889, September 25. GILL.	
	Sappho and + 16°·116. (β) (33)	
h m s	r	
3 20 52	151 249 3·330	h m s
22 8	·368	3 23 33·0
26 14	48 351 4·717	"
27 28	·723	4116·518
h m s		
3 37 19	Sappho and + 15°·177 (ι) (34)	
40 33	r	
43 35	59 342 2·448	h m s
45 50	·478	3 41 11·8
	141 259 5·547	"
	·619	3292·136
	Reversed Position Circle.	

Digitized by Google

Chronometer Time.	Readings of Scale.	Cape Sid. Time. — Distance.	Chronometer Time.	Readings of Scale.	Cape Sid. Time. — Distance.
1889, September 25. GILL—*continued*.					
	Sappho and + 15°·177. (ι) (35)			Sappho and + 16°·116. (β) (36)	
h m s	r	h m s	h m s	r	h m s
3 49 12	141 259 5·416	3 53 19·0	4 5 17	49 352 4·561	4 10 37·8
52 27	·676	′	9 41	·517	′
56 23	59 342 2·616	3293·556	11 35	151 249 3·700	4114·029
57 44	·800		14 45	·712	
			16 29	·732	
			17 16	·533	
Run + 18·7. I. 3; S. 3–4 for 1st half set; I. 3–4; S. 4 for 2nd half set.		Chronometer Slow. h m s At 4 30 — 37·4 Observations very unsatisfactory.			B in. t ° T ° At 3 19 30·27 55·5 57·2 4 21 30·25 56·0 56·4
1889, September 26. GILL.					
	Sappho and + 15°·175. (θ) (37)			Sappho and + 15°·164. (α) (38)	
h m s	r	h m s	h m s	r	h m s
22 26 35	69 330 4·500	22 27 16·1	22 32 12·5	137 263 3·321	22 33 52·1
27 11	·517	′	33 57	·432	′
28 30	130 270 3·478	2430·665	35 11·5	62 337 4·643	2993·191
29 16·5	·548		36 35·5	·553	
				Reversed Position Circle.	
	Sappho and + 15°·164. (α) (39)			Sappho and + 15°·175. (θ) (40)	
22 38 18·5	62 337 4·371	h m s 22 41 39·6	22 50 9	130 270 2·185	h m s 22 51 30·5
42 1·5	·170	′	51 16·5	·255	′
43 47·5	137 263 3·993	2988·590	53 4·5	69 331 1·991	2444·634
44 59	·934		54 0	2·031	
Run + 18·9. 1st half, I. 2; S. 2–3. 2nd ,, I. 1–2; S. 2.		Chronometer Slow. h m s At 19 15 — 37·0			B in. t ° T ° At 22 22 30·26 62·0 59·8 22 58 30·26 61·0 57·8
1889, September 26. GILL.					
	Sappho and + 16°·119. (γ) (41)			Sappho and + 13°·175. (η) (42)	
h m s	r	h m s	h m s	r	h m s
3 23 23	158 242 2·639	3 24 54·0	3 32 21	21 378 3·370	3 34 0·7
24 37	·576	′	33 2·5	·450	′
26 28·5	41 358 5·574	4685·895	35 58·5	178 222 4·760	6267·804
27 35	·577		37 8·5	·810	
				Reversed Position Circle.	

Digitized by Google

Chronometer Time.	Readings of Scale.	Cape Sid. Time. — Distance.	Chronometer Time.	Readings of Scale.	Cape Sid. Time. — Distance.
1889, September 26. GILL—*continued*.					
	Sappho and + 13°·175. (η) (43)			Sappho and + 16°·119. (γ) (44)	
h m s	r	h m s	h m s	r	h m s
3 39 35	178 222 4·859	3 41 35·1	3 50 44	41 359 2·223	3 52 15·9
41 4	·949	″	52 3·5	·218	″
42 46·5	22 379 3·045	6265·098	53 36	158 241 5·850	4692·893
45 22·5	2·920		55 7·5	·791	
	Chronometer Slow.			B t T	
Run + 17·4.	h m s			in. ° °	
I. 1–2; S. 2.	At 4 8 — 36·9		At 3 18	30·21 57·5	54·0
			4 0	30·20 56·2	52·9
1889, September 27. GILL.					
	Sappho and + 15°·164. (α) (45)			Sappho and + 16°·123. (ζ) (46)	
h m s	r	h m s	h m s	r	h m s
22 6 24	127 273 4·110	22 8 19·2	22 14 59	73 327 3·548	22 18 11·0
7 57	·221	″	17 2	·487	″
10 10	72 327 3·585	2182·346	20 39	126 273 4·299	2141·395
11 10	·630		22 28	·187	
				Reversed Position Circle.	
	Sappho and + 16°·123. (ζ) (47)			Sappho and + 15°·164. (α) (48)	
22 26 53	127 274 3·844	h m s	22 36 8	73 328 2·211	
27 59	·891	22 28 16·8	38 11	·010	h m s
29 44	73 327 4·377	″	39 1	1·972	22 41 33·0
30 55	·390	2147·630	40 32	·873	″
			42 29	127 274 2·200	2163·096
			45 12	·388	
			47 18	·495	
			48 21	·547	
	Chronometer Slow.			B t T	
Run + 18·6.	h m s			in. ° °	
I. 3; S. 3.	At 21 55 — 36·1		At 22 2	30·22 66·1	68·0
			22 52	30·21 66·5	68·0
1889, September 27. FINLAY.					
	Sappho and + 16°·119. (γ) (49)				
h m s	r	h m s			
2 56 41	164 236 4·445	2 59 39·4	Clouded up after first 2 pointings of 13°·175. (η)		
58 53	·274	″	Morning observations therefore useless.		
3 1 40	36 365 3·922	5149·780			
3 45	·898				
	Chronometer Slow.			B t T	
Run + 10·8.	h m s			in. ° °	
I. 3; S. 3.	At 3 38 — 35·3		At 2 50	30·19 65·0	64·3
			3 30	30·17 63·5	59·3

Digitized by Google

Chronometer Time.	Readings of Scale.	Cape Sid. Time. — Distance.	Chronometer Time.	Readings of Scale.	Cape Sid. Time. — Distance.
1889, September 28. GILL.					
	Sappho and + 15°·159. (z) (50)			Sappho and + 14°·175. (δ) (51)	
h m s	r		h m s	r	h m s
3 51 13·5	129 271 3·167	h m s	4 5 12·5	77 322 4·157	4 8 25·1
52 35	·115	3 53 22·9	7 59·5	·179	″
54 25	70 329 4·820	″	10 13	122 278 4·018	1785·107
57 25	·740	2353·800	12 22	3·947	
				Reversed Position Circle.	
	Sappho and + 14°·175. (δ) (52)			Sappho and + 15°·159. (z) (53)	
4 14 39	122 278 4·055	h m s	4 33 21·5	70 329 3·709	h m s
20 40·5	·040	4 20 47·0	34 59·5	·542	4 37 40·8
24 3	77 322 3·769	″	36 35·5	·752	″
25 52	·717	1782·643	38 49	·579	2341·372
			39 58	129 271 4·475	
			40 58·5	·483	
Run + 10·6.		Chronometer Slow.		B t T	
1st half, I. 3; S. 3.		h m s		h m in. ° °	
2nd ,, I. 4; S. 3.		At 3 37 — 31·8		At 3 45 30·10 59·5 58·8	
		4 54 — 31·5		4 45 30·11 59·0 58·9	
1889, September 29. GILL.					
	Sappho and + 16°·123. (ζ) (54)			Sappho and + 14°·163. (x) (55)	
h m s	r		h m s	r	
22 5 19	148 253 2·955		22 15 27	43 357 1·973	
5 57	·944		16 15	2·244	
6 35	·761	h m s	18 42	1·965	h m s
7 3	·827	22 7 14·3	19 36	·891	22 19 25·7
8 13	52 348 5·300	″	21 12	156 244 2·200	″
8 55	·368	3841·776	21 58	·385	4529·229
9 28	·400		22 55	·272	
10 33	·540		23 29	·335	
				Reversed Position Circle.	
	Sappho and + 14°·163. (x) (56)			Sappho and + 16°·123. (ζ) (57)	
22 26 8	156 244 2·568		22 37 43	52 349 3·320	
26 55	·559		38 48	·408	
27 52	·720	h m s	39 27	·418	h m s
28 38	·605	22 28 45·4	40 0	·428	22 40 33·7
29 47	43 356 5·320	″	41 16	148 252 4·499	″
30 41	·270	4523·800	42 31	·433	3864·167
31 21	·198		43 34	·371	
32 50	·185		45 19	·237	
Run + 14·7.		Chronometer Slow.		B t T	
1st half, I. 2–3; S. 2–3.		h m s		h m in. ° °	
2nd ,, I. 2; S. 2.		At 21 57 — 31·1		At 22 2 30·25 59·1 55·2	
		22 59 — 31·1		22 48 30·25 58·3 55·5	

Digitized by Google

1889, September 30. GILL.

Sappho and + 14°·163. (x) (58)

Chronometer Time.	Readings of Scale. r	Cape Sid. Time. — Distance.
h m s		
22 12 4·5	145 255 2·092	
14 22	·194	
15 19	·377	h m s
16 39·5	·539	22 17 22·0
18 36·5	54 345 5·600	′
20 38	·457	3644·407
22 24	·368	
23 2	·368	

Sappho and + 16°·123. (ζ) (59)

Chronometer Time.	Readings of Scale. r	Cape Sid. Time. — Distance.
h m s		
22 32 59·5	41 360 3·318	
34 10	·394	
34 52·5	·430	h m s
36 1	·540	22 36 34·9
37 28	159 241 4·490	′
39 14·5	·335	4746·581
40 37	·236	
41 26	·203	

Reversed Position Circle.

Sappho and + 16°·123. (ζ) (60)

Chronometer Time.	Readings of Scale. r	Cape Sid. Time. — Distance.
22 43 47·5	159 241 4·128	
44 59	3·971	
45 57	·873	h m s
47 0	·795	22 48 0·4
50 7	40 359 4·399	′
51 0	·419	4754·040
52 2·5	·584	
53 19·5	·720	

Sappho and + 14°·163. (x) (61)

Chronometer Time.	Readings of Scale. r	Cape Sid. Time. — Distance.
22 59 27·5	54 345 3·063	
23 0 24	·039	
1 13·5	55 346 2·907	h m s
2 22	·930	23 3 23·7
4 14·5	145 255 5·270	′
5 2	·395	3616·183
8 55	·497	
9 41	·640	

Run + 14·2.
I. 2-3; S. 2-3

Chronometer Slow.
h m s
At 21 57 — 31·2

	B	t	T
h m	in.	°	°
At 22 10	30·32	55·2	50·1
23 12	30·31	53·8	51·7

1889, September 30. GILL.

Sappho and + 15°·154. (u) (62)

Chronometer Time.	Readings of Scale. r	Cape Sid. Time. — Distance.
h m s		
3 47 6·5	153 248 4·727	h m s
48 23	·732	3 49 7·9
50 39	47 353 3·330	′
52 27	·301	4222·873

Sky clouded up; morning observations therefore useless.

Run + 14·2.
I. 2-3; S. 2-3

Chronometer Slow.
h m s
At 4·18 —31·0

1889, October 1. GILL.

Sappho and + 15°·164. (α) (63)

Chronometer Time.	Readings of Scale. r	Cape Sid. Time. — Distance.
h m s		
21 57 1	116 283 4·149	
58 12	·050	
59 54	3·940	h m s
22 1 4	·827	22 1 18·4
3 6	83 317 4·171	′
4 39	·408	1344·798
6 11	·448	

Sappho and + 14°·168. (y*) (64)

Chronometer Time.	Readings of Scale. r	Cape Sid. Time. — Distance.
h m s		
22 20 4	71 328 5·745	
20 46	·750	h m s
21 38	·606	22 23 13·9
25 30	128 272 2·471	′
26 46	·560	2281·180
27 54	·645	

Reversed Position Circle.

Digitized by Google

1889, October 1. GILL—*continued.*

Chronometer Time.	Readings of Scale.	Cape Sid. Time. / Distance.	Chronometer Time.	Readings of Scale.	Cape Sid. Time. / Distance.
	Sappho and + 14°·168. (y*) (65)			Sappho and + 15°·164. (*a*) (66)	
h m s	r		h m s	r	
22 29 47	128 272 2·807		22 43 36	82 317 2·940	
31 5	·803		44 52	3·035	
32 56	·979	h m s	46 0	·071	h m s
34 23	3·109	22 34 6·6	46 44	·035	22 47 47·9
35 32	71 328 4·863	″	49 52	117 283 4·746	″
36 27	·757	2274·496	50 45	·613	1375·163
37 18	·753		52 6	·601	
39 44	·581		52 47	·507	
	Sappho and + 15°·164. (*a*) (67)			Sappho and + 14°·168. (y*) (68)	
22 56 12	117 283 4·267		23 9 57	72 329 2·835	
57 8	·277		11 56	·712	
59 22	·156	h m s	12 54	·591	h m s
		22 59 41·1	13 30	·595	23 13 49·0
23 1 17	83 318 4·100	″	14 49	128 272 5·581	″
2 11	·080	1382·768	15 54	·624	2250·338
3 4	·132		17 7	·727	
5 0	82 317 4·281		18 44	·737	

Chronometer Slow.

Run + 19·5.
(63) and (64), I. 2–3; S. 2–3. (65) to (68), I. 2; S. 2.

At 21h 47m — 32s·4

	B	t	T
At 22h 54m	30·40 in.	55·5°	54·0°
23 22	30·40	55·0	53·1

1889, October 1. GILL.

Chronometer Time.	Readings of Scale.	Cape Sid. Time. / Distance.	Chronometer Time.	Readings of Scale.	Cape Sid. Time. / Distance.
	Sappho and + 15°·154. (u) (69)			Sappho and + 13°·175. (η) (70)	
h m s	r		h m s	r	
3 22 49	150 250 3·941		3 42 20	40 360 5·635	
23 48	·910		43 50	·663	h m s
25 45	·855	h m s	44 42	·580	3 48 7·8
29 8	·807	3 29 8·6	45 28	·630	″
31 53	49 350 4·107	″	49 18	160 241 2·377	4807·372
33 42	·030	4030·401	52 31	·389	
34 53	·130		54 43	·373	
35 28	3·969		56 27	·521	

Chronometer Slow.

Run + 19·5.
I. 3–4; S. 3–4.

At 4h 48m — 32s·1

	B	t	T
At 3h 15m	30·30 in.	54·0°	54·0°
4 40	30·28	54·0	54·0

Observations in last degree unsatisfactory. I was completely fatigued with the endeavour to make exact measures of such faint and diffuse objects. The last 16 pointings in the morning are not printed. They are noted as worthless.

Digitized by Google

Chronometer Time.	Readings of Scale.	Cape Sid. Time. — Distance.	Chronometer Time.	Readings of Scale.	Cape Sid. Time. — Distance.
		1889, October 2. GILL.			
	Sappho and + 15°·154. (u) (71)			Sappho and + 13°·175. (η) (72)	
h m s	r		h m s	r	
3 8 41	150 250 3·330		3 27 19	38 362 3·894	
9 44	·375		29 9	·899	
11 19	·460	h m s	30 51	·846	h m s
12 9	·375	3 13 6·2	33 3	·942	3 32 52·3
14 12	49 350 4·680	″	35 7	162 239 4·074	″
16 18	·670	4036·090	36 14	·147	4950·764
17 55	·795		37 10	·022	
19 4	·638		38 38	·050	
				Reversed Position Circle	
	Sappho and + 13°·175. (η) (73)			Sappho and + 15°·154. (u) (74)	
3 40 54	162 239 4·098		3 58 33	49 350 4·760	
43 4	·059		59 47	·692	
44 10	·005	h m s	4 1 40	·735	h m s
45 36	3·955	3 46 21·5	4 15	·750	4 4 13·2
47 33	38 362 4·050	″	5 20	150 250 3·292	″
49 53	·081	4952·053	7 57	·310	4036·699
51 24	·172		9 37	·326	
52 51	·125		11 9	·278	
		Chronometer Slow.			B t T
Run + 19·0.		h m s			h m in. ° °
I. 1-2; S. 2-3; except last eight pointings in which I. 2-3; S. 3.		At 2 55 — 34·1			At 3 5 29·92 51·2 46·9
		4 25 — 34·1			4 15 29·92 49·5 45·0
		1889, October 3. GILL.			
	Sappho and + 14°·163. (x) (75)			Sappho and + 14°·163. (x) (76)	
h m s	r		h m s	r	
22 40 5	111 290 2·069		22 54 27	89 311 5·058	
41 23	·094		55 17	4·955	
42 11	·237	h m s	57 46	·851	h m s
42 49	·321	22 43 54·2	23 0 3	·630	22 59 52·7
45 21	89 311 5·588	″	1 44	111 290 3·368	″
46 57	·520	878·539	3 39	·605	868·508
48 3	·450		4 53	·615	
49 4	·322		5 51	·718	
	Reversed Position Circle.				
	Standard Stars. (77)				
23 18 26	180 220 3·009	h m s			
19 42	·032	23 20 49·5			
22 30	19 380 4·916	″			
24 59	·928	6444·770			
		Chronometer Slow.			B t T
Run + 16·9.		h m s			h m in. ° °
I. 2-3; S. 2-3.		At 22 14 — 34·9			At 22 25 30·03 55·0 51·7
		23 39 — 34·8			23 30 30·02 53·0 50·2

Digitized by Google

Chronometer Time.	Readings of Scale.	Cape Sid. Time. — Distance.	Chronometer Time.	Readings of Scale.	Cape Sid. Time. — Distance.
1889, October 4. GILL.					
	Sappho and + 14°·163. (x) (82)			Sappho and + 14°·163. (x) (83)	
h m s	r	° ′	h m s	r	° ′
22 50 8·5	101 298 3·390	274 38	23 3 33	98 302 5·213	271 42
52 4·5	·349	281 29	5 43	·295	277 45
53 31·5	·263	281 29	6 47·5	·261	277 45
54 34	·211	274 22	7 46·5	·301	271 38
57 15·5	98 302 4·959	272 30	9 35·5	102 299 2·645	277 9
59 10·5	5·011	279 11	11 21·5	·548	270 59
23 0 26	·060	279 11	12 12	·469	270 59
2 12·5	·113	272 31	14 55·5	·390	276 50
	h m s 22 55 40·1 ″ 149·047 Corr.= +0·267 ° ′ ψ = 3 25			h m s 23 8 24·5 ″ 154·226 Corr. + 0·218 ° ′ ψ = 3 2	
	Chronometer Slow. h m s At 21 7 — 34·8			B t T in. ° ° At 21 26 30·25 55·2 54·0 23 25 30·25 54·8 53·4	

Run + 18·5.
I. 1-2; S. 1-2.

The images could not be passed through each other satisfactorily on account of the small distance; they were superposed parallel to the fixed wires as in case of similar observations of Victoria. The position angles (printed in smaller type) in observations (82) and (83) serve to find the value of ψ required to correct the observations to true distances, *viz.*, observed distance × sec. ψ.

The Position Angles observed both evening and morning on October 4 will be found at the end of the Observations of Distance.

1889, October 4. GILL.					
	Sappho and + 14°·163. (x) (88)				
h m s	r				
4 5 31	104 296 5·759				
7 15·5	·860				
8 44	·582	h m s 4 10 39·6 ″ 326·207		No Standard Stars observed.	
10 12	·461				
11 53·5	96 305 2·600				
13 7	·690				
15 17	·810				
17 54	·939				
	Chronometer Slow. h m s At 4 44 — 34·7			B t T in. ° ° At 3 5 30·22 53·6 54·1 4 35 30·22 53·5 54·2	

Run + 18·5.
I. 3; S. 3.

1889, October 5. GILL.					
	Sappho and + 14°·163. (x) (90)			Sappho and + 13°·150. (t) (91)	
h m s	r		h m s	r	
21 54 22	87 313 2·155		22 9 9	128 271 3·736	
57 6	·291		12 23	·946	
58 49	·486	h m s 21 59 47·9 ″ 1007·644	13 8	4·062	h m s 22 15 3·1 ″ 2304·570
22 0 0	·548		14 3	·020	
1 23	112 287 5·508		17 22	71 329 3·889	
2 40	·280		18 47	·726	
3 55	·228		19 41	·761	
4 49	·183		20 32	·667	
				Reversed Position Circle.	

Digitized by Google

Chronometer Time.	Readings of Scale.	Cape Sid. Time. — Distance.	Chronometer Time.	Readings of Scale.	Cape Sid. Time. — Distance.
	1889, October 5. GILL—*continued.*				
	Sappho and + 13°·150. (t) (92)			Sappho and + 14°·163. (x) (93)	
h m s	r		h m s	r	
22 22 45	71 329 3·466		22 39 18	113 288 2·720	
25 14	·372		40 54	·678	
26 3	·284		42 35	·548	
27 4	·185	h m s	44 2	·487	h m s
27 58	128 271 4·910	22 27 36·2	48 9	87 314 1·858	22 45 7·6
29 31	5·028	′	48 55	2·020	1039·431
30 28	·143	2296·449	50 21	·025	
31 55	·143		51 27	·167	
32 58	·190				
33 45	·310				
		Chronometer Slow.			B t T
Run + 16·3.		h m s			h m in. ° °
I. 3; S. 2–3.		At 21 45 — 35·1			At 21 50 30·19 62·0 60·7
		12 18 — 32·7			22 55 30·17 62·2 62·8
	1889, October 6. GILL.				
	Sappho and + 14°·163. (x) (94)			Sappho and + 13°·150. (t) (95)	
h m s	r		h m s	r	
21 56 46·5	124 275 5·855		22 32 1·5	83 317 2·675	
57 48·5	·707		33 13·5	·608	
22 15 16	4·571	h m s	34 15·5	·490	h m s
18 56	·461	22 15 54·8	36 13	·443	22 37 12·0
23 26	75 325 4·047	′	38 7·5	116 283 5·870	′
24 53	·230	1980·110	40 39·5	·988	1325·245
26 38·5	·405		43 20	6·203	
28 1·5	·398		44 13·5	·309	
				Position Circle not reversed, because handle came in an inconvenient position.	
	Sappho and + 13°·150. (t) (96)			Sappho and + 14°·163. (x) (97)	
22 46 37	116 284 2·504		23 2 14·5	75 326 2·749	
48 21	·532		3 25	·790	
50 19·5	·654	h m s	5 3·5	·995	h m s
51 37·5	·745	22 51 28·0	5 35	3·018	23 5 48·4
52 54·5	83 316 5·245	′	6 47·5	125 275 4·929	′
54 16	·160	1315·445	7 48	·880	2014·948
55 19·5	·066		9 3·5	·789	
56 46·5	4·921		10 57	·683	
		Chronometer Slow.			B t T
Run + 11·8.		h m s			h m in. ° °
1st half, I. 3–4; S. 3.		At 21 43 — 33·5			At 21 50 30·00 71·0 73·0
2nd " I. 3; S. 2–3.		11 35 — 32·7			23 15 30·01 65·2 59·5

Digitized by Google

Chronometer Time.	Readings of Scale.	Cape Sid. Time. — Distance.	Chronometer Time.	Readings of Scale.	Cape Sid. Time. — Distance.
1889, October 7. GILL.					
	Sappho and + 13°·150. (t) (98)			Sappho and + 13°·150. (t) (99)	
h m s	r		h m s	r	
22 10 6	104 295 4·898		22 17 48	95 305 2·699	
11 33	·961		18 21	·626	h m s
12 34	5·075	h m s	18 58	·590	22 33 44·4
14 5	·167	22 13 32·0	42 7	95 304 4·995	Should be 54·4
15 6	95 305 2·921	′	43 36	104 296 3·190	′
15 44	·822	369·796	44 53	·218	355·971
16 22	·820				
17 3	·700				
	Chronometer Slow.			B t T	
	h m s			in. ° °	
	At 22 2 — 32·1			At 22 5 30·00 57·5 55·3	
				23 30 30·00 56·9 55·0	

Run + 12·0 (adopted).
I. 1–2 ; S. 1–2 ; but after first 8 pointings a sea-fog came up, which quickly stopped observations. Last 6 pointings were secured with great difficulty. Observations not utilized as Standard Stars were not observed.

1889, October 10. GILL.					
	Sappho and + 14°·163. (x) (100)			Sappho and + 11°·118. (l) (101)	
h m s	r		h m s	r	
21 57 39	173 227 3·467		22 9 41	36 364 4·077	
58 24·5	·481		11 10·5	·090	
22 0 11	·377	h m s	12 29·5	·015	h m s
0 49	·281	22 1 22·7	13 16	3·907	22 14 1·1
2 1	26 373 4·904	′	14 57·5	164 237 4·075	′
4 12·5	·946	5882·056	16 48	·311	5110·271
5 32	5·145		18 51·5	·470	
6 56·5	·191		19 39	·569	
	Sappho and + 11°·118. (l) (102)			Sappho and + 14°·163. (x) (103)	
22 20 56·5	164 237 4·634		22 34 14·5	26 374 3·320	
21 47	·655		35 17	·404	
22 59	·730		36 12	·443	
23 31	·771	h m s	37 0	·456	h m s
25 40	36 364 3·133	22 24 32·5	38 49·5	174 227 4·465	22 37 35·9
27 42	·015	′	39 54	·299	′
28 43	2·994	5103·460	41 29	·222	5909·521
29 45·5	·897		42 35	·112	
	Chronometer Slow.			B t T	
	h m s			in. ° °	
	At 21 46 — 35·5			At 21 55 30·18 55·9 53·6	
				22 55 30·18 54·7 53·0	

Run + 14·5.
I. 2–3 ; S. 2–3.

Digitized by Google

Chronometer Time.	Readings of Scale.	Cape Sid. Time. — Distance.	Chronometer Time.	Readings of Scale.	Cape Sid. Time. — Distance.
	1889, October 10. GILL.				
	Sappho and + 13°·130. (m) (104)			Sappho and + 12°·126. (v) (105)	
h m s	r		h m s	r	
2 49 17·5	165 235 3·740		3 4 4·5	61 339 5·732	
51 17·5	·671		4 56·5	·729	
52 17·5	·711		6 4·5	·720	h m s
53 15·5	·745	h m s 2 53 38·9	6 55·5	·775	3 8 2·5
55 21·5	34 365 4·490	″	8 43·5	139 262 2·336	″
56 26	·473	5236·223	10 42	·396	3124·344
57 21·5	·519		13 22·5	·383	
58 36·5	·544		14 13·5	·394	
	Sappho and + 12°·126. (v) (106)			Sappho and + 13°·130. (m) (107)	
3 15 23·5	139 262 2·408		3 30 14·5	34 365 4·775	
16 34	·418		31 34	·811	
17 31	·369		32 41	·825	h m s
18 27·5	·370	h m s 3 19 18·1	33 30·5	·771	3 34 51·6
20 37·5	61 339 5·688	″	36 53	165 235 3·279	″
22 22·5	·680	3123·921	38 13·5	·196	5240·147
23 17	·691		39 30·5	·244	
24 54	·617		40 58·5	·187	
Run + 19·7.		Chronometer Slow.		B t T	
I. 1; S. 1–2. Definition remarkably fine.		At h m s 3 54 — 35·3		h m in. ° ° At 2 45 30·16 50·2 45·0 3 45 30·14 49·5 46·3	
	1889, October 12. GILL.				
	Sappho and + 13°·155. (w) (108)			Sappho and + 12°·108. (i) (109)	
h m s	r		h m s	r	
22 7 52·5	158 243 2·871		22 20 7·0	49 351 2·204	
8 34	·880		21 4·5	·195	
9 16·5	·779	h m s	22 38·0	·045	h m s
10 29·5	·787	22 10 59·4	23 38·5	1·971	22 23 50·3
12 26·5	42 358 5·430	″	25 39·5	150 250 2·280	″
1 52	·650	4644·908	26 50·5	·182	4048·712
14 31	·671		27 30	·261	
15 49·5	·712		28 10	·347	
	Sappho and + 12°·108. (i) (110)			Sappho and + 13°·155. (w) (111)	
22 29 7·5	150 250 2·305		22 40 51·5	42 359 3·425	
29 55	·440		42 46·5	·581	
30 35	·439	h m s	43 30	·651	h m s
31 44	·535	22 32 8·1	44 25·5	·691	22 44 18·6
33 55·5	49 350 5·360	″	45 44·5	158 242 4·305	″
34 53	·380	4044·054	46 32·5	·157	4668·073
35 38·5	·275		47 26	·125	
36 12	·289		48 8	·091	
Run + 14·1.		Chronometer Slow.		B t T	
1st half, I. 2; S. 1–2.		At h m s 21 56 — 37·0		h m in. ° ° At 22 5 30·41 53·5 52·3	
2nd „ I. 1–2; S. 1–2				22 52 30·43 52·8 52·0	

Digitized by Google

Chronometer Time.	Readings of Scale.	Cape Sid. Time. — Distance.	Chronometer Time.	Readings of Scale.	Cape Sid. Time. — Distance.
1889, October 12. GILL.					
	Sappho and + 13°·130. (m) (112)			Sappho and + 11°·135. (s) (113)	
h m s	r		h m s	r	
2 50 55	25 375 2·718		3 7 57·5	163 237 2·287	
52 34	·731		12 59·5	·551	
53 15·5	·859	h m s	14 2	·550	h m s
53 54	·886	2 56 27·4	17 32·5	·505	3 18 48·6
59 16	174 225 5·012	″	21 24	36 363 5·249	″
3 1 3	4·960	5983·360	25 25	·294	5085·590
2 24·5	·922		27 11·5	·042	
3 13·5	·912		28 53	·210	
	Sappho and + 11°·135. (s) (114)			Sappho and + 13 ·130. (m) (115)	
3 30 7·5	36 363 5·257		3 49 9	175 226 3·593	
30 59·5	4·918		50 56	·520	
32 14·5	5·113	h m s	52 14·5	·441	h m s
32 55·5	4·979	3 34 33·4	52 58	·390	3 53 37·1
34 24	163 237 3·280	″	55 9·5	25 375 4·720	″
35 28·5	·218	5080·378	56 45·5	·780	6000·592
41 25·5	·519		57 33·5	·782	
43 48	·492		59 6·5	·790	
Run + 16·1.		Chronometer Slow.		B t T	
I. 3; S. 3.		h m s		h m in ° °	
		At 4 10 — 37·0		At 2 46 30·44 50·0 47·5	
				4 1 30·44 48·8 47·5	
1889, October 13. GILL.					
	Sappho and + 13°·127. (k) (116)			Sappho and + 11°·135. (s) (117)	
h m s	r		h m s	r	
3 3 20	50 350 2·217		3 15 17	158 242 4·335	
4 8	·258		16 49	·347	
5 4	·313	h m s	17 26	·460	
6 13	·337	3 6 6·2	18 9	·447	h m s
7 26	149 250 5·659	″	21 22 }	42 359 3·568 }	3 19 47·4
8 30	·730	3972·287	22 33 }	·481 }	″
9 11	·670		23 41 }	·580 }	4666·442
10 2	·675		25 6 }	·422 }	
			27 6 }	·437 }	
			27 42 }	·384 }	
	Sappho and + 11°·135. (s) (118)			Sappho and + 13°·127. (k) (119)	
3 28 55	42 359 3·367		3 42 36	149 250 4·993	
29 33	·353		43 44	·879	
30 11	·386	h m s	45 13	·990	h m s
31 44	·310	3 32 21·0	46 51	·928	3 47 48·3
34 4	158 242 4·826	″	48 39	50 350 3·184	″
35 18	·885	4663·318	52 5	·310	3981·042
36 30	·920		52 54	·327	
37 38	·897		55 30	·317	
Run + 15·9.		Chronometer Slow.		B t T	
I. 2–3; S. 2–3.		h m s		h m in. ° °	
		At 2 51 — 38·1		At 3 0 30·27 55·5 55·1	
		4 6 — 38·2		3 58 30·27 55·2 55·3	

Digitized by Google

Chronometer Time.	Readings of Scale.	Cape Sid. Time. — Distance.	Chronometer Time.	Readings of Scale.	Cape Sid. Time. — Distance.
		1889, October 14. GILL.			
	Sappho and + 13°·150. (t) (120)			Sappho and + 10°·105. (h) (121)	
h m s	r		h m s	r	
22 36 51	18 381 5·258		22 53 19·5	188 211 5·489	
37 44·5	·326		54 59·5	·676	
39 22·5	·569	h m s	56 44	·693	h m s
40 21·5	·581	22 41 59·2	57 50	·760	22 57 56·2
43 20·5	181 219 2·209	"	59 35·5	11 389 2·227	"
46 43·5	·010	6532·615	23 0 51	·129	7098·771
47 56	1·915		1 32	·010	
48 43·5	·921		3 48·5	1·883	
	Sappho and + 10°·105. (h) (122)			Sappho and + 13°·150. (t) (123)	
23 5 13·5	11 388 5·782		23 26 12·5	182 219 3·081	
6 21	·668		26 53·5	·090	
10 26	·346	h m s	27 20	·034	h m s
11 30	·343	23 11 22·4	28 9·5	·080	23 28 40·0
13 12	188 212 2·938	"	30 27	18 382 5·129	"
14 44	3·000	7089·470	31 6·5	·308	6566·430
15 47·5	2·898		31 39·5	·285	
18 55·5	3·169		32 41·5	·282	

Run + 13·8.
I. 3-4; S. 3-4.

Chronometer Slow.
h m s
At 22 11 — 38·7

	B	t	T
h m	in.	°	°
At 22 20	30·17	62·9	61·3
23 35	30·15	62·5	62·7

1889, October 14. GILL.

	Sappho and + 12°·104. (f) (124)			Sappho and + 11°·135. (s) (125)	
h m s	r		h m s	r	
2 51 43	170 231 2·402		3 3 18·5	45 356 3·440	
52 54	·410		4 13	·477	
[53 36]	[Indistinct]	h m s	5 26	·427	h m s
54 26	·455	2 54 47·5	6 14	·470	3 6 32·0
55 57	30 370 5·565	"	7 42·5	155 245 4·600	"
[57 12·5]	[Indistinct]	5609·034	8 59·5	·564	4424·547
58 22·5	·550		10 24·5	·610	
59 16·5	·635		11 11	·660	
	Sappho and + 11°·135. (s) (126)			Sappho and + 12°·104. (f) (127)	
3 12 9·5	155 245 4·571		3 23 26	30 370 5·371	
12 55	·647		24 23·5	·300	
13 44·5	·667	h m s	25 9·5	·380	h m s
14 24	·616	3 14 25·3	25 51	·367	3 26 9·2
15 39	45 356 3·420	"	27 21	170 231 2·679	"
16 38	·370	4424·091	28 36·5	·655	5606·564
17 14·5	·311		29 22	·680	
17 51	·415		30 17	·727	

Run + 15·2.
1st half, I. & S. 2-3.
2nd ,, I. & S. 2.

Chronometer Slow.
h m s
At 3 42 — 39·1

	B	t	T
h m	in.	°	°
At 2 48	30·11	60·8	62·7
3 33	30·10	60·2	59·8

Digitized by Google

Chronometer Time.	Readings of Scale.	Cape Sid. Time. — Distance.
1889, October 15. GILL.		
	Sappho and + 12°·104. (f) (128)	
h m s	r	
2 53 58	170 230 2·262	
54 48	·344	
55 25	·129	h m s
56 14	·255	2 56 44·0
58 14	29 370 5·865	″
59 20	·851	5651·305
3 0 16	·849	
0 49	·824	
	Sappho and + 11°·135. (s) (129)	
h m s	r	
3 5 27	45 355 3·112	
6 50	·175	
9 7	·200	h m s
9 48	·140	3 9 30·8
11 7	154 245 5·040	″
11 56	4·919	4381·204
13 8	·920	
13 55	·977	
	Sappho and + 11°·135. (s) (130)	
3 14 48	154 245 4·930	
15 42	5·007	
16 27	4·905	h m s
17 12	·869	3 17 19·0
18 22	45 355 3·160	″
19 10	·221	4381·434
20 9	·270	
21 54	·076	
	Sappho and + 12°·104. (f) (131)	
3 27 49	29 371 2·091	
28 47	·033	
31 30	1·908	h m s
45 49	·990	3 42 32·1
48 14	170 230 2·061	″
50 55	·225	5652·202
52 50	·225	
59 35	·357	

Chronometer Slow.

h m s
At 4 16 — 39·0

	B	t	T
h m	in.	°	°
At 2 50	29·99	65·0	66·5
4 3	30·00	65·0	65·0

Run + 10·5.
I. 3-4 ; S. 3, except for last 8 pointings, when I. 4, and for considerable intervals absolutely unobservable.
It is very doubtful if the last half of the observations should be used.

Chronometer Time.	Readings of Scale.	Cape Sid. Time. — Distance.
1889, October 18. GILL.		
	Sappho and + 11°·120. (o) (132)	
h m s	r	
22 11 2	130 270 5·543	
12 36	·420	
13 57·5	·326	h m s
15 1·5	·245	22 14 52·1
16 33·5	70 331 2·904	″
17 39·5	3·020	2413·577
18 24	2·970	
19 0	3·042	
	Sappho and + 10°·105. (h) (133)	
h m s	r	
22 25 39·5	59 342 3·020	
28 32·5	2·800	
29 44·5	·660	h m s
30 48	·624	22 31 6·5
33 20·5	141 259 5·567	″
34 11	·600	3293·324
34 56	·678	
36 59·5	·806	
	Sappho and + 10°·105. (h) (134)	
22 37 50·5	141 259 5·810	
39 14·5	·882	
42 19	6·187	h m s
43 2	·103	22 42 37·4
44 16	59 341 5·719	″
45 1	·773	3286·137
46 55·5	·671	
47 39	·500	
	Sappho and + 11°·120. (o) (135)	
22 51 11	69 330 5·242	
52 44	·328	
53 53·5	·498	h m s
54 52	·427	22 54 46·3
56 23	130 270 2·453	″
57 24	·384	2440·841
58 13	·329	
58 48·5	·249	

Chronometer Slow.

h m s
At 22 0 — 39·7

	B	t	T
h m	in.	°	°
At 22 8	30·15	60·6	57·0
23 2	30·16	59·8	57·2

Run + 14·8.
1st half, I. 3 ; S. 3.
2nd ,, I. 2 ; S. 2.

Digitized by Google

Chronometer Time.	Readings of Scale.	Cape Sid. Time. — Distance.	Chronometer Time.	Readings of Scale.	Cape Sid. Time. — Distance.
	1889, October 18. GILL.				
	Sappho and + 11°·106. (e) (136)			Sappho and + 10°·115. (r) (137)	
h m s	r		h m s	r	
2 40 14	156 244 2·962		2 54 17·5	26 373 3·380	
41 31·5	·915		55 13	·471	
42 42·5	·887	h m s	56 1	·450	h m s
43 45	·955	2 43 56·5	56 40	·449	2 57 24·0
45 36·5	43 356 5·029	"	58 52	173 227 4·708	"
46 31	·211	4521·734	3 0 3·5	·590	5867·887
47 26·5	·107		1 17·5	·578	
49 8·5	·260		2 11	·569	
	Sappho and + 10°·115. (r) (138)			Sappho and + 11°·106. (e) (139)	
3 3 33·5	173 227 4·673		3 16 3	43 356 5·262	
4 37·5	·540		17 29	·379	
5 34·5	·568	h m s	18 8	·392	h m s
6 17	·619	3 6 34·3	19 18	·387	3 19 55·5
8 3·5	27 374 3·501	"	21 22	156 244 2·635	"
8 46	·545	5868·414	23 16·5	·706	4523·986
10 0	·535		24 15	·709	
11 5·5	·550		24 56	·688	
	Sappho and + 11°·106. (e) (140)			Sappho and + 10°·115. (r) (141)	
3 32 36	156 244 2·669		3 44 51	26 373 3·775	
33 32	·649		46 6·5	·784	
34 6·5	·646	h m s	49 20·5	·855	h m s
35 17	·707	3 36 7·4	50 33·5	·810	3 50 38·4
37 38	43 356 5·479	"	53 12·5	173 227 4·256	"
39 36	·448	4524·583	54 18	·259	5871·530
40 33	·462		55 5	·278	
41 4·5	·439		57 4·5	·221	

Run + 10·3.
L 1-2; S. 2 for (136) to (139).
L 1; S. 2 for (140) and (141).

Chronometer Slow.
At 4 8 — 40·5

	B	t	T
h m	in.	°	°
At 2 36	30·11	58·5	57·8
3 28	30·10	57·5	54·1
3 59	30·09	57·0	53·1

	1889, October 19. GILL.				
	Sappho and + 11°·120. (o) (142)			Sappho and + 9°·097. (d) (143)	
h m s	r		h m s	r	
22 9 31	141 258 5·231		22 21 26	24 376 4·261	
11 46	4·966		23 10	·108	
12 19	5·143	h m s	24 25	·129	h m s
13 4	4·955	22 13 15·0	26 3	·020	22 26 16·8
14 37	58 342 3·227	"	27 37	176 225 4·238	"
15 52	·287	3339·226	29 33	·311	6073·145
16 35	·381		31 23	·473	
17 44	·493		32 5	·487	

Digitized by Google

Chronometer Time.	Readings of Scale.	Cape Sid. Time. — Distance.

1889, October 19. GILL—*continued.*

Sappho and + 9°·097. (d) (144)

h m s	r		
22 33 5	176 225	4·530	
35 2		·630	
35 50		·811	
36 46		·715	h m s 22 36 53·5
38 14	24 376	3·189	′
39 18		·120	6066·461
40 50		2·990	
41 31		3·081	

Sappho and + 11°·120. (o) (145)

h m s	r		
22 45 43	58 342	5·293	
46 21		·350	
46 53		·488	h m s 22 47 16·6
47 24		·385	′
48 17	142 259	2·486	3362·283
48 54		·578	
49 48		·520	
50 21		·495	

Run + 13·0.
I. 2; S. 2–3.

Chronometer Slow.
h m s
21 49 — 41·0

	B	t	T
	h m	in.	°	°
At	22 5	30·02	62·9	58·8
	22 53	30·04	61·9	57·8

1889, October 21. GILL.

Sappho and + 11°·102. (c) (146)

h m s	r		
2 58 8	145 256	3·656	
58 53		·472	
3 0 21		·760	h m s 3 2 12·2
2 17		·690	′
3 44	55 345	4·337	3592·019
5 57		·465	
6 44		·264	
7 27		·305	

Sappho and + 9°·110. (n) (147)

h m s	r		
3 15 6	33 366	4·745	
15 51		·700	
17 59		·664	h m s 3 19 35·9
18 55		·578	′
22 2	166 234	3·608	5317·858
22 51		·489	
24 36		·589	
25 21		·715	

Sappho and + 9°·110. (n) (148)

3 26 40	166 234	3·716	
27 33		·660	
28 27		·724	h m s 3 29 38·9
29 4		·777	′
30 29	33 366	4·210	5314·626
32 6		·120	
34 1		·220	
34 44		·040	

Sappho and + 11°·102. (c) (149)

3 39 26	55 345	4·255	
40 11		·095	
40 54		·230	h m s 3 42 28·4
42 30		·206	′
43 58	145 256	3·773	3590·590
44 39	144 255	3·791	
46 28		·718	
47 34		·849	

Run + 10·0.
I. 3; S. 3, but images excessively faint.
Furious south-easter blowing. Conditions only equivalent to 4.

Chronometer Slow.
h m s
At 2 45 — 44·2
3 59 — 44·1

	B	t	T
	h m	in.	°	°
At	2 55	30·31	57·5	57·0
	3 50	30·30	57·0	56·3

Digitized by Google

1889, October 23. FINLAY.

Sappho and + 10°·105. (h) (150)

Chronometer Time.	Readings of Scale.	Cape Sid. Time. — Distance.
h m s	r	
22 29 46	117 284 1·816	
32 31	117 283 5·683	
35 4	·588	h m s
42 47	4·960	22 40 8·6
44 36	82 317 3·116	″
46 19	·358	1372·074
47 35	·267	
48 33	·429	

Sappho and + 9°·097. (d) (151)

Chronometer Time.	Readings of Scale.	Cape Sid. Time. — Distance.
h m s	r	
23 17 56	69 331 5·110	
21 48	·057	
25 14	131 270 3·303	h m s
26 19	·283	23 25 32·0
27 29	·484	″
28 42	130 269 3·505	2472·278
30 53	69 331 4·285	
31 58	·325	

Run + 13·1.
I. 3; S. 2–3.
Planet excessively faint. Observations poor.

Chronometer Slow.

h m s	B in.	t °	T °
At 21 47 — 45·3			
11 38 — 45·2			
At 22 25	30·07	67·3	66·3
23 35	30·07	66·5	64·0

1889, October 24. GILL.

Sappho and + 11°·102. (c) (152)

Chronometer Time.	Readings of Scale.	Cape Sid. Time. — Distance.
h m s	r	
3 9 56	157 243 4·250	
11 8	·293	
12 25	·217	h m s
14 10·5	·024	3 13 54·9
15 55·5	43 358 3·936	″
16 58·5	·970	4589·949
17 58	4·140	
18 59	42 357 4·083	

Sappho and + 9°·101. (g) (153)

Chronometer Time.	Readings of Scale.	Cape Sid. Time. — Distance.
h m s	r	
3 26 52·5	61 338 3·693	
28 46	·641	
29 56·5	·545	h m s
31 7	·500	3 31 4·5
32 58·5	138 262 4·694	″
34 17	·769	3061·543
34 58·5	·730	
35 51·5	·767	

Sappho and + 9°·101. (g) (154)

Chronometer Time.	Readings of Scale.	Cape Sid. Time. — Distance.
h m s	r	
13 37 11·5	138 262 4·849	
38 12	·830	
39 10	·958	h m s
40 48	5·010	3 40 15·3
41 57·5	62 339 3·010	″
42 41·5	2·928	3057·295
43 21·5	·888	
44 50·5	·880	

Sappho and + 11°·102. (c) (155)

Chronometer Time.	Readings of Scale.	Cape Sid. Time. — Distance.
h m s	r	
3 50 51·5	42 357 5·059	
52 2	·240	
53 21	·114	
54 27	·143	
56 10·5	157 243 2·695	h m s
56 42·5	·698	3 54 52·3
57 17·5	·842	″
57 59·5	·662	4603·207
58 48·5	·694	
59 44·5	·616	
4 0 35	·532	
1 35·5	·675	

Run 16·3.
I. 2-3; S. 3.
Often very faint.

Chronometer Slow.

h m s	B in	t °	T °
At 2 51 — 46·4			
4 16 — 46·3			
At 3 5	30·13	63·7	60·3
4 5	30·10	63·0	60·3

Digitized by Google

Chronometer Time.	Readings of Scale.	Cape Sid. Time. — Distance.
1889, October 25. GILL.		
	Standard Stars. (156)	
h m s	r	m s
22 1 7	180 220 3·429	22 4 1·4
2 38	·371	"
4 44	19 380 4·760	6442·190
10 46	·817	
	Sappho and + 9°·097. (d) (157)	
h m s	r	
22 15 58	87 313 3·842	
18 17	·791	
19 39	·713	h m s
20 28	·700	22 20 27·0
22 11	112 287 4·430	"
23 25	·471	1018·638
24 37	·559	
25 20	·567	
	Sappho and + 9°·097. (d) (158)	
22 26 58	112 287 4·611	
27 36	·580	
28 6	·663	h m s
29 5	·720	22 29 21·7
30 15	87 313 3·237	"
31 59	·211	1015·050
33 0	·165	
34 14	·132	
	Standard Stars. (160)	
22 39 53	19 380 4·877	h m s
43 2	·899	22 49 33·4
58 13	180 220 3·130	"
23 0 15	·115	6444·084

Run + 17·1.
Standard Stars, I. 2–3 ; S. 3–4.
Planet. I. 2–3 ; S. 2–3.
Images generally very faint. Position Angles measured will be found after the Observations of Distance.

Chronometer Slow.
At 21 49 — 47·4
11 53 — 48·0

	B	t	T
h m	in.	°	°
At 22 0	30·12	68·0	63·2
23 26	30·11	66·0	63·7

1889, October 27. GILL.

Chronometer Time.	Readings of Scale.	Cape Sid. Time. — Distance.
	Sappho and + 10°·105. (h) (163)	
h m s	r	
22 27 18	158 243 4·577	
29 5	·550	
30 52	·470	h m s
32 20	·302	22 32 11·4
34 25	42 358 3·899	"
35 8	·876	4628·247
37 17	·994	
37 59	4·025	
	Sappho and + 8°·110. (a) (164)	
h m s	r	
22 41 44	52 348 5·624	
42 45	·574	
42 54	·490	h m s
43 47	·509	22 44 22·7
46 3	148 253 2·795	"
47 36	·900	3842·536
48 8	·922	
48 57	·847	
	Sappho and + 8°·110. (a) (165)	
22 50 22	148 253 3·033	
51 1	·031	
52 17	·047	
53 20	·210	h m s
54 47	52 348 4·922	22 54 1·7
56 9	·805	"
23 0 19	·597	3837·313
0 31	·571	
	Sappho and + 10°·105. (h) (166)	
23 4 4	42 358 5·485	
5 12	·676	
6 35	·689	
7 25	·793	h m s
9 38	158 243 2·200	23 7 39·7
10 55	·140	"
11 46	·094	4648·928
12 35	1·859	

Run + 12·3.
I. 2–3 ; S. 3.
Observations extremely difficult and often uncertain, because of faintness of planet through haze.

Chronometer Slow.
At 22 9 — 51·6

	B	t	T
h m	in.	°	°
At 22 25	29·97	69·3	63·8
23 15	29·99	66·9	62·6

Digitized by Google

CAPE OBSERVATIONS OF SAPPHO.—POSITION ANGLES.

1889, October 4. GILL.

Sappho and + 14°·163. (x) (78)

Chronometer Time.	Readings of Position Circle.	Cape Sid. Time. — Position Angle.
h m s	° ′ ″	
22 0 38	110 50 50½	
2 6	110 38	
3 52·5	110 9	h m s
4 43	109 49	22 4 26·8
	Reversed Segments.	
5 59	108 7½	Mean 108° 59′ 41″
6 51	107 30	
7 47·5	107 30	Correction for Equatoreal Adjustment — 35′ 43″
8·16	107 25	

Sappho and + 14°·163. (x) (79)

Chronometer Time.	Readings of Position Circle.	Cape Sid. Time. — Position Angle.
h m s	° ′ ″	
22 9 8·5	107 19	
10 57	106 41	h m s
11 48·5	106 29	22 13 5·8
12 43	106 20·5	
	Reversed Segments.	Mean 106° 42′ 58″
14 10·5	107 21	
15 10	106 54	Correction for Equatoreal Adjustment — 35′ 42″
16 10·5	106 44	
19 16·5	105 56 55	
	Reversed Position Circle.	

Sappho and + 14°·163. (x) (80)

Chronometer Time.	Readings of Position Circle.	Cape Sid. Time. — Position Angle.
h m s	° ′ ″	
22 23 36·5	284 51½ 50½	
26 19·5	283 56	h m s
27 44·5	283 37	22 29 9·1
29 3·5	283 14	
	Reversed Segments.	Mean 282° 54′ 4″
30 24·5	282 20	
31 21·5	282 13	Correction for Equatoreal Adjustment — 35′ 42″
33 35	281 45	
35·46	281 19	

Sappho and + 14°·163. (x) (81)

Chronometer Time.	Readings of Position Circle.	Cape Sid. Time. — Position Angle.
h m s	° ′ ″	
22 37 34·5	280 51	
38 28	280 26½	h m
39 40·5	280 23	22 42 10·6
40 45·5	279 59	
	Reversed Segments.	Mean 279° 43′ 49″
42 45·5	280 4	
45 37	279 8	Correction for Equatoreal Adjustment — 35′ 42″
48 19·5	278 42	
48 52·5	278 20 19½	

Standard Stars. (83A)

Chronometer Time.	Readings of Position Circle.	Cape Sid. Time. — Position Angle.
h m s	° ′ ″	
23 19 8·5	239 54 53½	h m s
	Reversed Segments.	23 19 34·2
21 9·5	53 52½	239° 53′ 15″
		Correction for Equatoreal Adjustment — 35′ 39″

I. 1–2; S. 1–2.

Chronometer Slow.

h m s
At 21 27 — 34·8

	h m	B in.	t °	T °
At	21 56	30·25	55·2	54·0
	23 55	30·25	54·8	53·4

1889, October 4. GILL.

Sappho and + 14°·163. (x) (84)

Chronometer Time.	Readings of Position Circle.	Cape Sid. Time. — Position Angle.
h m s	° ′ ″	
3 10 43	67 59 59½	
12 34	67 49	h m s
14 25·5	67 40½	3 16 6·6
16 24·5	67 22	
	Reversed Segments.	Mean 67° 12′ 41″
17 55·5	66 44	
18 59	66 43	Correction for Equatoreal Adjustment — 36′ 25″
20 24·5	66 39	
22 4	66 43	

Sappho and + 14°·163. (x) (85)

Chronometer Time.	Readings of Position Circle.	Cape Sid. Time. — Position Angle.
h m s	° ′ ″	
3 23 19·5	66 33	
24 6	66 28	h m s
24 32	66 31	3 26 2·7
25 17	66 33	
	Reversed Segments.	Mean 66° 39′ 13″
27 11·5	66 50	
28 13	66 46	Correction for Equatoreal Adjustment — 36′ 23″
29 11·5	66 53	
31 8·5	66 37 37½	
	Reversed Position Circle.	

Digitized by Google

Chronometer Time.	Readings of Position Circle.	Cape Sid. Time. — Position Angle.	Chronometer Time.	Readings of Position Circle.	Cape Sid. Time. — Position Angle.
1889, October 4. GILL—*continued.*					
	Sappho and + 14°·163. (x) (86)			Sappho and + 14°·163. (x) (87)	
h m s	° ′ ″		h m s	° ′ ″	
3 34 56	246 14	h m s	3 49 38	245 11	h m s
37 12·5	246 28	3 41 34·2	52 37	245 8½	3 55 11·2
38 50·5	246 12½		53 34	245 3	
41 2	246 2	Mean 245° 53′ 49″	54 30·5	244 57	Mean 245° 10′ 20″
	Reversed Segments.			Reversed Segments.	
3 44 31	245 40	Correction for Equatoreal Adjustment — 36′ 21″	3 55 54	245 40	Correction for Equatoreal Adjustment — 36′ 19″
45 16	245 37		58 14·5	245 14	
46 46·5	245 32		59 8·5	245 3	
48 37	245 23		4 2 31	245 4 4½	
	Standard Stars. (89)				
4 22 31·5	59 51½ 52	h m s			
23 49·5	59 51½ 52	4 25 31·7			
	Reversed Segments.	239° 52′ 15″			
27 16·5	59 52½ 53	Correction for Equatoreal Adjustment — 36′ 12″			
30 48	59 52½ 53				

	Chronometer Slow.		B	t	T
I. 2–3 ; S. 2–3.	h m s	h m	in.	°	°
	At 4 44 — 34·7	At 3 5	30·22	53·6	54·1
		4 35	30·22	53·5	54·2

1889, October 25. GILL.

	Standard Stars. (159)				
h m s				h m s	
22 43 50	239 54 4 31	8 35		22 48 4·4	
47 59	4 31	8 39			
	Reversed Segments.			Mean 259° 54′ 12″	
50 39	4 51	9 8			
52 59	4 47	8 58		Correction for Equatoreal Adjustment — 35′ 41″	

Zero of Position Circle Microscopes, 9′ 59″ ; 5′ 6″.

	Sappho and + 9°·097. (d) (161)			Sappho and + 9°·097. (d) (162)	
	° ′ ″		h m s	° ′ ″	
23 5 54	258 43 43	h m s	23 15 56	258 57 56·5	h m s
8 1	258 46 45·5	23 9 50·4	16 58	56 55	23 18 54·5
8 45	258 48·5 48		17 59	58 57·5	
9 46	258 51 50·5	Mean 258° 48′ 38″	18 47	59 58·5	Mean 259° 1′ 28″
11 41	258 47 46·5		20 21	259 1·5 1	
12 43	258 50·5 50	Correction for Equatoreal Adjustment — 35′ 39″	21 21	4·5 4	Correction for Equatoreal Adjustment — 35′ 39″
13 36	258 52 51		22 6	8 7·5	
14 37	258 53 52·5		24 8	10 9·5	

	Chronometer Slow.		B	t	T
I. 2–3 ; S. 3–4 for Standard Stars.	h m s	h m	in.	°	°
I. 2–3 ; S. 2–3 for other Observations.	At 21 49 — 47·4	At 22 0	30·12	68·0	65·2
		23 26	30·11	66·0	65·7

Digitized by Google

YALE

OBSERVATIONS OF SAPPHO

IN

1889.

Digitized by Google

YALE HELIOMETER OBSERVATIONS OF SAPPHO, 1889.

OBSERVERS: ELKIN AND HALL.

1889, September 19. Obs. HALL.

Star.	Chronometer.	Micrometer.	Means.
°	h m s		h m s
+ 17·166 (ε)	20 41 32	+ 1·538	20 43 51
(1)	43 22	+ 1·617	
	44 48	— 1·190	r 333·443
	45 43	— 1·078	
+ 15·185 (λ)	20 53 42	— 1·076	20 55 48
(2)	55 2	— 1·061	
	56 44	+ 0·570	393·539
	57 45	+ 0·646	
+ 15·185 (λ)	21 1 50	+ 0·731	21 3 59
(3)	3 7	+ 1·480	
	4 49	— 1·043	393·519
	6 11	— 1·129	
+ 17·166 (ε)	21 11 26	— 1·013	21 13 8
(4)	12 27	— 1·102	
	13 51	+ 0·690	333·642
	14 48	+ 0·709	
+ 17·166 (ε)	21 23 13	+ 0·749	21 25 24
(5)	24 10	+ 0·762	
	26 32	— 1·018	333·718
	27 43	— 1·057	
+ 15·185 (λ)	22 19 20	+ 0·640	22 21 17
(6)	20 21	+ 1·369	
	22 8	— 1·332	393·205
	23 21	— 1·268	
+ 15·185 (λ)	22 26 15	— 1·360	22 28 27
(7)	27 28	— 1·293	
	29 28	+ 1·420	393·104
	30 34	+ 1·441	
+ 17·166 (ε)	22 41 39	+ 0·916	22 45 35
(8)	44 52	+ 0·966	
	47 19	— 0·727	334·201
	48 31	— 0·752	
+ 17·166 (ε)	22 51 36	— 0·706	22 53 34
(9)	52 29	— 0·758	
	54 32	+ 0·951	334·189
	55 39	+ 0·892	

1889, September 19. Obs. HALL—*continued.*

Star.	Chronometer.	Micrometer.	Means.
°	h m s		h m s
+ 15·185 (λ)	23 8 18	+ 1·217	23 10 17
(10)	9 29	+ 1·265	
	11 13	— 1·514	r 392·780
	12 8	— 1·408	

At Beginning, Thermometer 49°·0.
„ End „ 48°·0. Barometer 751·5 mm.
Chronometer Correction, — 38ˢ. I. 3. S. 3.
Observations interrupted by haze.

1889, September 21. Obs. HALL.

Star.	Chronometer.	Micrometer.	Means.
°	h m s		h m s
+ 16·119 (γ)	22 13 2	— 1·562	22 14 49
(11)	14 15	— 1·636	
	15 34	+ 1·059	r 338·520
	16 27	+ 1·179	
+ 15·185 (λ)	22 28 5	+ 1·180	22 29 50
(12)	29 9	+ 1·096	
	30 33	— 1·572	382·536
	31 33	— 1·631	
+ 15·185 (λ)	22 34 53	— 1·676	22 37 8
(13)	36 0	— 1·514	
	37 58	+ 1·218	382·580
	39 25	+ 1·132	
+ 16·119 (γ)	22 45 42	+ 0·892	22 47 55
(14)	47 7	+ 0·928	
	48 52	— 0·876	338·032
	49 58	— 0·880	
+ 16·119 (γ)	22 52 30	— 0·891	22 34 34
(15)	53 47	— 0·851	
	55 35	+ 0·900	338·005
	56 26	+ 0·853	
+ 15·185 (λ)	23 3 5	+ 1·184	23 4 59
(16)	3 58	+ 1·168	
	5 28	— 1·423	382·758
	7 25	— 1·412	

Digitized by Google

1889, September 21. Obs. HALL—*continued.*

Star.	Chronometer.	Micrometer.	Means.
°	h m s		h m s
+ 15·185 (λ)	23 10 8	− 1·481	23 13 29
(17)	12 4	− 1·551	
	15 9	+ 1·213	r 382·727
	16 34	+ 1·274	
+ 16·119 (γ)	23 38 6	+ 1·492	23 39 48
(18)	38 54	+ 1·621	
	40 22	− 1·177	337·372
	41 51	− 1·191	
+ 16·119 (γ)	23 53 58	− 1·260	23 55 41
(19)	54 50	− 1·271	
	56 20	+ 1·396	337·156
	57 35	+ 1·448	
+ 15·185 (λ)	0 1 27	+ 1·381	0 3 3
(20)	2 21	+ 1·308	
	3 46	− 1·397	382·937
	4 37	− 1·418	
+ 15·185 (λ)	0 8 14	− 1·417	0 10 6
(21)	9 23	− 1·410	
	10 57	+ 1·360	382·992
	11 51	+ 1·451	
+ 16·119 (γ)	0 15 4	+ 1·349	0 17 10
(22)	16 8	+ 1·326	
	18 12	− 1·359	336·933
	19 16	− 1·450	

At Beginning, Thermometer 50°·0.
„ End „ 45°·5. Barometer 752·5 mm.
Chronometer Correction, — 33ˢ. I. 2. S. 3
Observations interrupted by clouds.

1889, September 22. Obs. ELKIN.

Star.	Chronometer.	Micrometer.	Means.
°	h m s		h m s
+ 16·119 (γ)	20 27 28	+ 1·184	20 29 8
(23)	28 28	+ 1·051	
	29 57	− 1·455	r 324·706
	30 40	− 1·368	
+ 15·185 (λ)	20 33 21	− 0·763	20 34 35
(24)	34 11	− 0·814	
	35 2	+ 0·687	387·958
	35 46	+ 0·807	

1889, September 22. Obs. ELKIN—*continued.*

Star.	Chronometer.	Micrometer.	Means.
°	h m s		h m s
+ 15·185 (λ)	20 39 21	+ 0·792	20 40 41
(25)	39 55	+ 0·763	
	41 9	− 0·808	r 387·997
	42 19	− 0·753	
+ 16·119 (γ)	20 44 43	− 1·411	20 45 46
(26)	45 12	− 1·395	
	46 12	+ 1·140	324·723
	46 57	+ 1·112	
+ 16·119 (γ)	20 48 48	+ 1·128	20 50 27
(27)	49 50	+ 1·118	
	51 4	− 1·401	324·677
	52 6	− 1·490	
+ 15·185 (λ)	20 54 51	− 1·651	20 56 27
(28)	55 58	− 1·731	
	56 55	+ 1·006	388·316
	58 6	+ 1·008	
+ 15·185 (λ)	21 0 16	+ 0·950	21 1 27
(29)	0 45	+ 0·890	
	2 8	− 0·733	388·253
	2 41	− 0·600	
+ 16·119 (γ)	21 4 56	− 1·567	21 6 4
(30)	5 23	− 1·400	
	6 43	+ 1·086	324·603
	7 14	+ 1·087	
+ 16·119 (γ)	21 9 15	+ 1·027	21 10 41
(31)	9 59	+ 1·128	
	11 19	− 1·440	324·565
	12 10	− 1·585	
+ 15·185 (λ)	21 14 37	− 1·560	21 16 10
(32)	15 19	− 1·589	
	16 59	+ 1·008	388·499
	17 45	+ 1·140	
+ 15·185 (λ)	21 19 16	+ 1·080	21 20 31
(33)	19 56	+ 1·028	
	21 7	− 1·533	388·548
	21 47	− 1·479	
+ 16·119 (γ)	21 24 17	− 1·621	21 25 25
(34)	24 51	− 1·482	
	25 59	+ 1·000	324·478
	26 33	+ 1·060	

At Beginning, Thermometer 46°·0.
„ End „ 43°·0. Barometer 760·5 mm.
Chronometer Correction, — 31ˢ. I. 3. S. 3.

Digitized by Google

1889, September 22. Obs. HALL.

Star.	Chronometer.	Micrometer.	Means.
°	h m s		h m s
+ 16·129 (κ)	4 46 17	− 1·631	4 48 33
(35)	47 35	− 1·560	
	49 40	+ 1·102	r 312·514
	50 42	+ 1·118	
+ 16·123 (ζ)	4 57 48	+ 1·331	4 59 56
(36)	59 9	+ 1·348	
	5 0 48	− 1·388	110·880
	2 1	− 1·530	
+ 16·123 (ζ)	5 6 4	− 1·494	5 8 14
(37)	7 12	− 1·520	
	8 59	+ 0·993	110·569
	10 41	+ 1·040	

At Beginning, Thermometer 40°·0.
„ End „ 40·5. Barometer 761·0 mm.
Chronometer Correction, — 30ˢ. I. 3. S. 3.

1889, September 23. Obs. HALL.

Star.	Chronometer.	Micrometer.	Means.
°	h m s		h m s
+ 15·177 (ι)	21 11 56	− 0·968	21 13 23
(38)	12 44	− 1·045	
	13 58	+ 0·813	r 261·864
	14 56	+ 0·928	
+ 16·119 (γ)	21 19 54	+ 0·777	21 21 27
(39)	20 37	+ 0·773	
	22 5	− 0·959	319·794
	23 13	− 1·002	
+ 16·119 (γ)	21 26 21	− 0·872	21 28 3
(40)	27 29	− 0·888	
	28 44	+ 0·878	319·978
	29 40	+ 0·839	
+ 15·177 (ι)	21 36 36	+ 0·700	21 39 14
(41)	37 49	+ 0·733	
	40 44	− 1·143	261·586
	41 49	− 1·118	
+ 15·177 (ι)	21 44 34	− 1·140	21 46 53
(42)	45 41	− 1·130	
	47 38	+ 1·654	261·518
	49 38	+ 1·653	

1889, September 23. Obs. HALL—*continued.*

Star.	Chronometer.	Micrometer.	Means.
°	h m s		h m s
+ 16·119 (γ)	21 55 24	+ 0·847	21 57 28
(43)	56 31	+ 0·821	
	58 26	− 0·843	r 319·987
	59 30	− 0·850	
+ 16·119 (γ)	22 2 36	− 0·871	22 4 3
(44)	3 18	− 0·856	
	4 33	+ 0·872	320·006
	5 45	+ 0·868	
+ 15·177 (ι)	22 12 37	+ 1·604	22 14 43
(45)	13 45	+ 1·540	
	15 37	− 1·239	261·343
	16 52	− 1·218	

At Beginning, Thermometer 53°·0.
„ End „ 48·5. Barometer 763·0 mm.
Chronometer Correction, — 28ˢ. I. 2–3. S. 2–3.

1889, September 23. Obs. ELKIN.

Star.	Chronometer.	Micrometer.	Means.
°	h m s		h m s
+ 16·129 (κ)	5 2 42	+ 0·808	5 3 51
(46)	3 18	+ 0·909	
	4 16	− 0·722	r 370·111
	5 7	− 0·772	
+ 16·129 (κ)	5 7 1	− 0·729	5 8 14
(47)	7 41	− 0·667	
	8 44	+ 0·953	370·249
	9 29	+ 0·941	
+ 15·164 (α)	5 12 24	+ 0·781	5 13 39
(48)	12 55	+ 0·637	
	14 6	− 1·027	387·696
	15 10	− 0·998	

At Beginning, Thermometer 44°·5.
„ End „ 45·5. Barometer 763·0 mm.
Chronometer Correction, — 28ˢ. I. 3. S. 2–3.
An observation previous to these was not of 15°·164.
Stars faint by haze and at last dawn.

Digitized by Google

1889, September 26. Obs. HALL.

Star.	Chronometer.	Micrometer.	Means.
°	h m s		h m s
+ 15·175 (θ)	4 23 4	+ 0·667	4 27 28
	24 29	+ 0·700	
(49)	29 39	— 0·822	r 223·852
	32 41	— 0·841	
+ 15·164 (α)	4 40 23	— 0·989	4 42 27
	41 19	— 0·898	
(50)	43 23	+ 0·886	201·906
	44 43	+ 0·814	
+ 15·164 (α)	4 48 8	+ 0·778	4 49 35
	48 49	+ 0·710	
(51)	50 6	— 1·230	201·544
	51 17	— 1·169	
+ 15·175 (θ)	4 55 27	— 1·235	4 57 34
	56 25	— 1·288	
(52)	58 26	+ 1·469	225·214
	5 0 0	+ 1·483	
+ 15·175 (θ)	5 2 39	+ 0·628	5 4 53
	3 55	+ 0·780	
(53)	5 58	— 1·089	225·600
	7 0	— 1·118	
+ 15·164 (α)	5 11 20	— 0·657	5 13 27
	12 50	— 0·670	
(54)	14 12	+ 1·059	200·350
	15 25	+ 0·968	
+ 15·164 (α)	5 19 14	+ 0·922	5 21 22
	20 28	+ 0·858	
(55)	22 13	— 0·848	199·975
	23 33	— 0·982	
+ 15·175 (θ)	5 26 49	— 0·746	5 28 56
	28 19	— 0·642	
(56)	29 42	+ 1·156	226·478
	30 54	+ 1·188	

At Beginning, Thermometer 47°·5.
„ End „ 45·5. Barometer 759·5 mm.
Chronometer Correction, — 27ˢ·. I. 3. S. 3.

1889, September 27. Obs. HALL.

Star.	Chronometer.	Micrometer.	Means.
°	h m s		h m s
+ 16·119 (γ)	20 39 30	+ 1·400	20 41 29
	40 48	+ 1·444	
(57)	42 24	— 1·311	r 406·102
	43 16	— 1·329	
+ 13·175 (η)	20 47 55	— 1·402	20 50 5
	49 8	— 1·533	
(58)	50 51	+ 1·308	454·866
	52 25	+ 1·359	
+ 13·175 (η)	20 54 55	+ 1·367	20 56 36
	55 49	+ 1·232	
(59)	57 12	— 1·417	454·852
	58 28	— 1·458	
+ 16·119 (γ)	21 1 44	— 1·081	21 3 27
	2 47	— 1·013	
(60)	4 11	+ 0·919	407·782
	5 8	+ 0·740	
+ 16·119 (γ)	21 8 5	+ 0·847	21 9 54
	9 14	+ 0·842	
(61)	10 37	— 0·920	407·958
	11 42	— 0·854	
+ 13·175 (η)	21 15 13	— 0·642	21 17 5
	16 14	— 0·688	
(62)	17 36	+ 0·992	454·332
	19 17	+ 1·002	
+ 13·175 (η)	21 22 11	+ 0·958	21 23 36
	22 52	+ 1·007	
(63)	24 17	— 0·842	454·143
	25 6	— 0·836	
+ 16·119 (γ)	21 28 16	— 0·590	21 29 48
	29 7	— 0·643	
(64)	30 21	+ 1·158	408·558
	31 27	+ 1·192	
+ 16·119 (γ)	21 35 35	+ 1·210	21 37 26
	36 29	+ 1·269	
(65)	38 7	— 1·538	408·717
	39 33	— 1·507	
+ 13·175 (η)	21 42 59	— 1·021	21 44 40
	43 56	— 1·056	
(66)	45 21	+ 0·730	453·691
	46 25	+ 0·729	

Digitized by Google

1889, September 27. Obs. HALL—*continued.*

Star.	Chronometer.	Micrometer.	Means.
°	h m s		h m s
+ 13·175 (η)	21 48 36	+ 0·680	21 50 14
(67)	49 14	+ 0·610	r
	51 1	− 1·067	453·556
	52 6	− 1·110	
+ 16·119 (γ)	21 55 31	− 1·280	21 57 5
(68)	56 25	− 1·215	
	57 40	+ 1·468	409·261
	58 46	+ 1·549	

At Beginning, Thermometer 46°·0.
„ End „ 43·5. Barometer 762·5 mm.
Chronometer Correction, − 26ˢ. I. — S. —

1889, September 27. Obs. ELKIN.

Star.	Chronometer.	Micrometer.	Means.
°	h m s		h m s
+ 15·164 (α)	4 12 32	+ 1·550	4 13 50
(69)	13 33	+ 1·454	r
	14 19	− 1·179	137·347
	14 58	− 1·130	
+ 16·123 (ζ)	4 18 18	− 1·102	4 19 37
(70)	18 58	− 1·008	
	20 14	+ 1·608	203·557
	20 59	+ 1·616	
+ 16·123 (ζ)	4 22 48	+ 0·626	4 24 5
(71)	23 48	+ 0·749	
	24 29	− 0·880	203·803
	25 15	− 0·889	
+ 15·164 (α)	4 28 10	− 1·450	4 31 51
(72)	28 55	− 1·562	
	34 48	+ 0·873	136·443
	35 32	+ 1·026	
+ 15·164 (α)	4 37 12	+ 0·894	4 38 22
(73)	37 46	+ 0·927	
	38 49	− 0·732	136·177
	39 43	− 0·734	
+ 16·123 (ζ)	4 42 2	− 1·539	4 43 31
(74)	42 57	− 1·418	
	44 20	+ 1·180	204·708
	44 47	+ 1·194	

1889, September 27. Obs. ELKIN—*continued.*

Star.	Chronometer.	Micrometer.	Means.
°	h m s		h m s
+ 16·123 (ζ)	4 46 32	+ 1·242	4 47 35
(75)	47 11	+ 1·306	r
	48 2	− 1·302	204·927
	48 35	− 1·392	
+ 15·164 (α)	4 51 57	− 1·019	4 52 56
(76)	52 31	− 1·119	
	53 17	+ 1·417	135·389
	53 59	+ 1·500	
+ 15·164 (α)	4 55 59	+ 1·467	4 56 57
(77)	56 35	+ 1·381	
	57 22	− 1·278	135·221
	57 51	− 1·127	
+ 16·123 (ζ)	5 0 24	− 1·070	5 1 20
(78)	0 51	− 0·990	
	1 45	+ 0·618	205·608
	2 20	+ 0·659	
+ 16·123 (ζ)	5 4 12	+ 0·588	5 5 59
(79)	5 39	+ 0·701	
	6 25	− 0·810	205·814
	7 39	− 0·851	
+ 15·164 (α)	5 10 24	− 1·432	5 11 28
(80)	11 0	− 1·510	
	11 49	+ 0·974	134·526
	12 39	+ 1·020	

At Beginning, Thermometer 42°·5.
„ End „ 42·5. Barometer 763·0 mm.
Chronometer Correction, − 24ˢ. I. 3. S. 3.

1889, September 28. Obs. ELKIN.

Star.	Chronometer.	Micrometer.	Means.
°	h m s		h m s
+ 15·159 (z)	20 44 33	+ 0·727	20 46 50
(81)	46 23	+ 0·750	r
	47 33	− 0·856	187·820
	48 53	− 0·980	
+ 14·175 (δ)	20 51 46	− 0·825	21 0 21
(82)	52 18	− 0·840	
	21 7 51	+ 0·763	139·959
	9 31	+ 0·820	

Digitized by Google

1889, September 28. Obs. ELKIN—*continued.*

Star.	Chronometer.	Micrometer.	Means.
°	h m s		h m s
+ 14·175 (δ)	21 11 55	+ 0·837	21 12 49
(83)	12 29	+ 0·785	r
	13 10	− 0·940	139·914
	13 41	− 0·854	
+ 15·159 (z)	21 17 2	− 1·241	21 18 6
(84)	17 40	− 1·090	
	18 28	+ 1·533	187·352
	19 14	+ 1·502	
+ 15·159 (z)	21 20 35	+ 1·467	21 22 5
(85)	21 15	+ 1·494	
	22 17	− 1·112	187·249
	24 14	− 1·351	
+ 14·175 (δ)	21 30 27	− 0·918	21 31 35
(86)	31 9	− 0·941	
	31 47	+ 0·630	139·772
	32 57	+ 0·774	
+ 14·175 (δ)	21 35 56	+ 0·737	21 37 20
(87)	37 14	+ 0·677	
	37 53	− 0·978	139·756
	38 18	− 0·924	
+ 15·159 (z)	21 40 7	− 1·365	21 40 57
(88)	40 40	− 1·269	
	41 18	+ 1·348	187·017
	41 45	+ 1·321	
+ 15·159 (z)	21 43 29	+ 1·260	21 44 44
(89)	44 32	+ 1·457	
	45 11	− 1·290	187·019
	45 45	− 1·388	
+ 14·175 (δ)	21 48 11	− 0·922	21 49 7
(90)	48 48	− 0·990	
	49 29	+ 0·622	139·709
	50 1	+ 0·708	

At Beginning, Thermometer 52°·0.
„ End „ 47°·5. Barometer 763·5 mm.
Chronometer Correction, — 23ˢ. I. 2–3. S. 3.
Stars faint at beginning.

1889, September 28. Obs. HALL.

Star.	Chronometer.	Micrometer.	Means.
°	h m s		h m s
+ 14·168 (y*)	4 0 9	− 1·363	4 2 59
(91)	1 54	− 1·296	r
	4 8	+ 1·247	352·953
	5 44	+ 1·318	
+ 16·123 (ζ)	4 21 29	+ 1·422	4 23 49
(92)	22 52	+ 1·522	
	24 37	− 1·180	271·296
	26 18	− 1·172	
+ 16·123 (ζ)	4 30 20	− 1·058	4 32 45
(93)	31 45	− 1·066	
	33 55	+ 0·717	271·670
	34 59	+ 0·748	
+ 14·168 (y*)	4 39 5	+ 1·389	4 41 2
(94)	39 59	+ 1·389	
	41 40	− 1·347	350·997
	43 24	− 1·437	
+ 14·168 (y*)	4 45 34	− 1·490	4 48 13
(95)	47 39	− 1·493	
	49 17	+ 1·118	350·628
	50 22	+ 1·121	
+ 16·123 (ζ)	4 58 29	+ 1·288	5 0 24
(96)	59 26	+ 1·299	
	5 1 14	− 1·361	272·962
	2 26	− 1·302	
+ 16·123 (ζ)	5 5 7	− 1·218	5 7 21
(97)	6 25	− 1·269	
	8 18	+ 1·572	273·353
	9 33	+ 1·622	
+ 14·168 (y*)	5 14 22	+ 1·475	5 6 43
(98)	15 31	+ 1·472	
	17 54	− 1·289	349·158
	19 4	− 1·341	
+ 14·168 (y*)	5 22 11	− 1·435	5 24 9
(99)	23 11	− 1·447	
	24 52	+ 1·241	348·761
	26 22	+ 1·163	
+ 16·123 (ζ)	5 30 4	+ 1·020	5 31 52
(100)	31 3	+ 1·101	
	32 41	− 1·623	274·433
	33 39	− 1·632	

At Beginning, Thermometer 44°·0.
„ End „ 43°·0. Barometer 765·0 mm.
Chronometer Correction, — 21ˢ. I. 2–3. S. 2–3.

Digitized by Google

1889, October 1. Obs. ELKIN.

Star.	Chronometer.	Micrometer.	Means.
°	h m s		h m s
+ 15·164 (*a*)	3 47 38	+ 1·161	3 49 35
(101)	49 10	+ 1·245	r
	50 10	− 1·274	142·896
	51 22	− 1·340	
+ 14·168 (y*)	3 54 33	− 1·305	3 58 20
(102)	58 20	− 1·418	
	59 32	+ 1·058	144·728
	4 0 54	+ 1·122	
+ 14·168 (y*)	4 4 22	+ 1·100	4 5 42
(103)	5 16	+ 0·986	
	6 3	− 0·612	144·425
	7 9	− 0·624	
+ 15·164 (*a*)	4 9 43	− 0·864	4 11 36
(104)	10 56	− 0·791	
	12 15	+ 0·861	144·021
	13 31	+ 0·837	
+ 15·164 (*a*)	4 15 20	+ 0·908	4 16 50
(105)	16 15	+ 0·977	
	17 12	− 0·589	144·337
	18 33	− 0·622	
+ 14·168 (y*)	4 21 6	− 0·980	4 22 30
(106)	21 55	− 1·016	
	22 34	+ 1·572	143·594
	24 27	+ 1·614	
+ 14·168 (y*)	4 26 52	+ 1·512	4 28 22
(107)	27 47	+ 1·451	
	28 41	− 1·176	143·300
	30 9	− 1·186	
+ 15·164 (*a*)	4 32 19	− 1·308	4 33 26
(108)	33 1	− 1·200	
	33 55	+ 1·400	145·137
	34 29	+ 1·383	
+ 15·164 (*a*)	4 35 51	+ 1·402	4 37 5
(109)	36 41	+ 1·482	
	37 18	− 1·080	145·317
	38 29	− 1·170	
+ 14·168 (y*)	4 40 43	− 1·498	4 43 7
(110)	42 37	− 1·514	
	44 9	+ 1·024	142·504
	44 59	+ 0·996	

At Beginning, Thermometer 53°·5.
„ End „ 51°·5. Barometer 752·5 mm.
Chronometer Correction, − 19ˢ. I. 3. S. 3.

1889, October 2. Obs. ELKIN.

Star.	Chronometer.	Micrometer.	Means.
°	h m s		h m s
+ 15·154 (*u*)	20 44 45	− 1·052	20 46 23
(111)	45 53	− 1·137	r
	47 9	+ 1·538	319·474
	47 45	+ 1·600	
+ 13·175 (η)	20 50 12	+ 1·070	20 51 31
(112)	51 2	+ 1·140	
	52 3	− 1·468	388·619
	52 48	− 1·504	
+ 13·175 (η)	20 54 58	− 1·486	20 56 42
(113)	56 4	− 1·384	
	57 37	+ 1·187	388·712
	58 10	+ 1·108	
+ 15·154 (*u*)	21 0 41	+ 0·642	21 2 16
(114)	1 31	+ 0·600	
	2 56	− 1·003	319·637
	3 58	− 0·964	
+ 15·154 (*u*)	21 5 15	− 0·979	21 6 24
(115)	6 7	− 1·042	
	6 53	+ 0·560	319·584
	7 20	+ 0·630	
+ 13·175 (η)	21 9 23	+ 1·248	21 10 56
(116)	10 31	+ 1·337	
	11 33	− 1·278	388·980
	12 18	− 1·346	
+ 13·175 (η)	21 14 32	− 1·278	21 16 33
(117)	16 8	− 1·208	
	17 24	+ 1·331	389·064
	18 9	+ 1·284	
+ 15·154 (*u*)	21 20 42	+ 0·714	21 21 59
(118)	21 14	+ 0·678	
	22 8	− 0·948	319·792
	23 51	− 0·860	
+ 15·154 (*u*)	21 26 13	− 0·938	21 27 25
(119)	26 45	− 0·954	
	28 4	+ 0·682	319·756
	28 38	+ 0·722	
+ 13·175 (η)	21 30 9	+ 1·429	21 31 20
(120)	31 1	+ 1·508	
	31 46	− 1·167	389·305
	32 24	− 1·160	

Digitized by Google

1889, October 2. Obs. ELKIN—*continued*.

Star.	Chronometer.	Micrometer.	Means.
°	h m s		h m s
+ 13·175 (η)	21 33 29	— 1·107	21 35 53
	34 56	— 1·137	
(121)	36 44	+ 1·538	r
	38 22	+ 1·527	389·410
+ 15·154 (υ)	21 40 53	+ 0·754	21 42 24
	41 22	+ 0·683	
(122)	43 18	— 0·875	319·843
	44 5	— 0·875	

At Beginning, Thermometer 47°·0.
„ End „ 46°·0. Barometer 761·0 mm.
Chronometer Correction, — 17ˢ. I. 3-4. S. 3.

1889, October 2. Obs. HALL, T. E.

Star.	Chronometer.	Micrometer.	Means.
°	h m s		h m s
+ 15·164 (α)	4 13 31	— 1·363	4 15 41
	14 45	— 1·309	
(123)	16 37	+ 1·452	r
	17 51	+ 1·463	217·121
+ 14·163 (x̄)	4 23 36	+ 1·570	4 25 21
	24 39	+ 1·678	
(124)	26 11	— 1·162	105·422
	26 59	— 1·242	
+ 14·163 (x)	4 30 5	— 1·324	4 31 58
	31 12	— 1·341	
(125)	32 49	+ 1·360	105·032
	33 48	+ 1·370	
+ 15·164 (α)	4 36 55	+ 0·857	4 38 51
	37 55	+ 0·992	
(126)	39 30	— 0·689	218·270
	41 6	— 0·620	
+ 15·164 (α)	4 43 9	— 1·566	4 44 56
	44 15	— 1·561	
(127)	45 41	+ 1·187	218·669
	46 38	+ 1·278	
+ 14·163 (x)	4 51 10	+ 0·839	4 53 22
	52 34	+ 0·862	
(128)	54 7	— 0·896	103·894
	55 36	— 1·017	

1889, October 2. Obs. HALL, T. E.—*continued*.

Star.	Chronometer.	Micrometer.	Means.
°	h m s		h m s
+ 14·163 (x)	4 58 29	— 1·048	5 0 35
	59 44	— 1·081	
(129)	5 1 26	+ 1·667	r
	2 41	+ 1·569	103·553
+ 15·164 (α)	5 7 12	+ 0·717	5 9 13
	8 26	+ 0·801	
(130)	9 59	— 0·990	219·827
	11 16	— 0·873	
+ 15·164 (α)	5 13 34	— 0·799	5 15 40
	14 48	— 0·768	
(131)	16 32	+ 1·019	220·199
	17 48	+ 0·947	
+ 14·163 (x)	5 21 26	+ 1·107	5 24 25
	22 19	+ 1·063	
(132)	26 5	— 0·805	102·226
	27 49	— 0·913	
+ 14·163 (x)	5 31 25	— 0·899	5 33 10
	32 39	— 0·920	
(133)	33 47	+ 0·733	101·833
	34 50	+ 0·753	

At Beginning, Thermometer 38°·0.
„ End „ 36°·5. Barometer 762·5 mm.
Chronometer Correction, — 17ˢ. I. —. S. —.

1889, October 3. Obs. HALL, T. W.

Star.	Chronometer.	Micrometer.	Means.
	h m s	′ ″ ′ ″	h m s
Standards.	20 33 24	— 0·659	20 37 14
	34 20	9 4 2 30	r
(135s)		3 14 4 49	508·399
(136p)	38 51	2 5 1 41	20 36 35
		6 58 5 3	329 19 19
	41 4	+ 1·058	
°		′ ′	
+ 14·163 (x)	20 47 20	8·9	20 50 36
	48 49	50 51	55·743
(137s)	49 53	+ 0·740	
(138p)	51 20	— 0·997	20 50 44
	52 22	43·45	300 50 34
	54 25	38·39	

Digitized by Google

1889, October 3. Obs. HALL, T. W.—*continued.*

Star.	Chronometer.	Micrometer.	Means.
°	h m s	′ ″	h m s
+ 14·168 (y*)	20 58 49	40 40	21 12 52
(139s)	21 1 1	41 41·	r 41·957
(140p)	12 36	− 0·840	
	13 9	+ 0·797	21 7 11
	14 6	57· 57·	239 24 34
	14 48	19 20	
+ 14·168 (y*)	21 19 18	43 45	21 21 48
(141s)	20 29	36· 37·	41·984
(142p)	21 17	+ 0·874	
	22 19	− 0·890	21 25 40
	30 44	53 55	58 11 34
	32 11	31 31·	
+ 14·163 (x)	21 39 3	17 17·	21 42 50
(143s)	40 33	21· 22	53·018
(144p)	41 23	− 1·362	
	44 17	+ 1·380	21 53 56
	22 5 33	22· 23	120 17 0
	10 36	6 6·	
+ 14·163 (x)	22 13 40	10 10	22 18 4
(145s)	16 28	54 55	51·204
(146p)	17 17	+ 1·523	
	18 52	− 1·319	22 17 57
	20 6	43 43	119 52 38
	21 31	43 43	

At Beginning, Thermometer 52°0.
„ End „ 52·5. Barometer 761·0 mm.
Chronometer Correction, − 15s. I. —. S. —.
Observations interrupted and stopped by clouds.

1889, October 3. Obs. ELKIN, T. E.

Star.	Chronometer.	Micrometer.	Means.
°	h m s	′ ″	h m s
+ 14·163 (x)	3 49 48	− 0·765	3 54 8
(147s)	51 21	− 0·778	
(148p)	52 35	21· 22	r 33·879
	54 18	24· 25·	
	55 23	24 25	3 54 43
	56 37	18· 19	
	57 19	+ ·637	113 22 30
	58 5	+ ·664	

1889, October 3. Obs. ELKIN, T. E.—*continued.*

Star.	Chronometer.	Micrometer.	Means.
°	h m s	′ ″	h m s
+ 14·168 (y*)	4 1 13	+ 1·445	4 5 26
(149s)	2 18	+ 1·455	r
(150p)	3 15	32· 34·	41·324
	4 31	29 30	
	6 4	20 20·	4 5 11
	6 56	16 17·	
	8 42	− 1·120	28 25 0
	9 31	− 1·131	
+ 14·168 (y*)	4 12 2	− 1·101	4 15 57
(151s)	13 9	− 1·060	
(152p)	14 25	41· 42	41·488
	15 20	41 41·	
	16 32	41 41·	4 15 59
	17 38	31· 32	
	18 41	+ 1·511	207 39 0
	19 56	+ 1·627	
+ 14·163 (x)	4 22 51	+ 1·059	4 26 53
(153s)	24 0	+ 0·990	
(154p)	25 11	37 38	32·261
	26 4	23 25	
	27 16	24 26	4 26 43
	28 23	26· 28	
	29 54	− 0·730	292 28 26
	30 49	− 0·797	
		′ ″ ′ ″	
Standards.	4 35 32	+ 0·873	4 38 0
(155s)	36 11	2 13 3 49	508·083
(156p)		4 46 5 23	
	89 12	9 0· 3 56	4 37 41
		1 40 5 26	329 17 16
	40 29	− 0·790	
Standards.	4 42 50	− 0·810	4 45 2
(157s)	43 41	0 42· 3 51	508·006
(158p)		2 0 5 24	
	45 55	2 7 3 54	4 44 48
		3 28 5 21	49 17 27
	47 15	+ 0·816	

At Beginning, Thermometer 50°5.
„ End „ 50·5. Barometer 761·0 mm.
Chronometer Correction, − 13s. I. 2–3. S. 2–3.

Digitized by Google

1889, October 4. Obs. ELKIN, T. W.

Star.	Chronometer.	Micrometer.	Means.
°	h m s	′ ″	h m s
+ 14·163 (x)	21 1 40	— 0·722	21 5 43
	2 28	43 44	
(159s)		r	
	3 45	— 0·679	22·343
(160p)	4 42	20 21	
	5 59	30· 32	21 5 38
	7 7	+ 1·018	
	9 25	46 47·	333 35 30
	10 20	+ 1·070	
+ 14·163 (x)	21 12 0	+ 1·216	21 15 11
	12 55	6 6·	
(161s)	13 29	+ 1·186	22·860
(162p)	14 24	18 18·	
	15 25	35 35·	21 15 0
	16 27	— 1·343	
	17 15	58· 59	153 14 37
	18 49	— 1·339	
+ 14·163 (x)	21 21 47	— 1·275	21 25 4
	22 21	1· 2·	
(163s)	23 12	— 1·206	23·306
(164p)	24 23	26 28	
	25 33	38 39	21 25 1
	26 37	r	
	27 47	48 49	332 44 0
	28 40	+ 1·586	
		′ ″ ′ ″	
Standards.	21 33 12	+ 0·978	21 35 48
(165s)	33 48	3 13· 3 16	508·366
(166p)		6 17 5 2	
	35 54	0 15· 2 42	21 34 51
		3 51 5 3	329 19 23
	38 24	— 1·612	
Standards.	21 40 18	— 1·636	21 42 30
(167s)	41 0	1 29· 2 27	508·358
(168p)		4 3 4 20	
	43 6	1 57 2 32	21 42 3
		4 24 4 58	329 19 24
	44 42	+ 0·994	
		′ ″	
+ 14·163 (x)	21 48 2	+ 1·108	21 52 1
	48 53	28· 29	
(169s)	50 12	+ 1·104	24·711
(170p)	51 33	45 45·	
	53 1	25· 26	21 52 8
	53 48	— 1·372	
	55 7	8 8·	151 27 0
	56 4	— 1·417	

1889, October 4. Obs. ELKIN, T. W.—*continued.*

Star.	Chronometer.	Micrometer.	Means.
°	h m s	′ ″	h m s
+ 14·163 (x)	21 58 23	— 1·320	22 1 57
	59 16	30 31·	
(171s)	22 0 24	r	r
		— 1·236	25·177
(172p)	1 31	57 58	
	2 54	2 3	22 2 1
	3 33	+ 1·416	
	4 25	7 8·	331 9 37
	5 30	+ 1·493	

At Beginning, Thermometer 49°·0.
„ End „ 44·5. Barometer 765·0 mm.
Chronometer Correction, — 10s. I. 3–4. S. 3–4.

1889, October 4. Obs. HALL, T. E.

Star.	Chronometer.	Micrometer.	Means.
°	h m s	′ ″	h m s
+ 14·163 (x)	3 57 44	+ 0·701	4 3 21
	59 3	59· 61	
(173s)	4 0 36	r	r
		+ 0·793	43·986
(174p)	1 38	48· 49	
	4 42	39· 41·	4 3 15
	6 3	— 0·771	
	7 37	21 22·	322 42 48
	9 1	— 0·751	
+ 14·163 (x)	4 11 56	— 0·649	4 18 0
	13 30	28 28	
(175s)	15 18	— 0·508	44·800
(176p)	16 33	10 10	
	20 13	34 34	4 18 12
	21 15	+ 1·367	
	22 31	38 38	142 27 30
	23 33	+ 1·391	
+ 14·163 (x)	4 27 11	+ 1·487	4 32 56
	28 33	+ 1·611	45·605
(177s)	29 21	29· 30·	
(178p)	30 31	+ 1·552	4 32 38
(179s)	32 9	+ 1·660	322 15 30
(180p)	33 39	11· 13	
	35 55	0 2	4 36 21
	37 34	— 0·987	45·721
	38 28	— 0·901	
	39 30	1· 3	4 36 34
	40 47	— 0·857	322 7 15
	41 59	— 0·912	

Digitized by Google

1889, October 4. Obs. HALL, T. E.—*continued.*

Star.	Chronometer.	Micrometer.	Means.
°	h m s	′ ″	h m s
+ 14·163 (x)	4 45 1	− 0·793	4 51 9
	46 26	− 0·701	r 46·495
(181s)	48 1	48 47·	
	49 21	− 0·654	4 50 52
(182p)	50 15	− 0·640	141 57 52
(183s)	51 25	46· 46	
(184p)	53 44	8 8	4 54 48
	55 56	+ 1·199	46·750
	57 13	+ 1·285	
	58 3	10· 11	4 54 44
	59 14	+ 1·357	141 58 30
	5 0·24	+ 1·438	
		′ ″ ′ ″	
Standards.	5 4 42	+ 0·788	5 9 17
	6 12	7 44 7 17	507·847
(185s)		5 37· 5 10	
(186p)	9 58	3 29 7 26	5 8 5
		1 16· 5 11	149 18 16
	13 52	− 0·941	
Standards.	5 16 1	− 0·888	5 20 31
	17 18	2 23· 7 22	507·891
(187s)		1 25· 4 51	
(188p)	21 24	6 1· 7 18	5 19 21
		5 3· 5 3	329 17 35
	25 2	+ 0·779	
		′ ″	
+ 14·163 (x)	5 30 44	+ 1·161	5 36 37
	31 44	+ 1·182	48·898
(189s)	33 2	34 36	
(190p)	34 16	+ 1·334	5 36 23
(191s)	36 21	+ 1·328	321 23 30
(192p)	37 46	30· 32·	
	39 45	11 13	5 40 51
	41 27	− 1·284	49·166
	42 35	− 1·262	
	44 36	8· 9·	5 41 11
	45 55	− 1·138	321 20 15
	46 51	− 1·191	

At Beginning, Thermometer 38°·5.
„ End „ 37°·5. Barometer 763·5 mm.
Chronometer Correction, — 8s. I. — S. —

1889, October 5. Obs. HALL, T. W.

Star.	Chronometer.	Micrometer.	Means.
°	h m s	′ ″	h m s
+ 14·163 (x)	20 40 37	+ 1·452	20 43 56
	41 41	19· 19	r 95·364
(193s)	43 17	22 22	
(194p)	45 4	13 13	20 44 7
	46 28	10 10	135 16 4
	47 16	− 1·088	
+ 13·150 (t)	20 52 18	− 0·758	20 54 51
	53 27	51 51	166·113
(195s)	54 39	52 52	
(196p)	55 53	56 56	20 55 10
	56 41	52· 52·	128 52 52
	57 25	+ 0·871	
+ 13·150 (t)	20 59 15	+ 0·826	21 2 2
	21 0 42	56· 57·	165·838
(197s)	1 27	54 56	
(198p)	2 54	50 51·	21 2 12
	3 47	48· 49	308 52 52
	4 49	− 0·988	
+ 14·163 (x)	21 7 23	− 1·418	21 10 6
	8 24	7 8	96·920
(199s)	9 40	8 8·	
(200p)	11 1	18 19	21 10 18
	12 11	18 19	315 13 11
	12 49	+ 1·338	
+ 14·163 (x)	21 13 59	+ 1·352	21 17 38
	16 29	17 18	97·215
(201s)	17 31	15 16	
(202p)	19 10	6· 7·	21 18 22
	20 18	6 7	315 11 37
	21 17	− 1·137	
+ 13·150 (t)	21 24 48	− 1·547	21 29 1
	25 46	49 50	164·364
(203s)	30 6	44 46	
(204p)	31 19	51 52	21 29 55
	32 32	56· 57·	308 50 45
	33 15	+ 0·911	
+ 13·150 (t)	21 34 57	+ 0·972	21 38 42
	36 15	50· 51	163·980
(205s)	38 6	51· 52	
(206p)	39 0	47 47·	21 38 33
	40 52	45· 46	128 48 52
	42 27	− 0·992	

Digitized by Google

1889, October 5. Obs. HALL, T. W.—*continued.*

Star.	Chronometer.	Micrometer.	Means.
°	h m s	′ ″	h m s
+ 14·163 (x)	21 46 28	— 1·496	21 49 4
(207s)	47 46	1· 1·	r 98·886
(208p)	48 46	2· 2·	
	49 50	10 10	21 49 16
	50 43	11· 12	135 6 26
	51 40	+ 1·382	
+ 14·163 (x)	21 53 2	+ 1·469	21 56 52
(209s)	54 26	10 10·	99·309
(210p)	55 43	10· 10·	
	57 13	1· 1·	21 56 40
	59 18	2· 2·	135 6 11
	22 0 43	— 1·160	

At Beginning, Thermometer 49°·5.
„ End „ 46·5. Barometer 762·0 mm.
Chronometer Correction, — 5s. I. 2–3. S. 2–3.
Observations stopped by clouds.

1889, October 7. Obs. HALL, T. W.

Star.	Chronometer.	Micrometer.	Means.
°	h m s	′ ″	h m s
+ 13·150 (t)	22 49 47	48· 49	22 56 15
(211s)	52 38	53 54	r 6·789
(212p)	53 54	+ 1·347	
	55 15	30 30·	22 55 42
(213s)	56 13	6· 7	115 59 57
(214p)	57 26	+ 1·057	
	58 37	— 1·558	22 59 18
	59 46	20 20·	6·487
	23 0 40	57 57·	
	1 11	— 1·570	22 59 43
	2 49	3 3·	114 25 0
	4 36	59· 60	
+ 13·150 (t)	23 7 2	29 29·	23 10 0
(215s)	8 36	27· 28·	6·001
(216p)	9 25	— 0·881	
	10 35	+ 0·882	23 10 11
	12 5	58 58·	291 58 41
	13 3	59 59·	
+ 13·150 (t)	23 14 3	7· 8·	23 16 13
(217s)	15 15	16 17	5·704
(218p)	15 48	+ 1·672	
	16 39	— 0·968	23 16 41
	17 36	0 0·	290 16 30
	19 51	41 41·	

1889, October 7. Obs. HALL, T. W.—*continued.*

Star.	Chronometer.	Micrometer.	Means.
°	h m s	′ ″	h m s
+ 13·150 (t)	23 22 50	8· 9·	23 24 43
(219s)	23 44	9· 9·	r 5·350
(220p)	24 25	— 1·203	
	25 1	+ 1·553	23 24 53
	25 52	53 54	289 24 41
	27 6	26· 27	

At Beginning, Thermometer 40°·5.
„ End „ 38·5. Barometer 758·0 mm.
Chronometer Correction, — 2s. I. — . S. —

1889, October 7. Obs. ELKIN, T. E.

Star.	Chronometer.	Micrometer.	Means.
°	h m s	′ ″	h m s
+ 13·150 (t)	3 38 40	+ 1·150	3 41 0
(221s)		30 30	
(221p)	40 28	+ 1·198	r 9·490
		34 35	
	41 36	— 1·440	322 15 37
		4 5	
	43 18	— 1·418	
		53 54	
+ 13·150 (t)	3 45 38	— 1·326	3 47 29
(222s)		14 16	
(222p)	46 59	— 1·320	9·894
		51 51	
	48 0	+ 1·240	141 26 45
		28 29	
	49 18	+ 1·300	
		12 13	
+ 13·150 (t)	3 50 23	+ 1·283	3 52 16
(223s)		4 5	
(224p)	51 37	+ 1·368	10·052
		51 52	
	52 51	— 1·241	3 51 37
		50 50	
	54 12	— 1·358	141 55 20
+ 13·150 (t)	3 56 52	— 1·178	3 58 41
(225s)		2 3	
(225p)	58 9	— 1·200	10·369
		8 9	
	59 16	+ 1·310	320 50 45
		17 18	
	4 0 29	+ 1·437	
		54 55	

Digitized by Google

1889, October 7. Obs. ELKIN, T. E.—*continued.*

Star.	Chronometer.	Micrometer.	Means.
°	h m s	′ ″	h m s
+ 13·150 (t)	4 1 38	+ 1·422	4 3 34
		42 43	
(226s)			r
	3 5	+ 1·527	10·660
(226p)		55 56	
	4 11	— 1·123	321 18 15
		4 5	
	5 22	— 1·166	
		30 31	
+ 13·150 (t)	4 7 47	— 1·009	4 11 21
		27 28	
(227s)			
	9 3	— 0·962	11·147
(227p)		24 25	
	13 3	+ 1·517	141 7 30
		30 31	
	15 32	+ 1·601	
		7 8	

At Beginning, Thermometer 37°·5.
„ End „ 37·5. Barometer, 758·5 mm.
Chronometer Correction, — 2ˢ. I. 2–3. S. 2–3.
Stars faint, moonlight.

1889, October 8. Obs. ELKIN, T. W.

Star.	Chronometer.	Micrometer.	Means.
	h m s	′ ″ ′ ″	h m s
Standards.	20 53 42	+ 0·982	20 56 9
		4 13 4 27	
(228s)	54 36		r
		4 58· 4 58	508·314
(229p)	56 48	3 2· 4 20	20 55 42
		3 58 4 33	
	58 36	— 1·668	149 19 28
Standards.	21 7 18	— 1·592	21 9 54
		1 32· 3 20	
(230s)	8 6		
		4 28· 4 50	508·416
(231p)	10 6	3 2 2 50	21 9 6
		6 32· 5 1	
	12 30	+ 1·008	329 19 54

At Beginning, Thermometer 39°·0.
„ End „ Barometer 760·0 mm.
Chronometer Correction, 0.
Planet too faint for accurate observation, moonlight.

1889, October 10. Obs. ELKIN, T. W.

Star.	Chronometer.	Micrometer.	Means.
°	h m s		h m s
+ 13·130 (m)	20 52 29	+ 0·954	20 54 6
	53 29	+ 0·915	
(232)			r
	54 40	— 1·684	414·331
	55 48	— 1·522	
+ 12·126 (v)	20 59 6	— 1·287	21 0 57
	21 0 32	— 1·228	
(233)			
	1 33	+ 1·385	245·095
	2 39	+ 1·321	
+ 12·126 (v)	21 4 38	+ 1·298	21 6 49
	5 31	+ 1·320	
(234)			
	7 0	— 1·310	245·004
	10 6	— 1·300	
+ 13·130 (m)	21 12 43	— 1·455	21 14 43
	14 6	— 1·548	
(235)			
	15 32	+ 1·038	414·589
	16 33	+ 1·144	
+ 13·130 (m)	21 20 40	+ 1·122	21 22 37
	22 5	+ 1·090	
(236)			
	23 30	— 1·520	414·625
	24 15	— 1·442	
+ 12·126 (v)	21 26 50	— 1·285	21 28 43
	28 13	— 1·290	
(237)			
	29 8	+ 1·344	245·013
	30 41	+ 1·258	
+ 12·126 (v)	21 32 43	+ 1·288	21 34 3
	33 30	+ 1·297	
(238)			
	34 43	— 1·288	244·985
	35 18	— 1·326	
+ 13·130 (m)	21 37 16	— 1·319	21 38 19
	37 45	— 1·409	
(239)			
	38 49	+ 1·152	414·829
	39 27	+ 1·234	

At Beginning, Thermometer 43°·0.
„ End „ 43·0. Barometer 764·5 mm.
Chronometer Correction, 0. I. 2–3. S. 3.
Stars faint.

Digitized by Google

1889, October 10. Obs. HALL, T. E.

Star.	Chronometer.	Micrometer.	Means.
° ′	h m s		h m s
+ 14·163 (x)	3 55 19	− 1·505	3 58 4
(240)	56 39	− 1·470	
	59 32	+ 1·204	r 504·714
	4 0 47	+ 1·199	
+ 11·118 (l)	4 21 22	+ 1·218	4 23 19
(241)	22 25	+ 1·153	
	24 4	− 1·573	362·539
	25 24	− 1·719	
+ 11·118 (l)	4 30 28	− 0·772	4 33 42
(242)	32 39	− 0·867	
	35 7	+ 0·790	361·973
	36 36	+ 0·795	
+ 14·163 (x)	4 45 37	+ 1·340	4 50 2
(243)	48 41	+ 1·529	
	52 21	− 1·098	507·332
	53 29	− 1·107	

At Beginning, Thermometer 37°·0.
„ End „ 37°·5. Barometer 759·5 mm.
Chronometer Correction, + 2s. I. 2. S. 2.
Stopped by clouds. Stars previously very faint. Moon and haze.

1889, October 15. Obs. HALL, T. W.

Star.	Chronometer.	Micrometer.	Means.
°	h m s		h m s
− 12·104 (f)	20 53 38	− 1·330	20 55 44
(244)	54 44	− 1·359	
	56 41	+ 1·346	r 446·975
	57 54	+ 1·293	
− 11·135 (s)	21 9 44	+ 0·922	21 12 20
(245)	10 20	+ 0·959	
	13 55	− 1·579	344·316
	15 23	− 1·670	
+ − 1·135 (s)	21 19 4	− 1·612	21 21 22
(246)	19 57	− 1·653	
	22 8	+ 1·081	344·448
	24 21	+ 1·081	
+ 1 ═ ·104 (f)	21 30 20	+ 1·507	21 32 51
(247)	31 11	+ 1·507	
	34 17	− 1·130	447·371
	35 36	− 1·141	

1889, October 15. Obs. HALL, T. W.—*continued.*

Star.	Chronometer.	Micrometer.	Means.
°	h m s		h m s
+ 12·104 (f)	21 39 29	− 1·084	21 41 37
(248)	40 38	− 1·127	
	42 41	+ 1·582	r 447·469
	43 40	+ 1·568	
+ 11·135 (s)	21 48 34	+ 1·137	21 50 36
(249)	49 50	+ 1·098	
	51 20	− 1·572	344·557
	52 42	− 1·548	
+ 11·135 (s)	21 56 32	− 1·507	21 59 3
(250)	57 44	− 1·546	
	22 0 5	+ 1·212	344·691
	1 52	+ 1·224	
+ 12·104 (f)	22 6 45	+ 1·668	22 8 44
(251)	8 0	+ 1·683	
	9 27	− 1·008	446·655
	10 45	− 1·032	

At Beginning, Thermometer 51°·5.
„ End „ 50°·5. Barometer 759·5 mm.
Chronometer Correction, + 3s. I. 3. S. 3.

1889, October 15. Obs. ELKIN, T. E.

Star.	Chronometer.	Micrometer.	Means.
°	h m s		h m s
+ 12·126 (v)	3 45 32	− 1·053	3 47 2
(252)	46 17	− 0·940	
	47 43	+ 1·595	r 451·604
	48 36	+ 1·607	
+ 11·102 (c)	3 51 44	+ 1·261	3 53 6
(253)	52 13	+ 1·140	
	53 44	− 1·437	506·797
	54 44	− 1·370	
+ 11·102 (c)	3 56 48	− 1·446	3 58 35
(254)	58 12	− 1·547	
	59 19	+ 0·990	506·500
	4 0 1	+ 1·003	
+ 12·126 (v)	4 3 23	+ 0·911	4 4 57
(255)	4 1	+ 1·015	
	5 14	− 1·477	452·448
	7 12	− 1·552	

Digitized by Google

1889, October 15. Obs. ELKIN, T. E.—*continued.*

Star.	Chronometer.	Micrometer.	Means.
°	h m s		h m s
+ 12·126 (v)	4 10 46	− 1·470	4 12 15
(256)	11 34	− 1·435	r
	13 1	+ 1·190	452·727
	13 39	+ 1·170	
+ 11·102 (c)	4 16 28	+ 1·676	4 17 54
(257)	17 5	+ 1·550	
	18 36	− 1·176	505·518
	19 28	− 1·014	
+ 11·102 (c)	4 23 22	− 1·088	4 24 44
(258)	24 6	− 1·184	
	25 11	+ 1·299	505·188
	26 16	+ 1·350	
+ 12·126 (v)	4 30 37	+ 1·556	4 32 0
(259)	31 10	+ 1·571	
	32 40	− 0·940	453·587
	33 32	− 1·012	

At Beginning, Thermometer 42°·5.
„ End „ 42·5. Barometer 760·5 mm.
Chronometer Correction, + 4s. I. 2–3. S. 2–3.

1889, October 16. Obs. ELKIN, T. W.

Star.	Chronometer.	Micrometer.	Means.
°	h m s		h m s
+ 12·104 (f)	20 42 18	+ 1·464	20 44 24
(260)	43 54	+ 1·606	
	45 19	− 0·998	r
	46 4	− 1·043	463·514
+ 10·115 (r)	20 48 40	− 1·570	20 50 13
(261)	49 36	− 0·722	
	50 58	+ 0·864	464·273
	51 38	+ 0·975	
+ 10·115 (r)	20 53 52	+ 0·929	20 55 22
(262)	54 49	+ 0·861	
	55 58	− 0·701	464·221
	56 48	− 0·647	
+ 12·104 (f)	20 59 55	− 0·876	21 1 32
(263)	21 0 56	− 0·828	
	2 19	+ 0·710	463·877
	2 59	+ 0·749	

1889, October 16. Obs. ELKIN, T. W.—*continued.*

Star.	Chronometer.	Micrometer.	Means.
c	h m s		h m s
+ 12·104 (f)	21 5 12	+ 0·748	21 6 34
(264)	5 50	+ 0·748	
	7 7	− 0·843	r
	8 6	− 0·785	463·934
+ 10·115 (r)	21 11 9	− 0·687	21 12 39
(265)	11 44	− 0·752	
	13 12	+ 0·785	464·121
	14 33	+ 0·897	
+ 10·115 (r)	21 18 10	+ 0·908	21 19 42
(266)	18 53	+ 0·846	
	20 31	− 0·773	464·144
	21 16	− 0·692	
+ 12·104 (f)	21 23 25	− 0·680	21 24 49
(267)	24 12	− 0·557	
	25 21	+ 0·890	464·312
	26 18	+ 0·972	

At Beginning, Thermometer 45°·5.
„ End „ 44·0. Barometer 764·0 mm.
Chronometer Correction, + 6s. I. 3. S. 3.

1889, October 16. Obs. HALL, T. E.

Star.	Chronometer.	Micrometer.	Means.
°	h m s		h m s
+ 12·126 (v)	3 44 21	+ 1·008	3 47 50
(268)	46 20	+ 0·972	
	49 16	− 1·514	r
	51 24	− 1·468	516·499
+ 11·102 (c)	3 58 44	− 1·537	4 1 54
(269)	4 0 25	− 1·601	
	3 12	+ 0·953	444·376
	5 17	+ 0·938	
+ 11·102 (c)	4 9 31	+ 0·802	4 12 25
(270)	10 53	+ 0·777	
	13 26	− 0·941	443·838
	15 49	− 0·962	
+ 12·126 (v)	4 22 22	− 0·820	4 24 58
(271)	23 53	− 0·790	
	26 3	+ 0·947	518·157
	27 36	+ 0·977	

Digitized by Google

1889, October 16. Obs. HALL, T. E.—*continued.*

Star.	Chronometer.	Micrometer.	Means.
°	h m s		h m s
+ 12·126 (v)	4 32 10	+ 1·045	4 35 1
(272)	34 5	+ 1·078	
	35 58	− 1·566	r 518·548
	37 51	− 1·460	
+ 11·102 (c)	4 43 21	− 1·639	4 47 9
(273)	45 23	− 1·621	
	48 26	+ 0·907	442·229
	51 28	+ 0·812	
+ 11·102 (c)	4 55 18	+ 0·729	4 57 46
(274)	57 9	+ 0·758	
	58 37	− 1·013	441·739
	59 59	− 0·996	
+ 12·126 (v)	5 4 57	− 0·932	5 7 0
(275)	5 53	− 0·941	
	7 35	+ 0·844	519·924
	9 35	+ 0·878	

At Beginning, Thermometer 33°5.
„ End „ 33°0. Barometer 762·5 mm.
Chronometer Correction, + 8ˢ·. I. 3. S. 3.

1889, October 17. Obs. HALL, T. W.

Star.	Chronometer.	Micrometer.	Means.
°	h m s		h m s
+ 11·106 (e)	20 44 59	+ 1·553	20 46 59
(276)	46 5	+ 1·451	
	47 52	− 1·144	r 353·396
	49 1	− 1·068	
+ 10·115 (r)	20 54 31	− 1·211	20 56 36
(277)	55 56	− 1·211	
	57 29	+ 1·333	457·186
	58 30	+ 1·462	
+ 10·115 (r)	21 1 13	+ 1·412	21 3 19
(278)	1 59	+ 1·391	
	4 36	− 1·248	457·167
	5 30	− 1·221	
+ 11·106 (e)	21 13 22	− 1·197	21 15 34
(279)	14 30	− 1·157	
	16 30	+ 1·551	353·356
	17 53	+ 1·515	
+ 11·106 (e)	21 23 57	+ 1·543	21 25 50
(280)	24 51	+ 1·546	
	26 46	− 1·170	353·418
	27 45	− 1·083	

1889, October 17. Obs. HALL, T. W.—*continued.*

Star.	Chronometer.	Micrometer.	Means.
°	h m s		h m s
+ 10·115 (r)	21 31 37	− 1·161	21 33 30
(281)	33 0	− 1·171	
	34 12	+ 1·456	r 457·288
	35 11	+ 1·452	
+ 10·115 (r)	21 37 53	+ 1·577	21 39 39
(282)	38 35	+ 1·521	
	40 22	− 1·129	457·394
	41 46	− 1·180	
+ 11·106 (e)	21 47 17	− 1·208	21 49 23
(283)	48 0	− 1·220	
	50 17	+ 1·531	353·334
	51 59	+ 1·518	

At Beginning, Thermometer 44°5.
„ End „ 44°0. Barometer 760·5 mm.
Chronometer Correction, + 11ˢ. I. 2-3. S. 2-3.

1889, October 18. Obs. ELKIN, T. W.

Star.	Chronometer.	Micrometer.	Means.
°	h m s		h m s
+ 11·106 (e)	20 50 40	− 0·890	20 52 55
(284)	51 53	− 0·833	
	54 0	+ 0·787	r 357·872
	55 8	+ 0·680	
+ 10·115 (r)	20 58 16	+ 0·564	20 59 46
(285)	59 12	+ 0·536	
	21 0 22	− 1·084	461·496
	1 15	− 1·024	
+ 10·115 (r)	21 3 12	− 0·989	21 4 45
(286)	4 11	− 1·084	
	5 24	+ 0·530	461·533
	6 15	+ 0·609	
+ 11·106 (e)	21 9 17	+ 0·860	21 11 13
(287)	10 17	+ 0·880	
	11 56	− 0·743	358·102
	13 21	− 0·792	
+ 11·106 (e)	21 16 4	− 0·769	21 18 38
(288)	18 7	− 0·770	
	19 44	+ 0·949	358·152
	20 39	+ 0·895	
+ 10·115 (r)	21 24 8	+ 0·657	21 26 12
(289)	25 41	+ 0·752	
	27 10	− 0·823	461·844
	27 51	− 0·898	

Digitized by Google

1889, October 18. Obs. ELKIN, T. W.—*continued.*

Star.	Chronometer.	Micrometer.	Means.
°	h m s		h m s
+ 10·115 (r)	21 30 8	− 0·842	21 31 58
(290)	31 15	− 0·832	
	32 56	+ 0·736	r 461·889
	33 34	+ 0·723	
+ 11·106 (e)	21 37 13	+ 0·947	21 39 3
(291)	38 39	+ 0·983	
	39 49	− 0·665	358·367
	40 31	− 0·530	

At Beginning, Thermometer 48°·0.
„ End „ 47·5. Barometer 763·0 mm.
Chronometer Correction, + 11s. I. 2–3. S. 3.

1889, October 18. Obs. HALL, T. E.

Star.	Chronometer.	Micrometer.	Means.
°	h m		h m s
+ 11·120 (o)	3 49 46	+ 1·505	3 51 53
(292)	50 39	+ 1·572	
	53 5	− 1·099	r 227·485
	54 2	− 1·008	
+ 10·105 (h)	3 58 51	− 1·159	4 1 9
(293)	4 0 14	− 1·168	
	2 6	+ 1·440	223·247
	3 27	+ 1·381	
+ 10·105 (h)	4 7 3	+ 1·254	4 9 34
(294)	9 5	+ 1·268	
	10 33	− 1·480	222·757
	11 35	− 1·528	
+ 11·120 (o)	4 16 57	− 1·469	4 18 57
(295)	18 6	− 1·463	
	19 57	+ 1·260	228·815
	20 48	+ 1·302	
+ 11·120 (o)	4 24 6	+ 1·357	4 25 36
(296)	25 12	+ 1·502	
	26 14	− 1·217	229·197
	26 54	− 1·248	
+ 10·105 (h)	4 32 49	− 1·015	4 34 33
(297)	34 1	− 1·060	
	35 9	+ 1·466	221·485
	36 14	+ 1·580	
+ 10·105 (h)	4 40 35	+ 1·387	4 42 24
(298)	41 45	+ 1·429	
	43 15	− 1·341	221·063
	44 1	− 1·349	

1889, October 18. Obs. HALL, T. E.—*continued.*

Star.	Chronometer.	Micrometer.	Means.
°	h m s		h m s
+ 11·120 (o)	4 48 28	− 0·749	4 50 43
(299)	49 31	− 0·710	
	51 51	+ 1·099	r 230·386
	53 4	+ 1·133	
+ 11·120 (o)	5 0 32	+ 1·268	5 1 42
(300)	1 15	+ 1·312	
	2 15	− 1·326	230·965
	2 48	− 1·324	
+ 10·105 (h)	5 6 37	− 0·880	5 8 47
(301)	8 18	− 1·052	
	9 39	+ 1·666	219·677
	10 35	+ 1·620	
+ 10·105 (h)	5 13 11	+ 1·473	5 14 42
(302)	14 9	+ 1·520	
	15 19	− 1·231	219·257
	16 9	− 1·248	
+ 11·120 (o)	5 19 50	− 0·988	5 21 20
(303)	20 40	− 0·893	
	22 1	+ 0·770	231·827
	22 48	+ 0·767	

At Beginning, Thermometer —°.
„ End „ 35·5. Barometer 764·0 mm.
Chronometer Correction, + 12s. I. 2–3. S. 2.

1889, October 19. Obs. ELKIN, T. E.

Star.	Chronometer.	Micrometer.	Means.
°	h m s		h m s
+ 11·120 (o)	3 31 58	+ 1·442	3 33 48
(304)	33 9	+ 1·347	
	34 25	− 1·190	r 299·292
	35 41	− 1·015	
+ 9·097 (d)	3 39 45	− 1·199	3 41 2
(305)	40 25	− 1·090	
	41 35	+ 1·512	443·285
	42 24	+ 1·348	
+ 9·097 (d)	3 44 15	+ 1·333	3 45 44
(306)	45 13	+ 1·396	
	46 16	− 1·242	443·064
	47 12	− 1·359	

Digitized by Google

1889, October 19. Obs. ELKIN, T. E.—*continued.*

Star.	Chronometer.	Micrometer.	Means.
°	h m s		h m s
+ 11·120 (o)	3 50 23	− 0·640	3 51 44
	51 1	− 0·758	
(307)	52 1	+ 0·892	r 300·218
	53 32	+ 0·942	
+ 11·120 (o)	3 58 30	+ 1·173	3 59 59
	59 23	+ 0·960	
(308)	4 0 38	− 1·532	300·625
	1 26	− 1·350	

At Beginning, Thermometer —.°
„ End „ 51·5. Barometer 761·0 mm.
Chronometer Correction, + 12s. I. 2–3. S. 2–3.
Stars very faint, and finally stopped by fog.

1889, October 21. Obs. HALL, T. W.

Star.	Chronometer.	Micrometer.	Means.
°	h m s		h m s
+ 11·102 (c)	22 27 32	+ 1·238	22 39 18
	28 46	+ 1·278	
(309)	30 1	− 1·448	r 284·782
	30 53	− 1·503	
+ 9·110 (n)	22 35 4	− 1·496	22 37 7
	36 1	− 1·449	
(310)	38 7	+ 1·118	416·682
	39 17	+ 1·192	
+ 9·110 (n)	22 41 42	+ 1·119	22 42 56
	42 21	+ 1·060	
(311)	43 29	− 1·528	416·555
	44 13	− 1·541	
+ 11·102 (c)	22 48 28	− 1·414	22 50 44
	50 15	− 1·431	
(312)	51 32	+ 1·236	284·809
	52 41	+ 1·228	
+ 11·102 (c)	22 55 40	+ 1·250	22 56 56
	56 21	+ 1·312	
(313)	57 25	− 1·458	284·817
	58 18	− 1·469	
+ 9·110 (n)	23 1 40	− 0·764	23 8 15
	2 26	− 0·816	
(314)	3 57	+ 0·952	416·130
	4 59	+ 0·889	
+ 9·110 (n)	23 7 27	+ 0·988	23 9 6
	8 22	+ 0·857	
(315)	9 47	− 0·772	416·142
	10 50	− 0·788	

1889, October 21. Obs. HALL, T. W.—*continued.*

Star.	Chronometer.	Micrometer.	Means.
°	h m s		h m s
+ 11·102 (c)	23 14 6	− 1·421	23 15 39
	15 5	− 1·433	
(316)	16 8	+ 1·240	r 284·823
	17 16	+ 1·260	

At Beginning, Thermometer 40°·5.
„ End „ 39·0. Barometer 766·0 mm.
Chronometer Correction, + 14s. I. 2–3. S. 2–3.

1889, October 21. Obs. ELKIN, T. E.

Star.	Chronometer.	Micrometer.	Means.
°	h m s		h m s
+ 11·120 (o)	3 18 55	− 0·940	3 20 24
	19 49	− 0·958	
(317)	21 0	+ 1·649	r 441·664
	21 54	+ 1·577	
+ 9·097 (d)	3 24 42	+ 1·432	3 25 52
	25 20	+ 1·370	
(318)	26 23	− 1·250	301·176
	27 3	− 1·200	
+ 9·097 (d)	3 28 48	− 1·314	3 29 48
	29 25	− 1·335	
(319)	30 16	+ 1·209	300·933
	30 43	+ 1·308	
+ 11·120 (o)	3 32 45	+ 0·870	3 33 51
	33 25	+ 0·907	
(320)	34 19	− 1·583	442·260
	34 54	− 1·674	
+ 11·120 (o)	3 37 43	− 1·600	3 38 53
	38 14	− 1·521	
(321)	39 19	+ 1·050	442·517
	40 16	+ 1·105	
+ 9·097 (d)	3 42 29	+ 0·996	3 43 34
	43 3	+ 0·958	
(322)	44 6	− 1·670	300·361
	44 39	− 1·562	
+ 9·097 (d)	3 46 4	− 1·681	3 47 16
	46 45	− 1·723	
(323)	47 40	+ 0·824	300·153
	48 36	+ 0·886	

Digitized by Google

1889, October 21. Obs. ELKIN, T. E.—*continued.*

Star.	Chronometer.	Micrometer.	Means.
°	h m s		h m s
+ 11·120 (o)	3 50 41	+ 1·350	3 51 57
	51 26	+ 1·347	
(324)	52 28	— 1·117	r 443·173
	53 12	— 1·483*	

At Beginning, Thermometer 32°·5.
„ End „ 31°·0. Barometer 767·0 mm.
Chronometer Correction, + 13s. I. 3. S. 3.
* Wrong wire used; corrected by + 0·250.

1889, October 23. Obs. HALL, T. W.

Star.	Chronometer.	Micrometer.	Means.
°	h m s		h m s
+ 11·102 (c)	21 10 10	+ 1·076	21 12 3
	11 10	+ 1·110	
(325)	12 56	— 1·518	r 324·537
	13 57	— 1·594	
+ 9·110 (n)	21 19 7	— 1·161	21 20 46
	20 16	— 1·197	
(326)	21 15	+ 1·406	377·223
	22 28	+ 1·398	
+ 9·110 (n)	21 32 21	+ 1·394	21 35 27
	33 3	+ 1·438	
(327)	36 54	— 1·232	377·158
	39 31	— 1·283	
+ 11·102 (c)	21 43 41	— 1·234	21 45 37
	44 42	— 1·222	
(328)	46 10	+ 1·399	324·218
	47 54	+ 1·493	
+ 11·102 (c)	21 50 33	+ 1·662	21 52 21
	51 26	+ 1·611	
(329)	53 17	— 1·141	325·502
	54 10	— 1·128	
+ 9·110 (n)	22 0 20	— 1·223	22 2 11
	1 16	— 1·322	
(330)	3 15	+ 1·590	377·184
	3 52	+ 1·324	
+ 9·110 (n)	22 6 26	+ 1·452	22 8 51
	8 21	+ 1·380	
(331)	9 55	— 1·292	377·131
	10 41	— 1·277	

1889, October 23. Obs. HALL, T. W.—*continued.*

Star.	Chronometer.	Micrometer.	Means.
°	h m s		h m s
+ 11·102 (c)	22 14 36	— 0·863	22 16 24
	15 30	— 0·892	
(332)	17 20	+ 0·816	r 325·974
	18 12	+ 0·889	

At Beginning, Thermometer 35°·5.
„ End „ 32°·5. Barometer 769·0 mm.
Chronometer Correction, + 16s. I. 3. S. 3.

1889, October 23. Obs. ELKIN, T. E.

Star.	Chronometer.	Micrometer.	Means.
°	h m s		h m s
+ 10·105 (h)	3 3 34	+ 1·687	3 5 6
	4 20	+ 1·618	
(333)	5 43	— 1·718	r 137·899
	6 48	— 0·788	
+ 9·097 (d)	3 9 32	— 1·214	3 10 55
	10 24	— 1·188	
(334)	11 34	+ 1·378	167·137
	12 10	+ 1·298	
+ 9·097 (d)	3 15 44	+ 1·182	3 16 40
	16 20	+ 1·290	
(335)	17 1	— 1·351	166·859
	17 37	— 1·403	
+ 10·105 (h)	3 19 39	— 1·516	3 20 56
	20 26	— 1·617	
(336)	21 19	+ 1·038	138·508
	22 22	+ 1·112	
+ 10·105 (h)	3 24 21	+ 1·157	3 25 44
	25 8	+ 1·087	
(337)	26 9	— 1·472	138·701
	27 20	— 1·370	
+ 9·097 (d)	3 30 24	— 0·710	3 32 6
	31 19	— 0·645	
(338)	33 4	+ 0·864	166·139
	33 38	+ 0·770	
+ 9·097 (d)	3 37 17	+ 0·720	3 38 39
	38 1	+ 0·797	
(339)	39 15	— 0·803	165·859
	40 2	— 0·995	
+ 10·105 (h)	3 41 53	— 1·078	3 43 7
	42 36	— 1·061	
(340)	43 16	+ 1·561	139·551
	44 43	+ 1·680	

At Beginning, Thermometer 30°·5.
„ End „ 28°·5. Barometer 769·0 mm.
Chronometer Correction, + 17s. I. 3-4. S. 3.

Digitized by Google

LEIPZIG

OBSERVATIONS OF SAPPHO

IN

1889.

Digitized by Google

LEIPZIG HELIOMETER OBSERVATIONS OF SAPPHO.—DISTANCES.

OBSERVER :—DR. PETER.

Sidereal time.	Scale A.	Micrometer.	Scale B.	Micrometer.	Mean of times and distance.
1889, SEPTEMBER 18.					
Sappho and + 17°·166. (ε) Shutter. (1)					
h m s					h m s
20 6 15·9	93	065	685·3	769	
9 33·4	93	180	685·3	859	20 11 32·0
14 16·4	283	646	492·4	419	4159″·595
16 2·4	283	544	492·5	400	
Sappho and + 15°·185. (λ) (2)					
h m s					h m s
20 23 34·9	308	115	468·1	252	
25 37·4	308	125	468·1	321	20 26 40·8
27 50·9	67	990	708·6	165	5230″·308
29 39·9	67	900	708·6	100	
Sappho and + 15°·185. (λ) (3)					
20 49 16·9	67	350	708·6	457	
52 9·4	67	251	708·6	355	20 54 52·8
58 6·4	308	277	468·2	706	5228″·601
59 58·4	308	373	468·2	742	
Sappho and + 17°·166. (ε) Shutter. (4)					
21 6 7·9	284	083	493·3	670	
8 59·4	284	050	493·3	570	21 10 33·7
11 47·4	92	322	684·5	254	4162″·490
15 19·9	92	372	684·5	368	
Sappho and + 17°·166. (ε) Shutter. (5)					
21 24 36·4	91	010	683·5	999	
26 24·4	91	120	683·5	110	21 27 47·2
28 53·9	283	856	492·3	421	4162″·909
31 13·9	283	843	492·2	282	
Sappho and + 15°·185. (λ) Shutter. (6)					
21 37 1·9	308	811	468·4	675	
39 43·9	308	893	468·4	720	21 41 11·8
43 13·9	67	321	708·3	001	5223″·635
44 47·4	67	299	708·3	892	
Sappho and + 15°·185. (λ) (7)					
21 49 9·9	67	590	708·3	148	
52 56·4	67	521	708·2	995	21 53 46·8
55 19·4	308	950	468·5	923	5222″·061
57 41·4	308	953	468·5	010	
Sappho and + 17°·166. (ε) (8)					
22 3 48·4	283	933	492·3	546	
6 5·4	283	907	492·3	427	22 7 7·4
8 17·9	92	183	684·5	121	4162″·605
10 17·9	92	199	684·5	257	
Sappho and + 17°·183. (μ) (9)					
3 7 39·9	79	461	698·1	698	
10 18·4	79	502	698·2	867	3 13 7·2
15 25·9	298	819	480·5	756	4743″·910
19 4·4	298	841	480·4	582	
Sappho and + 16°·123. (ζ) Screen I. (10)					
3 27 57·9	286	477	490·7	848	
29 52·9	286	510	490·7	960	3 31 52·8
33 39·4	90	799	686·9	632	4259″·930
36 0·9	90	809	686·9	500	
Sappho and + 16°·123. (ζ) (11)					
3 40 24·4	89	865	685·8	480	
44 45·9	89	897	685·7	317	3 45 48·5
48 19·4	285	064	490·1	216	4254″·289
49 44·4	285	081	490·1	337	
Sappho and + 17°·183. (μ) Screen I. (12)					
3 54 5·9	296	589	477·7	981	
55 44·4	296	581	477·7	872	3 57 14·7
58 31·9	77	498	697·1	782	4763″·170
60 36·4	77	495	697·2	909	

Digitized by Google

1889, SEPTEMBER 18—*continued.*

Sappho and + 17°·183. (μ) Screen I. (13)

Sidereal time.	Scale A.	Micrometer.	Scale B.	Micrometer.	Mean of times and distance.
h m s					h m s
4 19 9·4	77	020	697·5	080	
21 17·4	77	070	697·6	226	4 22 49·0
24 30·4	297	171	478·1	340	4773″·788
26 18·9	297	130	478·1	247	

Sappho and + 16°·123. (ζ) Screen I. (14)

Sidereal time.	Scale A.	Micrometer.	Scale B.	Micrometer.	Mean of times and distance.
h m s					h m s
4 33 11·4	285	048	491·0	115	
35 19·9	285	078	491·0	219	4 36 18·4
37 28·9	90	989	685·6	141	4230″·872
39 13·4	90	030	685·5	090	

I. 2-3; S. 2–3 for Nos. 1–8. I. 2; S. 2 for morning observations.
Observed in dark field. In the Sappho observations the prism was not rotated, but was only changed with the direction of rotation. Passing clouds were very troublesome in the beginning of the evening. At the last observation the stars were barely visible in the bright dawn.
Focal point 10·10.
Counterpoise following up to No. (4) inclusive, then preceding.

1889, SEPTEMBER 20.

Sappho and + 17°·166. (ε) Shutter. (15)

Sidereal time.	Scale A.	Micrometer.	Scale B.	Micrometer.	Mean of times and distance.
h m s					h m s
20 37 23·4	87	989	687·4	989	
39 43·4	87	088	687·4	953	20 41 12·9
41 58·4	287	810	488·2	305	4336″·477
45 46·4	287	769	488·2	248	

Sappho and + 15°·185. (λ) (16)

Sidereal time.	Scale A.	Micrometer.	Scale B.	Micrometer.	Mean of times and distance.
h m s					h m s
20 50 14·9	300	470	475·6	722	
51 52·9	300	477	475·7	830	20 53 18·3
54 44·4	74	448	700·1	677	4892″·715
56 20·9	74	444	700·1	540	

Sappho and + 15°·185. (λ) Shutter. (17)

Sidereal time.	Scale A.	Micrometer.	Scale B.	Micrometer.	Mean of times and distance.
21 5 34·9	75	815	701·1	060	
7 35·4	75	789	701·1	939	21 8 47·9
10 20·4	301	850	476·6	118	4892″·909
11 40·9	301	852	476·7	188	

Sappho and + 17°·166. (ε) Shutter. (18)

Sidereal time.	Scale A.	Micrometer.	Scale B.	Micrometer.	Mean of times and distance.
21 15 38·4	288	372	489·0	428	
18 35·9	288	312	489·0	371	21 21 9·3
23 57·9	88	006	688·8	605	4342″·546
28 24·9	88	060	688·8	704	

Sappho and + 16°·129. (κ) Screen I. (19)

Sidereal time.	Scale A.	Micrometer.	Scale B.	Micrometer.	Mean of times and distance.
46 2·1	131	400	643·4	172	
0 5·1	131	178	643·7	527	2 59 8·1
4 6·1	243	131	532·0	170	2428″·216
6 19·1	243	112	532·0	011	

Sappho and + 16°·123. (ζ) Screen I. (20)

Sidereal time.	Scale A.	Micrometer.	Scale B.	Micrometer.	Mean of times and distance.
3 12 0·1	256	400	518·6	608	
14 13·1	256	400	518·7	739	3 15 42·2
17 21·6	118	702	657·0	720	3001″·792
19 14·1	118	666	657·0	590	

Sappho and + 16°·123. (ζ) Screen I. (21)

Sidereal time.	Scale A.	Micrometer.	Scale B.	Micrometer.	Mean of times and distance.
3 2 57·1	119	989	657·9	683	
2 47·1	119	974	657·8	549	3 38 25·7
4 35·1	256	759	519·4	551	2990″·703
5 23·6	256	671	519·6	832	

Sappho and + 16°·129. (κ) (22)

Sidereal time.	Scale A.	Micrometer.	Scale B.	Micrometer.	Mean of times and distance.
4 18 12·1	245	620	532·6	696	
21 53·1	245	634	532·5	500	4 24 18·4
25 14·1	131	392	645·4	172	2465″·293
31 54·1	131	379	645·5	375	

I. 2–3; S. 3 for evening observations. I. 2; S. 2 for Nos. 19, 20 and 21. I. 3; S. 3 for No. 22. Focal point 10·09.
Observed in dark field. Heavy storm; some of the pointings could only be obtained with difficulty through breaks in the clouds. Air very transparent. At both hour-angles the observations had to be discontinued on account of increasing cloud.
Counterpoise following.

Digitized by Google

Sidereal time.	Scale A.	Micrometer.	Scale B.	Micrometer.	Mean of times and distance.
1889, September 22.					
Sappho and + 16°·119. (γ) Screen I. (23)					
h m s					h m s
20 49 17·6	92	894	683·9	670	
51 18·6	92	940	683·9	740	20 53 18·4
55 9·1	283	492	492·9	208	4149″·575
57 28·1	283	390	492·9	186	
Sappho and + 15°·185. (λ) Shutter. (24)					
h m s					h m s
21 7 20·6	301	981	476·4	859	
8 45·1	301	038	476·4	901	21 9 58·0
11 11·6	75	524	701·3	221	4897″·807
12 34·6	75	501	701·4	142	
Sappho and + 15°·185. (λ) Shutter. (25)					
21 15 48·6	74	242	700·3	930	
17 49·1	74	130	700·4	941	21 19 47·1
20 47·1	300	839	475·4	560	4899″·149
24 43·6	300	922	475·3	608	
Sappho and + 16°·119. (γ) Screen I. (26)					
21 34 13·1	283	122	493·0	183	
38 5·6	283	040	493·0	167	21 40 2·0
41 58·1	92	890	683·7	286	4145″·342
45 51·1	92	018	683·7	318	

I. 3-2; S. 3. Focal point 10·09.
Suddenly became clear after very heavy rain. In order not to lose time the clock-comparison before beginning observations was omitted.
Air transparent, but images at times badly defined.
Counterpoise preceding.

Sidereal time.	Scale A.	Micrometer.	Scale B.	Micrometer.	Mean of times and distance.
1889, September 23.					
Sappho and + 16°·119. (γ) Screen I. (27)					
h m s					h m s
20 6 4·2	93	824	680·6	971	
8 54·2	93	840	680·7	162	20 10 47·2
12 31·7	280	867	494·1	137	4057″·053
15 38·7	280	821	494·1	024	
Sappho and + 15°·177. (ι) Screen II. (28)					
h m s					h m s
20 26 18·7	264	319	509·5	429	
28 19·7	264	381	509·6	500	20 30 13·8
31 38·2	109	386	665·1	686	3373″·667
34 38·7	109	326	665·1	592	
Sappho and + 15°·177. (ι) Screen II. (29)					
20 38 51·7	110	892	666·1	057	
43 11·2	110	769	666·1	950	20 44 23·8
45 35·2	265	629	510·7	964	3371″·905
49 57·2	265	681	510·7	004	
Sappho and + 16°·119. (γ) Screen I. (30)					
20 56 37·7	281	339	495·0	410	
21 4 18·2	281	275	495·0	369	21 4 14·2
6 39·7	94	145	681·7	518	4058″·641
9 21·2	94	202	681·7	575	
Sappho and + 16°·119. (γ) Screen I. (31)					
21 19 55·7	93	778	680·7	200	
21 55·7	93	889	680·8	302	21 23 24·3
24 38·7	280	052	494·0	139	4058″·628
27 7·2	280	942	494·1	114	
Sappho and + 15°·177. (ι) Screen II. (32)					
21 32 53·2	264	009	509·9	870	
35 20·7	264	072	509·9	962	21 36 25·3
37 35·2	110	780	665·9	409	3365″·688
39 52·2	110	766	665·8	288	
Sappho and + 15°·177. (ι) Screen II. (33)					
21 44 14·7	110	103	665·8	650	
46 38·2	110	020	665·8	538	21 48 29·1
50 28·2	265	160	511·0	229	3364″·317
52 35·2	265	198	511·0	295	
Sappho and + 16°·119. (γ) Screen I. (34)					
21 57 13·2	281	250	495·0	321	
58 46·2	281	134	495·1	296	22 0 8·5
22 1 16·2	94	055	681·6	353	4058″·186
3 18·2	94	092	681·7	440	

Digitized by Google

1889, SEPTEMBER 23—*continued.*

Sappho and + 16°·129. (κ) Screen I. (35)

Sidereal time.	Scale A.	Micrometer.	Scale B.	Micrometer.	Mean of times and distance.
h m s					h m s
3 20 4·4	85	127	691·5	994	
23 27·9	85	146	691·5	172	3 25 24·0
27 35·9	291	100	486·1	359	4468″·490
30 27·9	291	091	486·1	220	

Sappho and + 15°·164. (α) Screen I. (36)

Sidereal time.	Scale A.	Micrometer.	Scale B.	Micrometer.	Mean of times and distance.
h m s					h m s
4 1 8·9	306	874	470·5	870	
4 21·9	306	886	470·6	016	4 6 29·8
8 26·9	69	690	706·1	970	5132″·895
12 0·4	69	774	706·0	786	

I. 3; S. 3, for evening observations: I. 2–3; S. 2–3, for morning ones.
Observed in dark field. In the evening the stars were extremely faint, diffused and unsteady, so that the pointings could only be made with difficulty. In the morning local cloudiness came on suddenly after the first four pointings. Clouds rising from the north quickly spread over the whole sky, so that only four more pointings could be obtained.
Focal point 10·09. Counterpoise following up to No. 30, inclusive: then preceding.

1889, SEPTEMBER 24.

Sappho and + 16°·119. (γ) Shutter. (37)

Sidereal time.	Scale A.	Micrometer.	Scale B.	Micrometer.	Mean of times and distance.
h m s					h m s
20 25 43·3	281	575	493·4	301	
27 46·8	281	686	493·3	324	20 29 36·8
31 9·3	92	084	681·4	940	4096″·086
33 47·8	92	992	681·4	868	

Sappho and + 16°·119. (γ) Shutter. (38)

Sidereal time.	Scale A.	Micrometer.	Scale B.	Micrometer.	Mean of times and distance.
h m s					h m s
20 39 36·8	93	463	682·5	444	
42 30·3	93	477	682·5	402	20 44 51·2
46 18·3	282	114	494·3	620	4097″·780
50 59·3	282	213	494·2	621	

Sappho and + 15°·177. (ι) Screen II. (39)

Sidereal time.	Scale A.	Micrometer.	Scale B.	Micrometer.	Mean of times and distance.
21 17 21·8	114	089	662·9	766	
20 39·3	114	992	662·9	680	21 21 36·6
23 31·3	262	422	514·8	067	3215″·562
24 53·8	262	522	514·8	124	

I. 3; S. 3. Focal point 10·10.
Everything observed in dark field; amount of cloud very changeable; it became clouded. By mistake B. D. + 16°·123 was twice observed instead of Sappho, as in the beginning Sappho was covered by clouds, and B. D. + 16°·123 from the same cause appeared faint.
Counterpoise preceding.

1889, SEPTEMBER 26.

Sappho and + 16°·119. (γ) Screen I. (40)

Sidereal time.	Scale A.	Micrometer.	Scale B.	Micrometer.	Mean of times and distance.
h m s					h m s
20 20 41·3	81	502	693·2	860	
24 12·8	81	529	693·2	022	20 25 12·3
27 9·3	293	880	482·5	825	4592″·175
28 45·8	293	860	482·4	717	

Sappho and + 13°·175. (η) Screen I. (41)

Sidereal time.	Scale A.	Micrometer.	Scale B.	Micrometer.	Mean of times and distance.
h m s					h m s
20 36 44·3	335	521	441·4	330	
38 12·3	335	562	441·4	363	20 39 31·2
40 24·8	40	873	735·3	471	6396″·644
42 43·3	40	820	735·3	370	

Sappho and + 13°·175. (η) Screen I. (42)

Sidereal time.	Scale A.	Micrometer.	Scale B.	Micrometer.	Mean of times and distance.
20 47 16·8	41	039	736·1	380	
49 59·8	41	108	736·1	480	20 50 35·1
52 31·8	336	458	442·7	722	6392″·975
Clouded.					

I. 2–3; S. 2–3. Focal point 10·10.
Observed with dark field. The observations were obtained during a short interval of clear sky.
Counterpoise preceding.

Digitized by Google

Sidereal time.	Scale A.	Micrometer.	Scale B.	Micrometer.	Mean of times and distance.
1889, September 30.					
Sappho and + 15°·154. (u) Shutter. (43)					
h m s					h m s
21 13 3·9	88	082	687·7	455	
15 0·4	88	247	687·7	520	21 16 50·8
18 40·4	286	225	488·1	452	4318″·163
20 38·4	286	295	488·1	565	
Sappho and + 13°·175. (η) Shutter. (44)					
h m s					h m s
21 28 3·4	299	690	476·7	980	
34 58·9	299	700	476·7	086	21 36 15·0
39 36·4	75	660	699·1	769	4848″·639
42 21·4	75	792	699·1	848	
Rotated prism.					
Sappho and + 13°·175. (η) Screen I. (45)					
21 47 13·9	76	090	700·0	108	
49 53·4	76	159	700·0	214	21 52 50·5
56 3·4	300	908	477·7	445	4847″·473
58 11·4	300	004	477·7	481	
Sappho and + 15°·154. (u) Shutter. (46)					
22 6 2·4	287	833	489·6	102	
10 21·9	287	827	489·7	183	22 11 52·5
13 47·4	88	865	687·1	965	″4305″·676
17 18·4	88	941	687·1	011	

I. 3-4; S. 3. Focal point 10·10.
Became clear suddenly. Stars only to be seen with considerable effort; for a long time quite invisible, and only coming out clearly at odd moments.
Counterpoise following.

Sidereal time.	Scale A.	Micrometer.	Scale B.	Micrometer.	Mean of times and distance.
1889, October 3.					
Sappho and + 14°·169. (y) Screen I. (47)					
h m s					h m s
3 11 9·1	163	637	613·5	500	
13 58·6	163	656	613·5	690	3 15 20·4
16 24·1	213	114	564·1	368	1079″·492
19 49·6	213	267	564·1	390	
Sappho and + 14°·163. (x) Screen II. (48)					
h m s					h m s
3 30 50·1	203	900	573·3	548	
34 21·1	203	816	573·5	880	3 37 34·6
40 44·6	173	091	604·1	210	657″·954
44 22·6	173	321	603·9	203	
Rotated prism.					
Sappho and + 14°·163. (x) Screen II. (49)					
3 51 7·1	172	240	602·7	709	
53 46·6	172	489	602·6	702	3 55 0·4
56 23·6	202	949	573·1	219	646″·261
58 44·1	202	979	573·2	406	
Sappho and + 14°·169. (y) Screen I. (50)					
4 9 12·1	213	500	562·6	687	
11 28·1	213	635	562·6	761	4 13 1·0
14 33·6	162	691	614·2	220	1115″·602
16 50·1	162	754	614·3	353	
Sappho and + 14°·169. (y) Screen I. (51)					
4 29 56·1	162	200	614·7	630	
32 54·1	162	260	614·8	831	4 34 17·4
35 52·6	213	270	561·9	911	1129″·121
38 26·6	213	406	561·7	972	
Sappho and + 14°·163. (x) Screen II. (52)					
4 46 12·1	201	432	573·6	626	
5 0 42·6	201	000	574·1	179	4 59 56·5
5 0·6	173	456	601·5	395	603″·777
7 50·6	173	637	601·3	410	
Rotated prism.					

Digitized by Google

1889, OCTOBER 3—*continued.*

Sappho and + 14°·163. (x) Screen II. (53)

Sidereal time.	Scale A.	Micrometer.	Scale B.	Micrometer.	Mean of times and distance.
h m s					h m s
5 15 19·6	174	117	602·2	403	
19 34·1	174	302	602·1	455	5 21 38·4
23 49·1	202	551	575·8	192	589″·367
27 50·6	202	583	575·9	352	

Sappho and + 14°·169. (y) Screen I. (54)

Sidereal time.	Scale A.	Micrometer.	Scale B.	Micrometer.	Mean of times and distance.
h m s					h m s
5 37 17·1	215	130	562·2	620	
40 11·6	215	311	562·2	606	5 41 28·2
42 58·6	161	313	615·9	160	1170″·085
45 25·6	161	417	615·9	237	

Standard Stars. Screen I. (55)

5 55 34·1	39	071	736·0	906	
57 33·1	39	177	736·0	029	5 59 0·2
6 0 11·1	336	070	440·9	715	6431″·037
2 42·6	336	008	440·9	850	

I. 2–3; S. 3, for Nos. 47–51 : I. 3 ; S. 3, for rest. Focal point 10·01.
Observed in dark field. Air very damp. Images badly defined, faint and unsteady; hazy. Stars for the most part difficult to see. Unsuitable position-angles 111° and 119°. Measurement difficult and straining. The scales were thickly coated with moisture, so that Scale II. could not be properly pointed on.
Counterpoise preceding.

1889, OCTOBER 4.

Standard Stars. Shutter. (56)

h m s					h m s
19 58 39·0	40	101	737·6	301	
20 1 18·5	40	222	737·6	357	20 2 53·8
5 6·0	336	415	440·1	766	6445″·739
6 31·5	336	465	440·1	830	

Sappho and + 14°·163. (x) Screen II. (58)

h m s					h m s
20 28 32·0	190	642	585·6	818	
30 1·0	190	702	585·6	939	20 31 28·0
32 18·0	185	156	591·1	275	113″·848
35 1·0	185	190	591·1	406	

Sappho and + 14°·163. (x) Screen II. (62)

21 6 27·0	184	518	590·4	239	
8 43·5	184	610	590·4	353	21 9 58·8
11 6·5	190	639	585·3	223	120″·217
13 38·0	190	740	585·3	350	

Rotated prism.

Sappho and + 14°·163. (x) Screen II. (64)

21 24 32·5	184	400	590·6	478	
28 12·0	184	479	590·6	614	21 28 33·1
29 34·0	190	911	585·1	048	124″·771
31 54·0	190	023	585·1	151	

Sappho and + 14°·163. (x) Screen II. (66)

21 [illegible]5 31·5	185	121	591·8	874	
[illegible]7 41·0	185	170	591·9	911	21 48 42·8
[illegible]9 53·0	191	180	585·7	733	131·625
5 1 45·5	191	320	585·7	790	

Sappho and + 14°·163. (x) Screen II. (70)

3 20 52·4	194	660	580·3	390	
22 41·4	194	790	580·3	456	3 24 18·2
25 37·9	180	535	595·5	462	316″·671
28 0·9	180	550	595·6	632	

Rotated prism.

Digitized by Google

1889, OCTOBER 4—*continued.*

Sappho and + 14°·163. (x) Screen II. (71)

Sidereal time.	Scale A.	Micrometer.	Scale B.	Micrometer.	Mean of times and distance.
h m s					h m s
3 31 6·4	180	405	595·6	598	3 36 15·0
34 23·4	180	370	595·7	793	323″·884
38 1·9	195	128	580·9	908	
41 28·4	195	321	580·8	889	

Sappho and + 14°·163. (x) Screen II. (74)

Sidereal time.	Scale A.	Micrometer.	Scale B.	Micrometer.	Mean of times and distance.
h m s					h m s
4 20 9·9	196	456	580·6	690	4 25 55·0
23 8·4	196	605	580·6	740	355″·478
28 32·4	179	778	596·2	280	
31 49·4	179	751	596·4	520	

Rotated prism.

Sappho and + 14°·163. (x) Screen II. (75)

Sidereal time.	Scale A.	Micrometer.	Scale B.	Micrometer.	Mean of times and distance.
4 35 42·4	179	574	596·5	513	4 46 36·3
46 49·9	179	286	596·9	000	368″·980
50 6·4	196	370	579·7	849	
53 46·4	196	572	579·7	871	

Standard Stars. (76)

Sidereal time.	Scale A.	Micrometer.	Scale B.	Micrometer.	Mean of times and distance.
5 10 16	40	952	737·3	484	5 16 44·8
14 41	40	070	737·3	523	6438″·922
19 24	336	598	440·5	502	
22 38	336	627	440·5	602	

I. 3–4 ; S. 3, for standards : afterwards improving till I. 2 ; S. 2, for Nos. 62–66. I. 2–3 ; S. 2–3, for morning observations. Focal point 10·01.
Observed in dark field. Sky cloudless. The bright stars were very diffused, but this was not noticeable with the fainter or screened stars. For west hour-angles everything was observed in the usual way with passing the images through one another. For east hour-angles the position-angles were similarly observed. Only in the second set of distance ($20^h\ 46^m - 58^m$) another method was tried ; after accurate pointing for P by moving the distance handle, the images were brought into coincidence. This set for distance should probably not be used.
Observer's eye very wearied in the morning.
Counterpoise preceding.

1889, OCTOBER 12.

Sappho and + 11°·135. (s) Screen I. (77)

Sidereal time.	Scale A.	Micrometer.	Scale B.	Micrometer.	Mean of times and distance.
h m s					h m s
19 51 51·8	309	640	469·9	472	19 55 40·6
54 33·8	309	652	469·9	584	5210″·797
57 19·8	69	275	709·7	547	
58 56·8	69	304	709·7	650	

Sappho and + 13°·130. (m) Shutter. (78)

Sidereal time.	Scale A.	Micrometer.	Scale B.	Micrometer.	Mean of times and distance.
h m s					h m s
20 5 44·8	54	390	724·6	640	20 10 25·7
9 11·3	54	423	724·7	762	5862″·646
11 29·3	324	810	454·9	722	
15 17·3	324	936	454·9	718	

Rotated prism.

Sappho and + 13°·130. (m) Shutter. (79)

Sidereal time.	Scale A.	Micrometer.	Scale B.	Micrometer.	Mean of times and distance.
20 19 24·8	323	553	453·8	184	20 23 16·8
21 15·8	323	680	453·7	206	5868″·176
25 36·8	52	628	723·0	702	
26 49·8	52	744	723·0	756	

Sappho and + 11°·135. (s) Screen I. (80)

Sidereal time.	Scale A.	Micrometer.	Scale B.	Micrometer.	Mean of times and distance.
20 32 42·8	68	290	708·2	820	20 36 29·8
35 9·8	68	336	708·3	959	5201″·375
38 21·8	308	851	469·4	641	
39 44·8	308	813	469·5	791	

Sappho and + 11°·135. (s) Screen I. (81)

Sidereal time.	Scale A.	Micrometer.	Scale B.	Micrometer.	Mean of times and distance.
20 46 0·8	308	699	469·6	769	20 49 43·9
47 57·8	308	751	469·6	860	5197″·798
51 16·8	68	512	708·1	631	
53 40·3	68	599	708·1	725	

Sappho and + 13°·130. (m) Shutter. (82)

Sidereal time.	Scale A.	Micrometer.	Scale B.	Micrometer.	Mean of times and distance.
20 57 17·3	52	130	723·6	312	20 59 42·3
58 24·3	52	150	723·6	427	5883″·041
21 0 54·8	323	456	453·0	499	
2 12·8	323	539	453·0	547	

Rotated prism.

Digitized by Google

1889, OCTOBER 12—*continued.*

Sappho and + 13°·130. (m) Shutter. (83)

Sidereal time.	Scale A.	Micrometer.	Scale B.	Micrometer.	Mean of times and distance.
h m s					h m s
21 6 39·8	324	870	453·9	635	
10 6·8	324	890	453·9	693	21 11 11·1
13 4·8	52	097	723·9	869	5887″·388
14 52·8	52	140	723·9	942	

Sappho and + 11°·135. (s) Screen I. (84)

Sidereal time.	Scale A.	Micrometer.	Scale B.	Micrometer.	Mean of times and distance.
h m s					h m s
21 18 42·8	68	188	707·7	511	
21 20·3	68	224	707·7	629	21 28 34·9
35 38·8	308	178	470·3	737	5185″·693
38 37·8	308	262	470·3	819	

I. 2; S. 2, in beginning. I. 3–2; S. 3–2, at end. Focal point 10·01.
Observed in dark field. Atmospheric conditions satisfactory up to the last set, which was disturbed by cloud. From that time on the amount of cloud was very variable, and for west hour-angles it was completely clouded.
Counterpoise preceding.

1889, OCTOBER 15.

Sappho and + 12°·126. (v) Screen I. (85)

Sidereal time.	Scale A.	Micrometer.	Scale B.	Micrometer.	Mean of times and distance.
h m s					h m s
2 52 0·4	315	286	462·3	995	
56 1·4	315	350	462·3	038	2 57 24·3
59 52·9	61	475	715·5	421	5508″·879
3 1 42·4	61	457	715·5	531	

Sappho and + 11°·102. (c) Shutter. (86)

Sidereal time.	Scale A.	Micrometer.	Scale B.	Micrometer.	Mean of times and distance.
h m s					h m s
3 7 22·9	35	350	741·9	061	
9 54·9	35	444	741·9	080	3 11 24·8
13 29·9	341	134	435·9	982	6646″·294
14 51·4	340	102	435·0	129	

Rotated prism.

Sappho and + 11°·102. (c) Shutter. (87)

3 22 44·4	342	734	437·1	150	
25 35·4	342	701	437·2	310	3 27 26·3
28 16·9	36	820	742·3	389	6636″·679
33 8·4	36	967	742·2	353	

Sappho and + 12°·126. (v) Screen I. (88)

3 40 39·4	61	230	716·6	271	
43 0·4	61	230	716·6	435	3 45 33·4
47 32·9	316	542	461·9	370	5536″·235
51 0·9	316	697	461·9	420	

Sappho and + 12°·126. (v) Shutter. (89)

3 58 49·4	316	802	461·7	122	
4 2 28·9	316	975	461·6	135	4 4 19·2
6 35·4	60	564	716·2	011	5545″·776
9 22·9	60	649	716·2	090	

Sappho and + 11°·102. (c) Shutter. (90)

4 19 50·9	36	246	740·9	992	
22 40·4	36	466	740·8	948	4 24 11·8
26 20·9	341	989	438·0	995	6601″·509
27 54·9	341	942	438·0	182	

Rotated prism.

Sappho and + 11°·102. (c) Shutter. (91)

32 26·9	340	696	437·1	096	
34 32·9	340	682	437·3	255	4 36 47·9
37 50·4	36	753	740·3	390	6593″·638
42 21·4	36	923	740·2	340	

Sappho and + 12°·126. (v) Shutter. (92)

4 48 57·9	59	526	716·3	025	
51 14·9	59	550	716·3	175	4 52 26·3
53 41·9	316	194	460·3	846	5571″·692
55 50·4	316	320	460·3	839	

I. 2; S. 2, for first three sets; then I. 3–2; S. 2–3. Focal point 10·00.
Observed in dark field. Very heavy haze at the larger zenith-distances, which at times made the images very faint. In general they were good in spite of moon and haze.
Counterpoise preceding.

Digitized by Google

Sidereal time.	Scale A.	Micrometer.	Scale B.	Micrometer.	Mean of times and distance.
1889, October 16.					
Sappho and + 12°·104. (f) Screen I. and Shutter. (93)					
h m s					h m s
19 46 41·3	321	302	455·0	400	
48 26·3	321	458	455·0	368	19 52 47·6
56 44·8	54	900	721·7	392	5797″·885
59 17·8	54	932	721·8	499	
Sappho and + 10°·115. (r) Shutter. (94)					
h s					h m s
20 7 56·5	51	920	724·7	407	
9 47·8	51	976	724·7	521	20 12 24·9
12 2·3	324	414	452·0	470	5928″·299
19 52·8	324	549	451·9	452	
Rotated prism.					
Sappho and + 10°·115. (r) Shutter. (95)					
20 25 25·8	325	917	452·9	830	
27 18·8	325	919	453·0	884	20 29 39·7
31 45·8	52	322	725·7	862	5928″·708
34 8·3	52	372	725·8	934	
Sappho and + 12°·104. (f) Screen I. and Shutter. (96)					
20 40 45·3	54	791	722·4	396	
43 34·8	54	700	722·5	523	20 44 42·4
46 2·3	322	578	455·2	030	5812″·574
48 27·3	322	582	455·3	101	
Sappho and + 12°·104. (f) Screen I. and Shutter. (97)					
20 53 16·8	322	564	455·2	007	
55 12·3	322	620	455·2	079	20 56 59·3
58 40·8	54	470	722·6	637	5815″·183
21 0 47·3	54	518	722·6	672	
Sappho and + 10°·115. (r) Shutter. (98)					
21 5 26·3	52	390	725·7	756	
7 9·3	52	399	725·7	870	21 8 14·3
8 39·3	325	800	453·0	830	5927″·220
11 42·3	325	820	453·1	950	
Rotated prism.					
Sappho and + 10°·115. (r) Shutter. (99)					
21 17 33·3	325	455	453·0	515	
19 18·8	325	493	453·1	625	21 20 24·8
21 36·3	52	119	725·6	421	5926″·662
23 10·8	52	160	725·7	521	
Sappho and + 12°·104. (f) Screen I and Shutter. (100)					
21 27 7·3	54	947	722·8	560	
29 1·3	54	954	722·9	720	21 30 12·4
31 35·3	322	679	455·8	320	5822″·448
33 5·8	322	675	455·8	320	
Sappho and + 12°·126. (v) Screen I. and Shutter. (101)					
2 49 34·8	333	847	443·1	992	
52 37·8	333	960	443·0	010	2 54 18·4
56 44·3	42	350	733·8	897	6319″·419
58 16·8	42	290	733·9	041	
Sappho and + 11°·102. (c) Shutter. (102)					
3 17 15·8	52	290	721·6	570	
19 28·3	53	379	722·6	631	3 21 36·7
24 4·8	322	525	454·1	853	5837″·800
25 37·8	322	532	454·2	988	
Rotated prism.					
Sappho and + 11°·102. (c) Shutter. (103)					
3 30 54·8	323	240	455·4	977	
33 46·8	323	179	455·6	180	3 35 24·7
36 12·8	54	729	723·2	060	5829″·708
40 44·3	54	878	723·1	050	
Sappho and + 12°·126. (v) Screen I. and Shutter. (104)					
3 47 14·3	42	911	735·1	164	
49 41·3	42	886	735·2	370	3 51 50·9
53 58·8	335	510	443·4	252	6352″·596
56 29·3	335	622	443·3	300	

Digitized by Google

Sidereal time.	Scale A.	Micrometer.	Scale B.	Micrometer.	Mean of times and distance.	Sidereal time.	Scale A.	Micrometer.	Scale B.	Micrometer.	Mean of times and distance.
1889, October 16—*continued.*											
Sappho and + 12°·126 (v) Screen I. and Shutter. (105)						Sappho and + 11°·102. (c) Shutter. (106)					
h m s					h m s	h m s					h m s
4 4 0·8	335	742	443·1	010		4 18 47·3	55	870	723·0	939	
5 45·3	335	845	443·1	062	4 7 52·8	25 34·8	55	130	722·9	824	4 26 10·3
9 7·3	42	391	735·7	760	6361″·130	28 55·3	322	730	455·9	590	5800″·472
12 37·8	42	360	735·8	938		31 23·8	322	784	455·9	689	

I. 2–3; S. 3–2, to No. 98: then I. 2; S. 2. For morning observations. I. 2; S. 2. Focal point 10·00.
Observed in dark field. For east hour-angles air transparent, but in the beginning the observations were injured by smoke from manufactories. For west hour-angles a few clouds in the sky. Eye very tired at end, and on this account the last two distances are more uncertain.
Counterpoise preceding up to No. 100, inclusive: then following.

1889, October 18.

Sappho and + 10°·105. (h) (107)

h m s					h m s
3 12 47·0	258	728	517·1	863	
15 52·0	258	664	517·2	072	3 17 40·6
19 17·5	117	991	659·5	896	3076″·694
22 46·0	117	190	659·4	809	

I. 3; S. 3. Focal point 10″·00.
Observed in dark field. Stars only seen with difficulty on account of fog. At the end the object-glass was completely covered. Instead of B. D. + 11°·120 and Sappho, the parallel pair of stars + 10°·106 and 10°·112 was observed.
Counterpoise following.

1889, October 23.

Sappho and + 11°·102. (c) Shutter. (108)

h m s					h m s
0 35 28·6	96	992	681·1	296	
38 13·1	96	049	681·1	401	20 39 3·9
40 26·1	281	205	497·5	080	4005″·210
42 7·6	281	260	497·5	140	

Sappho and + 9°·110. (n) Shutter. (110)

h m s					h m s
20 58 32·6	77	642	699·5	628	
59 58·6	77	700	699·5	681	21 1 27·0
21 2 51·6	299	514	478·2	936	4815″·047
4 25·1	299	576	478·2	999	

Sappho and + 10°·105. (h) Shutter. (111)

3 3 46	223	979	552·2	376	
7 39	223	180	552·1	340	3 19 49
2 16	151	249	623·7	725	1560″·199
5 35	151	219	623·8	839	

S. 2–3; S. 2–3. Focal point 10·01.
Observed in dark field, and during a short interval of clear sky. The measures had to be hurried as much as possible. For west angles there was no assistant; was only a short time clear.

Digitized by Google

Sidereal time.	Scale A.	Micrometer.	Scale B.	Micrometer.	Mean of times and distance.
1889, October 24.					
Sappho and + 9°·101. (g) Shutter. (112)					
h m s					h m s
20 24 33·6	261	863	513·3	586	
25 46·6	261	876	513·4	704	20 27 22·9
28 49·1	113	630	662·2	002	3223″·967
30 22·1	113	700	662·1	091	
Sappho and + 11°·102. (c) Shutter. (113)					
h m s					h m s
20 42 49·1	84	250	690·5	229	
44 38·6	84	261	690·6	365	20 47 54·7
51 9·1	290	230	485·1	380	4469″·396
53 2·1	290	325	485·1	420	
Rotated prism.					
Sappho and + 11°·102. (c) Shutter. (114)					
20 56 41·6	291	762	486·0	641	
58 19·6	291	921	485·9	598	21 0 4·0
21 1 47·6	85	284	691·9	951	4475″·025
3 27·1	85	290	691·9	090	
Sappho and + 9°·101. (g) Shutter. (115)					
21 9 43·1	114	647	662·4	500	
11 41·6	114	780	662·5	560	21 19 9·5
25 13·1	262	870	515·5	013	3201″·951
30 0·1	262	832	515·7	217	
Sappho and + 9°·101. (g) Shutter. (116)					
21 33 16·6	262	721	515·7	172	
35 37·1	262	821	515·8	235	21 36 21·2
36 40·6	115	162	662·9	979	3195″·036
39 50·6	115	352	662·9	960	
Sappho and + 11°·102. (c). Shutter. (117)					
21 44 56·6	85	487	692·6	661	
47 17·6	85	495	692·7	799	21 48 6·4
49 21·1	292	677	486·0	581	4493″·164
50 50·1	292	729	486·0	711	

I. 2–3; S. 2–3. Focal point 10·01.
Observed in dark field and through a gap in the clouds.
Counterpoise preceding.

Sidereal time.	Scale A.	Micrometer.	Scale B.	Micrometer.	Mean of times and distance.
1889, October 26.					
Sappho and + 8°·110. (a) Screen I. (119)					
h m s					h m s
3 22 25·7	290	421	486·0	298	
25 15·7	290	376	486·0	456	3 27 18·1
28 40·7	85	240	690·5	321	4448″·331
32 50·2	85	375	690·5	333	
Sappho and + 10°·105. (h) Shutter. (120)					
h m s					h m s
3 40 5·2	94	221	680·5	350	
43 46·2	94	249	680·6	474	3 45 51·6
47 48·2	280	297	495·0	281	4037″·136
51 46·7	280	496	494·9	206	
Rotated prism.					
Sappho and + 10°·105. (h) Shutter. (121)					
3 58 1·7	281	926	495·7	386	
4 2 26·2	281	083	495·7	366	4 4 45·1
9 16·2	94	968	681·2	350	4046″·272
Clouded.					

I. 3; S. 2–3. Focal point 10·00.
Observed in dark field. Became clear immediately before. Pointings uncertain on account of faintness and undefined appearance of images.
Soon became cloudy again.
Counterpoise following.

Digitized by Google

Sidereal time.	Scale A.	Micrometer.	Scale B.	Micrometer.	Mean of times and distance.
1889, October 27.					
Sappho and + 9°·101. (g) Shutter. (122)					
h m s					h m s
21 6 43·4	233	419	542·8	921	
12 5·4	233	510	542·7	028	21 15 29·3
20 32·9	141	060	633·9	851	1978″·519
22 35·4	142	145	633·9	956	
Sappho and + 9°·090. (b) (123)					
h m s					h m s
21 31 33·4	133	890	642·1	100	
33 46·4	133	035	642·1	168	21 36 29·8
38 33·9	242	648	534·7	950	2351″·037
42 5·4	242	735	534·7	018	
Rotated prism.					
Sappho and + 9°·090. (b) Shutter. (124)					
21 46 37·4	242	682	534·7	979	
48 12·4	242	704	534·7	082	21 49 31·4
50 26·4	133	998	642·1	094	2350″·073
52 49·4	133	121	642·0	102	
Sappho and + 9°·101. (g) Screen I. (125)					
21 59 42·4	142	209	633·9	070	
22 3 7·4	142	209	634·0	190	22 4 29·7
5 56·4	234	556	543·7	150	1978″·599
9 12·4	234	612	543·8	250	

I. 3-4; S. 3 for first two; then I. 2–3; S. 2–3. Focal point 10·00.
Observed in dark field. It cleared very gradually. The stars, especially at the beginning, were large diffused masses. The observations are of very doubtful accuracy.
Counterpoise preceding.

Digitized by Google

LEIPZIG HELIOMETER OBSERVATIONS OF SAPPHO—POSITION ANGLES.

OBSERVER: DR. PETER.

1889, OCTOBER 4.

Sidereal Time.	Position Circle Reading Estimated.	Micrometer I. Foll. Div.	Micrometer I. Index.	Micrometer I. Prec. Div.	Position Circle Reading Estimated.	Micrometer II. Foll. Div.	Micrometer II. Index.	Micrometer II. Prec. Div.	Mean of Times and Circle Readings.
			Standard Stars. Shutter.						(57)
h m s	′	″	″	″	°	″	″	″	h m s
20 8 13·0	328 14	459	204	451	148 21	070	082	069	20 13 1·1
11 36·5	13	415	201	411	19	033	075	038	° ′ ″
14 8·0	17	575	202	573	22	192	075	192	148 17 47
18 7·0	16	555	208	552	22	170	081	170	

Sidereal Time.	Index I. Estimated.	Index II. Estimated.	Mean of Times and Circle Readings.
Sappho and + 14°·163. (x) Screen II.			(59)
h m s	° ′	° ′	h m s
20 36 21·0	31 8·0	211 13·0	20 42 3·4
40 50·5	28 55·0	209 0·0	° ′ ″
44 25·0	27 29·0	207 33·0	208 34 37
46 37·0	26 37·0	206 42·0	
Rotated prism.			
Sappho and + 14°·163. (x) Screen II.			(63)
21 17 46·0	197 0	17 5·5	21 20 5·0
19 17·0	196 6·5	16 19	° ′ ″
20 38·0	197 20	17 25	196 51 11
22 39·0	196 43·5	16 50	
Rotated prism.			
Sappho and + 14°·163. (x) Screen II.			(67)
21 54 28·0	7 1	187 8	21 57 5·6
56 0·0	6 41	186 47	° ′ ″
58 4·0	7 42·5	187 50	187 17 49
59 50·5	7 33	187 40	

Sidereal Time.	Index I. Estimated.	Index II. Estimated.	Mean of Times and Circle Readings.
Sappho and + 14°·163. (x) Screen II.			(60)
h m s	° ′	° ′	h m s
20 49 16·7	25 13·5	205 20·0	20 54 58·6
53 11·0	24 7	204 12	° ′ ″
56 56·5	24 35·5	204 41	204 21 38
21 0 30·0	23 19·5	203 24·5	
Sappho and + 14°·163. (x) Screen II.			(65)
21 34 8·5	192 18	12 23	21 37 31·9
36 46·0	191 30	11 37	° ′ ″
38 52·0	192 46	12 52	192 15 35
40 21·0	192 16·5	12 22·2	
Sappho and + 14°·163. (x) Screen II.			(68)
2 59 54·4	332 18	152 22·5	3 3 54·8
3 2 11·4	332 12	152 18·0	° ′ ″
5 59·4	332 34	152 39·5	152 24 51
7 33·9	332 25	152 30·0	
Rotated prism.			

Digitized by Google

Sidereal Time.	Index I. Estimated.	Index II. Estimated.	Mean of Times and Circle Readings.	Sidereal Time.	Index I. Estimated.	Index II. Estimated.	Mean of Times and Circle Readings.
			1889, OCTOBER 4—*continued.*				
Sappho and + 14°·163. (x) Screen II. (69)				Sappho and + 14°·163. (x) Screen II. (72)			
m s	° ′	° ′	h m s	h m	°	° ′	h m s
3 9 43·4	332 28	152 34	3 13 36·3	3 50 20·4	149 56·5	330 2	3 55 14·0
12 43·4	332 13	152 20	° ′ ″	53 6·4	149 58	330 3	° ′ ″
15 4·9	331 40·5	151 46	152 1 19	56 12·4	150 16	330 21	150 7 45
16 53·4	331 31·5	151 37·5		4 1 16·9	150 10	330 15·5	
					Rotated prism.		
Sappho and 14°·163. (x) Screen II. (73)							
4 5 44·9	150 0	330 5	h m s				
8 32·9	149 45	329 50	4 9 58·9				
10 43·4	149 22	329 29	° ′ ″				
14 54·4	149 10	329 15·5	149 37 4				

I. 3; S. 3-4, for standards: afterwards I. 2; S. 2, for evening observations.
I. 2-3; S. 2-3, for morning observations. Focal point 10·01.
The counterpoise was preceding during both the evening and morning observations.
Observed in dark field. Sky free from cloud. The bright stars were very diffused, but this was not noticeable with the fainter or screened ones. The position angles were only read to 1′ without pointing on the division, as the distance was very small. Eye *very* tired in the morning.

1889, OCTOBER 25.

Sidereal Time.	Position Circle Reading Estimated.	Micrometer I.			Position Circle Reading Estimated.	Micrometer II.			Mean of Times and Circle Readings.
		Foll. Div.	Index.	Prec. Div.		Foll. Div.	Index.	Prec. Div.	
				Standard Stars.					(118)
h m s	° ′	″	″	″	° ′	″	″	″	
20 45 23	328 17	590	200	589	148 22	181	052	182	h m s
47 22	16	580	202	579	22	172	052	173	20 49 53·3
51 10	14	459	202	455	21	048	049	048	° ′ ″
55 38	14	460	198	458	21	050	048	049	148 18 12

Counterpoise preceding. Focal point 10·00.

Digitized by Google

OBSERVATIONS OF THERMOMETERS AND BAROMETER.—LEIPZIG.

Date. 1889.	Thermometer in °C.			Barometer.	
	Sidereal time.	Internal.	External.	Sidereal time.	Barometer.
	h m	°	°	h m	mm
Sept. 18	19 59	+ 9·7	+ 9·1	19 52	756·1
	20 33	...	+ 7·5	21 52	756·1
	21 19	+ 7·9	+ 6·9	23 52	756·0
	21 46	...	+ 7·0	...	...
	22 13	+ 7·1	+ 6·5	...	...
	3 6	+ 5·4	+ 4·8	1 53	755·8
	3 38	...	+ 4·5	3 53	755·2
	4 4	+ 4·2	+ 3·7	5 53	754·9
	4 49	+ 3·6	+ 3·5	...	...
Sept. 20	20 25	+ 9·0	+ 8·6	19 59	739·0
	20 58	...	+ 8·2	22 0	739·4
	21 32	+ 8·3	+ 8·1	...	...
	2 43	+ 6·4	+ 6·5	2 0	739·0
	3 21	...	+ 6·5	4 1	738·8
	4 41	+ 6·2	+ 6·2	6 1	738·9
Sept. 22	20 44	+ 8·0	+ 7·0	20 7	741·7
	21 14	...	+ 5·8	22 8	742·1
	21 50	+ 6·4	+ 5·7	...	...
Sept. 23	20 0	+ 9·9	+ 9·2	18 11	748·9
	20 37	...	+ 8·2	20 11	749·3
	21 12	+ 8·2	+ 7·7	22 12	749·2
	21 41	...	+ 6·2	0 12	749·1
	22 11	+ 6·6	+ 5·5	2 12	749·1
	3 7	+ 5·0	+ 4·6	4 13	749·1
	4 27	+ 3·1	+ 3·0	6 13	749·0
Sept. 24	20 0	+ 12·3	+ 11·1	18 15	744·7
	20 37	...	+ 10·1	20 15	744·0
	21 46	+ 9·9	+ 9·4	22 15	743·0
Sept. 26	20 13	+ 10·0	+ 9·6	18 23	751·1
	20 44	...	+ 8·9	20 23	752·1
	21 5	+ 9·5	+ 9·2	22 23	752·2
Sept. 30	21 9	+ 9·9	+ 9·2	20 39	742·7
	21 44	...	+ 8·3	22 39	744·1
	22 23	+ 8·4	+ 8·1	...	...

Date. 1889.	Thermometer in °C.			Barometer.	
	Sidereal time.	Internal.	External.	Sidereal time.	Barometer.
	h m	°	°	h m	mm
Oct. 3	2 55	+ 6·2	+ 5·9	2 52	749·6
	3 46	...	+ 5·6	4 52	749·8
	4 21	+ 5·9	+ 6·0	6 52	750·7
	5 10	...	+ 5·7	...	...
	6 7	+ 5·3	+ 5·7	...	...
Oct. 4	19 26	+ 12·2	+ 11·9	18 54	751·7
	20 20	...	+ 11·4	20 55	751·8
	20 48	...	+ 10·8	22 55	751·7
	21 3	...	+ 10·4	2 26	751·3
	21 41	...	+ 9·5	4 26	750·9
	22 1	+ 10·0	+ 9·1	6 26	751·0
	2 51	+ 7·2	+ 7·3	...	...
	3 18	...	+ 6·0	...	...
	3 43	...	+ 5·8	...	...
	4 16	...	+ 5·5	...	...
	4 56	...	+ 5·0	...	...
	5 32	+ 5·1	+ 5·0	...	...
Oct. 12	19 48	+ 11·4	+ 10·5	19 26	748·2
	20 17	...	+ 9·7	21 26	749·0
	20 43	+ 10·1	+ 9·2	23 27	749·0
	21 4	...	+ 8·7	...	...
	21 40	+ 9·2	+ 8·9	...	...
Oct. 15	2 42	+ 5·0	+ 4·3	1 39	755·0
	3 18	...	+ 3·8	3 39	755·0
	3 55	+ 4·2	+ 3·7	5 39	755·1
	4 30	...	+ 3·6	...	..
	5 3	+ 3·2	+ 3·0	...	.
Oct. 16	19 42	+ 9·7	+ 8·0	19 42	754·1
	20 40	...	+ 8·0	21 42	754·0
	20 46	+ 8·1	+ 7·3	1 43	753·1
	21 15	...	+ 7·3	3 43	753·0
	21 36	+ 7·3	+ 7·1	5 43	752·1
	2 43	+ 4·7	+ 4·3	...	...
	3 28	...	+ 3·4	...	...
	3 58	+ 3·7	+ 3·2	...	...
	4 35	+ 3·4	+ 2·7	...	...

Digitized by Google

Date, 1889.	Thermometer in °C.			Barometer.		Date. 1889.	Thermometer in °C.			Barometer.	
	Sidereal time.	Internal.	External.	Sidereal time.	Barometer.		Sidereal time.	Internal.	External.	Sidereal time.	Barometer.
	h m	°	°	h m	mm		h m	°	°	h m	mm
Oct. 18	3 1	+ 17·3	+ 7·6	1 50	744·1	Oct. 25	20 32	+ 9·1	+ 9·8	20 17	755·3
	3 41	...	+ 6·3	3 51	743·9						
	...	...	...	5 51	743·3						
						Oct. 26	3 18	+ 2·1	+ 0·3	2 22	758·9
Oct. 23	19 43	+ 11·2	+ 10·2	20 9	746·5		3 55	...	+ 0·1	4 22	758·2
	20 32	+ 10·6	+ 10·2	22 10	747·2		4 32	+ 0·7	0·0	...	...
	21 5	...	+ 9·2	...	...						
	2 58	+ 8·1	+ 8·1	...	...						
Oct. 24	20 12	+ 10·9	+ 10·2	20 13	752·4	Oct. 27	20 55	+ 4·2	+ 3·7	20 25	752·9
	20 54	...	+ 9·9	22 13	752·6		21 44	...	+ 3·3	22 25	752·1
	21 55	+ 9·5	+ 9·0	...	...		22 13	+ 3·3	+ 3·2	...	...

Digitized by Google

OBSERVATIONS TO DETERMINE THE ERRORS OF EQUATORIAL ADJUSTMENT OF THE LEIPZIG HELIOMETER.

1889, JUNE 6.

	Sidereal time.	Position circle.	Declination circle.	Hour circle.
α Ursæ Minoris. (Lower culmination.)				
Counterpoise.	h m s			h m s
Following	12 47 56·2	89°	88° 40′ 37″·5	11 24 39·2
	13 3 40·2	269	40 34·5	40 10·8
Preceding	13 21 45·4	269	91 16 14·0	0 9 20·8
	36 22·9	89	16 20·0	23 52·8
ι Virginis.				
Following	13 54 28·3	89	354 33 3·0	23 43 33·8
	14 5 30·3	269	33 1·0	54 35·4
Preceding	14 13 59·0	269	185 23 45·5	12 3 12·2
	21 22·7	89	23 49·0	10 36·4

Thermometer (External).		Barometer.	
h m		m	mm
At 12 43	+ 23°·0 C.	At 13 0	755·8
13 46	+ 21·3	15 1	755·9
14 27	+ 20·7	17 1	755·8

1889, JULY 24.

	Sidereal time.	Position circle.	Declination circle.	Hour circle.
Cephei 51 Hev. (Lower culmination.)				
Counterpoise.	h m s			h m s
Following	18 37 1·1	89	87° 11′ 4″·5	11 46 8·3
	50 26·1	269	10 59·0	59 35·0
Preceding	19 2 56·2	269	92 45 58·0	0 17 7·3
	14 6·3	89	46 3·0	28 23·5
δ Aquilæ.				
Following	19 29 24·2	89	358 52 21·0	23 23 4·9
	19 36 21·7	269	52 15·0	30 2·7
Preceding	19 45 18·3	269	181 4 32·5	11 39 7·9
	53 35·8	89	4 40·0	47 26·0

Thermometer (External).		Barometer.	
m		h m	mm
At 18 18	+ 14°·0 C.	At 18 11	748·5
19 21	+ 13·0	20 11	749·2
20 0	+ 12·9		

1889, September 20.

	Sidereal time.	Position circle.	Declination circle.	Hour circle.
ε Ursæ Minoris. (Lower culmination.)				
Counterpoise.	h m			h m s
Preceding	4 53 45·1	269°	97° 45′ 22″·0	23 56 49·9
	5 1 36·5	89	97 45 23·5	0 4 47·3
Following	5 10 51·1	89	82 11 37·5	12 12 10·0
	5 18 48·7	269	82 11 34·0	12 20 8·5
ε Orionis.				
Preceding	5 27 57·4	269	181 11 48·5	11 56 50·5
	5 34 39·5	89	181 12 3·5	12 3 33·0
Following	5 42 32·3	89	358 45 3·0	0 11 16·3
	49 5·6	269	358 44 59·5	0 17 49·2

Thermometer (External).		Barometer.	
h m		h m	mm
At 4 41	+ 6°·2 C.	At 4 1	738·8
5 44	+ 6·2	6 1	738·9

1889, November 1.

	Sidereal time.	Position circle.	Declination circle.	Hour circle.
α Aquilæ.				
Counterpoise.	h m s			h m s
Preceding	19 30 24·3	269°	171° 21′ 17″·7	11 44 24·3
	37 56·4	89	21 21·2	51 56·7
Following	19 46 45·0	89	8 35 43·5	0 0 33·8
	54 54·3	269	35 34·6	8 42·7
76 Draconis. (Upper culmination.)				
Following	20 14 3·7	269	82 6 52·2	23 21 41·4
	20 24 19·6	89	6 59·5	31 54·7
Preceding	20 35 55·7	89	97 50 4·1	11 45 30·6
	45 58·4	269	50 7·9	55 31·5

Thermometer (External).		Barometer.	
m		h m	mm
At 19 25	+ 8°·7 C.	At 18 46	751·5
20 50	+ 6·2	20 46	751·5

Digitized by Google

GÖTTINGEN

OBSERVATIONS OF SAPPHO

IN

1889.

Digitized by Google

GÖTTINGEN HELIOMETER OBSERVATIONS OF SAPPHO.—DISTANCES.

Observers: DRS. SCHUR and AMBRONN.

Sidereal Time.	Scale divisions.	Micrometer.	Mean of times. — Distance.
1889. September 18. AMBRONN.			
Sappho and + 17′·166. (ε) (1)			
h m s		r	
21 11 13	52 354	4·478	h m s
12 7		·499	21 16 17·3
19 32	156 251	4·220	4162″·456
22 17		·237	
Sappho and + 17°·166. (ε) (2)			
h m s		r	
21 26 57	156 251	4·340	h m
30 42		·266	21 33 ″·5
35 42	52 354	4·553	4162″·420
39 9		·559	
Sappho and + 15°·185. (λ) (3)			
21 50 40	39 369	2·212	
53 42		·259	h m s
57 0	169 238	2·477	21 55 1·3
58 43		·591	5220″·119
Sappho and + 15°·185. (λ) (4)			
22 1 0	169 238	2·590	
3 9		·630	h m s
7 45	39 369	2·020	22 5 37·3
10 38		·054	5218″·746
Sappho and + 17°·183. (μ) (5)			
3 57 36	45 363	4·890	
4 0 12		5·078	h m s
5 3	164 244	3·518	4 3 2·8
9 20		·261	4769″·340
Sappho and + 17°·183. (μ) (6)			
4 14 24	164 244	3·078	
15 53		2·982	h m s
20 24	45 364	1·936	4 19 23·8
26 54		2·115	4776″·376
Sappho and + 16°·123. (ζ) (7)			
4 38 34	52 357	2·784	
39 55		·702	h m s
43 2	158 252	2·129	4 41 44·3
45 26		·251	4223″·920
1889, September 23. AMBRONN.			
Sappho and + 16°·119. (γ) (8)			
h m s		r	
21 23 28	53 354	2·162	h m s
27 45		1·998	21 29 16·3
31 44	155 253	2·703	4057″·940
34 8		·735	
Sappho and + 16°·119. (γ) (9)			
h m s		r	
21 39 4	155 253	2·718	h m s
41 40		·665	21 43 44·3
46 10	54 355	2·039	4057″·805
48 3		1·997	
Sappho and + 15°·177. (ι) (10)			
22 1 54	62 345	4·336	h m s
4 26		·321	22 6 49·0
9 7	146 261	4·470	3360″·202
11 49		·501	
Sappho and + 15°·177. (ι) (11)			
22 18 7	146 261	4·540	h m s
19 51		·520	22 24 0·3
26 21	62 345	4·096	3358″·554
31 42		3·990	

Digitized by Google

1889, September 30. AMBRONN.

Sappho and + 15°·154. (u) (12)

Sidereal Time.	Scale divisions.	Micrometer.	Mean of times. — Distance.
h m s		r	
22 9 5	51 358	2·586	h m s
12 14		·630	22 14 21·5
16 35	158 250	2·261	4302″·943
19 32		·251	

Sappho and + 15°·154. (u) (13)

Sidereal Time.	Scale divisions.	Micrometer.	Mean of times. — Distance.
h m s		r	
22 23 4	158 250	2·412	h m s
25 9		·531	22 27 6·0
28 34	51 358	2·191	4299″·591
31 37		·112	

Sappho and + 13°·175. (η) (14)

Sidereal Time.	Scale divisions.	Micrometer.	Mean of times. — Distance.
22 44 9	44 364	4·622	h m s
46 49		·570	22 50 21·8
51 47	165 243	4·189	4843″·342
58 42		·262	

Sappho and + 13°·175. (η) (15)

Sidereal Time.	Scale divisions.	Micrometer.	Mean of times. — Distance.
23 3 6	165 243	4·322	h m s
6 9		·354	23 8 31·3
10 4	44 364	4·437	4841″·745
14 46		·340	

1889, October 3. SCHUR.

Sappho and + 14°·163. (x) Screen III. (20)

Sidereal Time.	Scale divisions.	Micrometer.	Mean of times. — Distance.
h m s		r	
3 23 34	97 313	2·323	h m s
28 54		1·933	3 31 16·5
34 27	113 296	3·144	654″·585
38 11		·362	

NOTE.—Observation 20 has been rejected because no Standard Stars were observed.

I. 3; S. 3.
Standard stars not observed, because far past the meridian. Towards the end the images were always bad; finally quite clouded.

1889, October 4. SCHUR.

Sappho and + 14°·163. (x) Screen II + A. (21)

Sidereal Time.	Scale divisions.	Micrometer.	Mean of times. — Distance.
h m s		r	
21 13 14	107 303	4·094	h m s
17 37		3·798	21 22 24·3
27 47	103 306	1·347	126″·806
30 59		·260	

Sappho and + 14°·163. (x) Screen II + A. (24)

Sidereal Time.	Scale divisions.	Micrometer.	Mean of times. — Distance.
h m s		r	
22 21 46	103 306	3·101	h m s
25 53		·353	22 27 13·8
28 29	107 302	4·980	151″·368
32 47		·932	

Sappho and + 14°·163. (x) Screen II + A. (26)

Sidereal Time.	Scale divisions.	Micrometer.	Mean of times. — Distance.
3 34 17	101 309	1·298	h m s
38 36		·481	3 40 12·5
42 52	109 300	2·959	332″·881
45 5		·723	

Sappho and + 14°·163. (x) Screen II + A. (28)

Sidereal Time.	Scale divisions.	Micrometer.	Mean of times. — Distance.
4 37 35	100 309	1·243	h m s
40 18		·286	4 43 26·0
46 13	109 299	2·921	373″·809
49 38		·532	

I. 3.; S. 2.
Nos. 21, 24. Constantly disturbed by cloud: images steady. Planet placed near the star at right angles to the line of junction.
No. 26. Motion in position angle while measuring distance, 63° 42′ to 59° 17′.
4h 10m. Illumination failed, and only sufficient for the distance microscope.
4h 46m. Probably wrong wire used. [*Observation rejected.*]

Digitized by Google

Sidereal Time.	Scale divisions.	Micrometer.	Mean of times. — Distance.

1889, October 6. SCHUR.

Sappho and + 14°·163. (x) Screen II + A. (33)

h m s		r	h m s
3 39 22	77 332	4·153	3 43 58·3
43 26		·295	2241″·152
45 27	133 276	4·192	
47 38		·018	

Sappho and + 13°·150. (t) (34)

h m s		r	h m s
3 56 37	118 291	1·327	4 2 3·5
4 1 31		·474	1067″·434
4 9	92 318	2·941	
5 57		·778	

Sappho and + 13°·150. (t) (35)

			h m s
4 11 40	91 317	2·378	4 18 47·0
16 58		1·973	1055″·466
21 34	117 290	3·016	
24 56		·198	

Sappho and + 14°·163. (x) Screen II + A. (36)

			h m s
4 38 9	133 275	4·469	4 43 23·3
41 52		·300	2282″·058
44 47	76 332	4·632	
48 45		·729	

I. 2 ; S. 2.
No. 34. Observed without prism. Stars scarcely visible—cirrus cloud. At the end the sky became clearer again.

1889, October 12. SCHUR.

Sappho and + 13°·155. (w) (37)

h m s		r	h m s
5 49 55	42 366	1·538	5 56 7·3
54 17		·769	4976″·991
58 9	167 242	2·619	
6 2 8		·509	

Sappho and + 12°·108. (i) (38)

h m s		r	h m s
6 9 17	151 257	2·634	6 15 56·8
13 55		·831	3733″·060
17 20	58 351	1·334	
23 15	58 350	4·904	

I. 3 ; S. 2.
Stars at end too low and diffused—getting cloudy.

1889, October 15. SCHUR.

Sappho and + 12°·104. (f) Screen III. (39)

h m s		r	h m s
21 31 26	34 374	4·524	21 36 55·0
34 18		·660	5644″·509
39 40	175 233	4·035	
42 16		·006	

Sappho and + 11°·135. (s). Screen I. (40)

h m s		r	h m s
21 53 40	159 249	4·646	21 58 19·3
56 11		·674	4358″·122
22 0 9	50 358	4·050	
3 17		·034	

Sappho and + 11°·135. (s). Screen I. (41)

			h m s
22 20 33	50 358	4·090	22 26 6·3
23 56		·083	4358″·900
27 37	160 250	4·530	
32 19		·574	

Sappho and + 12°·104. (f). Screen III. (42)

			h m s
22 45 51	176 234	3·453	22 52 21·3
49 57		·591	5650″·118
54 11	35 375	5·169	
59 26		·250	

Digitized by Google

Sidereal Time.	Scale divisions.	Micrometer.	Mean of times. — Distance.
1889, October 15. SCHUR—*continued.*			
Sappho and + 12°·126. (v) Screen I. (43)			
h m s		r	h m s
2 36 31	36 373	2·449	2 41 49·3
39 8		·503	5505″·631
44 31	174 236	1·789	
47 7		·549	
Sappho and + 11°·102. (c) (44)			
h m s		r	h m s
2 56 38	188 221	3·542	3 1 38·0
58 47		·552	6646″·955
3 2 27	22 387	4·726	
8 40		·324	
Sappho and + 11°·102. (c) (45)			
3 19 4	22 387	3·584	3 26 15·5
22 43		·424	6631″·646
30 18	187 221	1·478	
32 57		·693	
Sappho and + 12°·126. (v) Screen I. (46)			
3 44 5	174 235	2·349	3 49 14·5
46 33		·310	5543″·091
51 14	35 373	2·488	
55 6		·768	
I. 2–3; S. 2.			
1889, October 16. SCHUR.			
Sappho and + 12°·104. (f) Screen II. (47)			
h m s		r	h m s
21 49 11	31 376	2·724	21 44 38·3
42 37		·810	5826″·636
45 42	177 231	1·840	
50 3		·724	
Sappho and + 10°·115. (r) Screen I. (48)			
h m s		r	h m s
22 1 59	178 229	4·401	22 6 23·3
4 28		·315	5920″·752
8 15	30 377	4·122	
10 51		·174	
Sappho and + 10°·115. (r) Screen I. (49)			
22 29 2	31 378	3·999	22 34 26·8
33 20		·996	5918″·245
36 23	179 230	4·712	
39 2		·700	
Sappho and + 12°·104. (f) Screen III. (50)			
22 48 47	178 231	4·640	22 53 36·3
51 15		·556	5839″·673
55 18	32 377	4·253	
59 5		·103	
Sappho and + 12°·126. (v) Screen I. (51)			
3 37 38	25 383	3·062	3 47 22·5
42 53		·236	6354″·729
51 50	184 224	4·741	
55 49		·453	
Sappho and + 11°·102. (c) (52)			
4 4 16	177 231	3·794	4 10 57·3
7 52		·863	5803″·439
13 53	32 376	4·316	
16 28		·028	
Sappho and + 11°·102. (c) (53)			
4 22 13	33 377	3·774	4 26 57·0
24 4		·664	5793″·776
28 40	178 232	5·246	
31 31		·410	
Sappho and + 12°·126. (v) Screen I. (53*a*)			
4 46 0	185 225	1·719	4 52 52·5
49 19		·439	6391″·216
56 37	25 384	3·452	
58 14		·410	

I. 3; S. 2.

No. 51. The cloud increasing: images at last diffused. Clock Denker lost 20ˢ between 20ʰ sidereal time and the following noon. From other observations the last seems to have taken place previous to 0ʰ sidereal time. The preceding clock-times must therefore probably be increased by 20ˢ, at least with some certainty after midnight. [*This correction has been applied to Nos. 51–53a in the reductions.*]

Digitized by Google

Sidereal Time.	Scale divisions.	Micrometer.	Mean of times. — Distance.	Sidereal Time.	Scale divisions.	Micrometer.	Mean of times. — Distance.
1889, October 19. SCHUR.							
Sappho and + 11°·120. (o) Screen I. (54)				Sappho and + 9°·097. (d) Screen I. (55)			
h m s		r		h m s		r	
3 4 42	60 348	4·666	h m s	3 37 27	177 230	5·037	h m s
10 41		·980	3 12 21·8	42 5		·324	3 44 17·8
16 2	149 259	3·284	3569″·001	46 43	31 375	2·852	5829″·642
18 2		·156		50 56		·664	
Sappho and + 9°·097. (d) Screen I. (56)				Sappho and + 11°·120. (o) Screen I. (57)			
3 57 24	32 377	2·178	h m s	4 30 36	150 259	2·468	h m s
59 54		·014	4 3 1·0	32 57		·401	4 35 44·0
4 6 6	178 232	3·054	5816″·821	38 5	60 350	2·571	3621″·987
8 40		·126		41 18		·657	
I. 2 ; S. 2, at beginning ; I. 3 ; S. 2, at end.							
1889, October 21. SCHUR.							
Sappho and + 11°·120. (o) Screen I. (58)				Sappho and + 9°·097. (d) Screen I. (59)			
h m s		r		h m s		r	
2 6 1	38 371	2·907	h m s	2 36 14	156 254	2·974	h m s
10 13		3·050	2 11 41·8	40 12		3·149	2 41 42·5
13 43	172 237	5·316	5350″·557	43 58	55 355	5·186	4051″·388
16 50		·089		46 26		·028	
Sappho and + 9°·097. (d) Screen I. (60)				Sappho and + 11°·120 (o) Screen I. (61)			
3 0 38	54 354	4·099	h m s	3 24 35	172 236	4·864	h m s
5 2		3·784	3 7 45·0	29 15		·602	3 34 49·5
9 4	155 253	5·097	4034″·374	40 36	37 371	4·710	5402″·141
16 16		·490		44 52		·967	
I. 3 ; S. 2. Foggy ; pointings troublesome.							
1889, October 26. SCHUR.							
Sappho and + 9°·097. (d) Screen I. (62)				Sappho and + 9°·101. (g) (63)			
h m		r		h m s		r	
22 22 10	94 313	4·109	h m s	22 50 59	131 277	1·836	h m s
25 20		·181	22 26 20·5	54 55		·900	22 56 43·5
27 43	114 293	4·439	798″·846	59 4	77 330	2·633	2144″·167
30 9		·373		23 1 56	78 331	·561	

Digitized by Google

Sidereal Time.	Scale divisions.	Micrometer.	Mean of times. — Distance.	Sidereal Time.	Scale divisions.	Micrometer.	Mean of times. — Distance.
1889, October 26. SCHUR—*continued*.							
Sappho and + 9°·101. (g) (64)				Sappho and + 9°·097. (d) Screen I. (65)			
h m s				h m s			
23 9 39	78 331	2·370	h m s	23 31 34	115 294	3·632	h m s
12 26		·315	23 14 30·0	35 34		·531	23 38 59·8
16 15	131 277	2·244	2140″·565	42 16	95 314	5·248	808″·291
19 40		·432		46 35		·192	
I. 3; S. 2. At the beginning a stormy north-east wind, so that the observing chair was shaken; at the end completely calm. Stars often disappeared in mist; finally quite clouded.							
1889, October 27. SCHUR.							
Sappho and + 9°·090. (b) Screen I. (66)				Sappho and + 9°·101. (g) (67)			
h m s				h m s			
23 20 47	76 334	2·153	h m s	23 46 5	130 280	2·420	h m s
26 5		1·933	23 28 40·3	50 20		·360	23 52 1·0
32 8	134 275	2·504	2338″·288	54 59	80 329	2·240	1979″·375
35 41		·507		56 40		·124	
I. 3; S. 2. Constantly interrupted by mist and cloud. Observations made without the prism							

Digitized by Google

GÖTTINGEN HELIOMETER OBSERVATIONS OF SAPPHO.—POSITION ANGLES.

Observer—DR. SCHUR.

Sidereal Time.	Microscope I. Circle.	Microscope I. Index.	Microscope II. Circle.	Microscope II. Index.	Mean of Times and Circle Readings.
1889, OCTOBER 3.					
Sappho and + 14°·163. (x) Screen III. (16)					
h m s	′ ″	′ ″	′ ″	′ ″	
23 17 45	7 18·9	9 35	7 18·2	8 48	h m s
25 50	1 1·9	9 42	1 5·2	8 47	23 28 28·5
33 9	7 23·9	9 37	7 17·7	8 49	° ′ ″
37 10	4 10·9	9 38	4 9·2	8 48	211 55 42
Sappho and + 14°·169. (y) Screen II. (17)					
h m s	′ ″	′ ″	′ ″	′ ″	
0 36 41	4 56·4	9 46	4 26·2	8 36	h m s
40 16	8 4·9	9 52	7 24·2	8 38	0 43 0·8
45 45	6 3·9	9 46	5 27·2	8 44	° ′ ″
49 21	6 21·9	9 46	5 45·7	8 42	199 49 16
Sappho and + 14°·169. (y) Screen II. (18)					
1 6 42	9 49·9	9 55	7 58·7	8 42	h m s
11 17	6 22·9	9 54	4 38·2	8 36	1 13 23·0
15 50	8 43·9	9 56	7 7·2	8 37	° ′ ″
19 43	5 2·9	9 55	3 14·7	8 33	20 17 17
Sappho and + 14°·163. (x) Screen III. (19)					
1 33 48	6 40·9	9 52	4 47·7	8 36	h m s
37 58	1 2·4	9 57	9 3·2	8 34	1 40 29·8
42 37	5 3·9	0 0	2 58·2	8 33	° ′ ″
47 36	9 17·9	0 1	7 13·7	8 31	30 42 42

I. 2; S. 2. Axis following.

Sidereal Time.	Microscope I. Circle.	Microscope I. Index.	Microscope II. Circle.	Microscope II. Index.	Mean of Times and Circle Readings.
1889, OCTOBER 4.					
Sappho and + 14°·163. (x) Screens II. and A. (22)					
h m s	′ ″	′ ″	′ ″	′ ″	
21 34 17	1 32·9	9 24	0 31·2	8 8	h m s
37 43	0 8·9	9 22	9 6·2	8 8	21 42 26·8
47 28	6 49·9	9 24	5 39·2	8 9	° ′ ″
50 19	5 39·9	9 24	4 35·2	8 8	99 19 12
Sappho and + 14°·163. (x) Screens II. and A. (23)					
h m s	′ ″	′ ″	′ ″	′ ″	
21 56 59	8 54·9	9 24	8 33·2	8 4	h m s
22 1 33	4 55·4	9 24	4 32·7	8 6	22 5 57·5
9 23	4 0·9	9 26	3 38·2	8 4	° ′ ″
15 55	4 9·9	9 29	3 43·7	8 3	273 41 30
Standard Stars. (25)					
23 22·8	4 42·9	9 36	3 56·2	8 0	h m
	4 50·9	9 34	4 2·2	7 56	23 29·3
	6 51·9	9 34	6 3·2	8 2	° ′ ″
35·8	6 39·4	9 37	5 52·2	7 56	239 16 32
Standard Stars. (25a)					
23 40·8	6 6·9	9 32	3 59·2	7 57	h m
	7 22·9	9 36	5 22·2	7 56	23 45·8
	7 22·9	9 34	5 18·2	7 56	° ′ ″
50·8	7 31·9	9 34	5 26·2	7 54	59 17 15
Sappho and + 14°·163. (x) Screens II and A. (27)					
3 50 43	5 54·9	9 35	3 59·7	8 3	h m s
54 42	9 39·4	9 28	7 52·2	8 4	3 57 5·8
59 20	3 1·9	9 33	1 12·7	8 0	° ′ ″
4 3 38	5 44·4	9 30	3 55·2	8 7	60 43 50

I. 3; S. 2. Constant interruptions from cloud in the evening.
In observations 22, 23, 25, and 25*a*, axis following. In 27, axis preceding.

Digitized by Google

Sidereal Time.	Microscope I.		Microscope II.		Mean of Times and Circle Readings.	Sidereal Time.	Microscope I.		Microscope II.		Mean of Times and Circle Readings.
	Circle.	Index.	Circle.	Index.			Circle.	Index.	Circle.	Index.	
					1889, October 6.						
Sappho and + 14°·163. (x) Screens II. and A. (29)						Sappho and + 13°·150. (t) (30)					
h m s	′ ″	′	′ ″	′ ″	h m s	h m s	′ ″	′ ″	′ ″	′ ″	h m s
21 38 8	7 13·9	9 24	6 39·7	7 46	21 46 36·3	22 4 47	7 58·4	9 24	7 20·7	7 50	22 11 49·8
43 21	6 41·9	9 28	6 9·7	7 53	o ′ ″	9 24	6 2·4	9 33	5 20·2	7 53	o ′ ″
50 56	4 27·4	9 24	3 52·7	7 53	223 1 43	14 8	4 3·9	9 28	3 22·2	7 44	218 21 11
54 0	4 23·9	9 28	3 51·7	7 50		19 0	2 46·4	9 25	2 5·2	7 47	
Sappho and + 13°·150 (t) (31)						Sappho and + 14°·163. (x) Screens II. and A. (32)					
22 27 48	6 57·9	9 24	4 58·7	7 47	h m s	22 47 50	2 0·9	9 28	9 52·2	7 46	h m s
31 18	5 57·4	9 24	3 59·7	7 47	22 33 31·3	51 32	2 13·4	9 27	0 21·2	7 46	22 54 35·0
35 51	1 20·9	9 24	9 26·2	7 48	o ′ ″	57 45	9 43·9	9 28	7 41·2	7 50	o ′ ″
39 8	0 41·9	9 28	8 51·7	7 46	38 19 8	1 13	7 54·9	9 24	5 53·2	7 42	43 0 49

I. 2; S 2. Axis preceding.

Digitized by Google

OBSERVATIONS OF BAROMETER AND THERMOMETERS.—GÖTTINGEN.

Date, 1889.	Sidereal time.	Barometer reduced to 0°.	Thermometer Readings °C.			
			External.	Scale.	Eye End.	Attached to Pillar.
	h m	m	°	°	°	°
Sept. 18	21 5	752·0	9·7	9·6	8·5	4·9
	22 14	751·9	7·8	8·6	6·4	3·8
	2 18	751·2	...	...	...	2·0
	2 36	...	4·6	4·8	4·5	...
	3 47	...	3·9	5·3	4·3	...
	4 48	...	3·6	4·9	3·4	...
	4 58	750·2	...	...	...	1·3
Sept. 23	21 15	744·5	...	...	...	5·3
	21 50	...	7·7	8·8	6·7	...
	22 40	743·8	7·2	8·5	7·1	4·8
Sept. 30	22 10	739·1	10·3	10·5	9·4	...
	23 25	739·6	8·9	10·1	8·9	6·8
Oct. 3	22 43	744·3	...	...	...	8·0
	22 49	...	9·6	9·7	9·4	...
	23 44	...	...	9·8	9·1	...
	0 52	...	...	9·2	8·5	...
	1 52	...	8·1	8·9	8·2	...
	2 4	744·6	...	...	...	7·2
	3 4	..	...	...	...	7·2
	3 7	...	7·9	8·5	8·3	...
	3 56	...	8·3	9·2	8·8	...
	4 10	744·7	...	...	...	7·9
Oct. 4	20 40	745·7	...	...	...	11·0
	20 46	...	12·6	12·9	12·9	...
	22 35	...	11·5	12·7	11·5	...
	23 54	..	10·5	11·5	10·1	...
	0 24	...	10·1	11·3	10·1	...
	0 35	745·5	...	...	...	6·3
	3 7	745·2	...	...	...	6·3
	3 14	...	8·5	9·1	8·9	...
	4 52	...	7·8	8·9	7·8	...
	5 6	745·0	...	...	...	5·0
Oct 6	21 10	746·4	...	...	...	7·0
	21 17	...	11·1	10·5	10·1	...
	22 21	...	9·5	10·7	9·2	...
	23 4	...	9·0	10·7	9·1	...
	23 36	...	8·6	9·5	8·2	...
	23 55	746·2	...	...	...	5·6
	3 16	745·1	...	...	...	4·8
	3 28	...	6·9	7·3	7·3	...
	4 53	..	6·5	7·8	6·9	...
	5 0	744·3	...	...	...	3·8
Oct. 12	3 53	744·0	...	...	...	6·7
	4 0	...	8·0	8·2	8·0	...
	5 34	...	...	8·5	7·9	...

Date, 1889.	Sidereal time.	Barometer reduced to 0°.	Thermometer Readings °C.			
			External.	Scale.	Eye End.	Attached to Pillar.
	h m	m	°	°	°	°
Oct. 12	6 28	...	7·3	8·4	7·3	...
	6 34	743·5	...	...	...	4·6
Oct. 15	20 4	750·2	...	...	...	6·3
	20 10	...	10·5	10·6	9·7	...
	21 5	...	9·3	10·2	8·7	...
	22 13	...	8·0	8·8	7·4	...
	23 2	...	7·2	8·9	7·1	...
	23 10	750·8	...	...	...	4·2
	2 20	751·0	...	...	...	2·7
	2 30	...	4·8	5·5	5·0	...
	3 14	...	4·6	6·1	4·9	...
	3 58	...	4·3	5·6	3·9	...
	4 8	750·8	...	...	...	2·0
Oct. 16	19 30	748·7	...	...	...	8·0
	19 35	...	10·3	10·2	9·9	...
	21 15	747·5	...	...	...	7·3
	21 22	...	8·9	9·4	9·1	...
	22 18	...	8·6	9·5	8·7	...
	23 4	...	8·3	9·1	8·2	...
	23 14	748·5	...	...	...	6·6
	0 30	...	...	...	7·9	...
	1 51	...	...	...	7·7	...
	2 31	747·8	...	...	...	5·8
	3 25	...	6·9	7·4	7·0	...
	5 2	...	6·3	7·6	6·5	...
	5 9	747·1	...	...	...	5·0
Oct. 19	0 52	738·8	...	...	...	7·3
	1 0	...	8·9	8·9	9·1	...
	2 52	...	8·1	9·2	8·2	...
	4 48	...	7·5	8·9	7·7	...
	5 2	738·9	...	...	...	5·6
Oct. 21	1 31	733·8	...	...	...	6·0
	1 37	...	8·8	8·9	8·7	...
	2 52	...	7·5	8·8	7·1	...
	3 50	...	6·9	8·0	6·7	...
	4 2	734·1	...	...	...	3·9
Oct. 26	21 50	753·4	...	...	...	2·2
	22 0	...	2·6	2·9	2·6	...
	23 52	...	2·8	4·6	3·1	...
	0 33	753·9	...	...	...	3·3
Oct. 27	22 14	747·2	...	...	...	3·2
	22 31	...	4·7	5·1	4·5	...
	0 6	...	3·9	5·5	3·9	...
	0 12	746·4	...	...	...	2·8

Digitized by Google

BAMBERG

OBSERVATIONS OF SAPPHO

IN

1889.

Digitized by Google

BAMBERG HELIOMETER OBSERVATIONS OF SAPPHO.—DISTANCES.

Observer—DR. HARTWIG.

Time by Chronometer.	Scale A.	Scale B.	Microscope.	Sidereal Time. — Distance.
1889, OCTOBER 3.				
Sappho and + 14°·163. (x) Screen III. (1–2)				
h m s				
14 25 16	112·8	296·0	3·690	
			4·201	
30 24			3·310	
			·813	h m s 3 20 50 665″·517
36 48	95·5	312·0	2·138	
			·638	
40 17			·390	
			·893	
Sappho and + 14°·169. (y) Screen III. (3–4)				
h m s				
14 49 49	90·6	318	2·693	
			3·198	
53 24			2·467	
			·967	h m 3 43 45 1101″·137
57 47	117·6	290	2·894	
			3·380	
15 3 11			·182	
			·677	
Rotated prism 90°.				
Sappho and + 14°·169. (y) (5–6)				
15 16 43	117·99	290	4·078	
			·564	
22 24	118·1	290	·348	
			·852	h m s 4 12 52 1119″·540
28 4	89·99	318	4·232	
			·734	
33 5			3·920	
			4·411	
Sappho and + 14°·163. (x) (7–8)				
15 42 19	95·6	311	2·480	
			·977	
47 2			·846	
			3·359	m 4 37 14 614″·661
52 1	111·4	296	1·852	
			2·359	
56 6			1·587	
			2·092	

Focal point 29·0. Axis preceding. I. 2; S. 2.
15h 10m Rotated 180° in position-angle.
Motion in position-angle in passing stars through 1° 20′ on average. No. 7–8 diffused.

Temperature of Tube at h m 14 15 = 6°·5 Réaum.
" " 16 3 = 6·3 "

h m s 13 3 10 by Chronometer = h m s 1 50 35·2 Sidereal time.
16 41 55 " = 5 29 56·0 "

Time by Chronometer.	Scale A.	Scale B.	Microscope.	Sidereal Time. — Distance.
1889, OCTOBER 4.				
Sappho and + 14°·163. (x) (11–12)				
h m s				
15 36 37	99·1	308	4·383	
			·892	
44 30	98·9	308	3·898	
			4·389	h m s 4 37 12 366″·686
48 15	103·4	299	1·403	
			1·918	
52 18			·692	
			2·196	
Rotated prism 90°.				
Sappho and + 14°·163. (x) (13–14)				
h m s				
15 58 45	108·5	299	2·122	
			·627	
16 3 20			·354	
			·858	h m 4 58 6
9 45	98·5	308	2·253	379″·935
			·745	
13 10			·095	
			·612	

Focal point 29·0. Axis preceding. I. 3; S. 3.
15h 55m Rotated 180° in position-angle.
Motion in position-angle as on October 3.

Temperature of Tube at h m 15 4 = 7°·9 Réaum.
" " 16 36 = 6·5 "

h m s 14 32 25 by Chronometer = h m s 3 24 0·5 Sidereal time.
16 49 54·5 " = 5 41 52·4 "

Digitized by Google

Time by Chronometer.	Scale A.	Scale B.	Microscope.	Sidereal Time. — Distance.
			1889, October 19.	
	Sappho and + 11°·120. (o)			(17–18)
h m s				
13 56 28	59·3	349·0	1·169	
			1·671	
14 5 34	59·2	349·0	0·641	
			1·143	h m s 3 57 40
10 32	149·2	259·0	0·753	3596″·670
			1·258	
			·194	
16 26			·689	
	Sappho and + 9°·097. (d)			(19–20)
h m s				
14 23 0	176·6	231·0	2·468	
			·977	
27 15			·157	
			·643	h m s 4 20 13
32 20	31·7	377·0	3·238	5808″·592
			·736	
36 20			·575	
			4·083	
	Sappho and + 9°·097. (d)			(21–22)
14 42 2	30·9	376·0	3·993	
			4·493	
47 22			4·383	
			·894	h m s 4 41 6
53 50	176·1	231·0	4·288	5793″·571
			·799	
59 4			3·880	
			4·378	
	Sappho and + 11°·120. (o)			(23–24)
15 6 39	148·99	258·0	4·298	
			·782	
10 2			·446	
			·956	h m s 5 3 11
15 20	57·99	349·0	4·316	3637″·197
			·824	
18 19			·052	
			·565	

Focal point 29·0. I. 3–4 ; S. 3, for first two sets : I. 2–3 ; S. 2–3, for third : and I. 1 ; S. 2–3, for last.
$14^h\ 40^m$ Rotated 180° in position-angle.

Temperature of Tube at 13 h 5 m = 7°·3 Réaum. 12 h 11 m 5 s by Chronometer = 2 h 1 m 11·7 s Sidereal time.
" " 15 25 = 6·5 " 15 44 24 " = 5 35 5·6 "

Digitized by Google

BAMBERG HELIOMETER OBSERVATIONS OF SAPPHO—POSITION ANGLES.

Observer—DR. HARTWIG.

Time by Chrono-meter.	Circle I.	Micr. I.	Index.	Circle II.	Micr. II.	Index.	Sidereal Time. — Circle Readings.	Time by Chrono-meter.	Circle I.	Micr. I.	Index.	Circle II.	Micr. II.	Index.	Sidereal Time. — Circle Readings.
1889, OCTOBER 4.															
Sappho and + 14°·163. (x)							(9–10)	Sappho and + 14°·163. (x)							(15–16)
h m s	° ′	′ ″	′ ″	° ′	′ ″	′ ″		h m s	° ′	′ ″	′ ″	° ′	′ ″	′ ″	
15 5 2	151 5	6 4	1 7	331 9	5 4	5 31		16 17 10	328 41	2 3	1 8	148 46	1 0	5 29	
		6 6	1 3		5 10	5 30				2 6	1 6		1 2	5 29	
13 43	150 37	8 30	1 2	330 42	7 30	5 30		22 5	328 37	7 28	1 3	148 41	6 22	5 32	
		8 32	1 6		7 31	5 31	h m s			7 29	1 7		6 22	5 30	h m s
21 58	150 36	7 0	1 7	330 41	5 59	5 29	4 9 19	26 35	328 9	0 22	1 4	148 14	9 13	5 29	5 16 14
		7 0	1 7		5 59	5 32	° ′ ″			0 27	1 5		9 16	5 29	° ′ ″
29 41	150 17	7 19	1 6	330 21	6 17	5 33	150 40 55·0	31 30	327 59	0 15	1 4	148 4	9 8	5 30	148 23 42·3
		7 17	1 9		6 20	5 33				0 18	1 4		9 10	5 28	

Focal point, temperature, &c. as for "Distances."
I 3; S 2–3.

Run for position circle observations, I. + 1″·8; II. + 2″·1.
No correction for Run is applied in distance, none apparently necessary. Micrometrical equivalent of 1ᵖ from the mean of all the observations being = 4ʳ·0028.
No readings of barometer and external thermometer were taken. The following data are supplied from the observations of the Meteorological Observatory at Bamberg.

Date.		Barometer 0°.	Thermometer.	Minimum of temperature during following night.
d	h	mm	°	°
October 3,	8	734·8	9·5 C.	7·3 C.
4,	8	734·9	8·8	4·9
19,	8	728·2	7·9	2·0

Digitized by Google

OBSERVATIONS OF IRIS

IN

1888.

Digitized by Google

Digitized by Google

OBSERVATIONS OF IRIS.

CAPE OBSERVATIONS.

The instrument and the methods of observation are identical with those employed in the observations of *Victoria* and *Sappho*; a full description will be found in the Introduction to the present volume.

The arrangement of the pointings is the "original plan" described at page 59 (*loc. cit.*), the various readings are tabulated precisely on the same plan as those of *Victoria* and *Sappho*.

The observations of distance were corrected for Run and for errors of the Scale and Screw and reduced to arc with the same mean screw value as those of *Victoria* and *Sappho*; the instrumental readings of the position-angles were also corrected for Run and reduced to the mean value for the four pointings of each observation; the results were communicated to Dr. Elkin in the form in which they are now printed.

DAVID GILL.

YALE OBSERVATIONS.

The Yale Heliometer Observations of Iris and comparison stars were made with a power of 210, using the reversing-prism eye-piece, which was reversed between each two successive pointings. The direction of last motion of the handles was such as to secure an apparent reversal of direction of approach of the two star images.

The times were called out by the observer with the heliometer and recorded by an assistant, who also noted the scale-division and position-circle readings as given by the observer. The micrometer readings of the scales were printed on the registering apparatus.

The observations as called out, recorded, or imprinted, are given on the following pages. Beside the date of each observation is given the position of the instrument, telescope East or West. The first column contains the B.D. number of the star compared with Iris, or the word "Standards," referring to the stars η and θ Arietis. In

Digitized by Google

the second column are given the chronometer times as recorded by the assistant. For the planet observations a chronometer running on mean time was used, and its correction to Yale Observatory mean time is given at the end of the observations for each day. For the "Standards" a sidereal chronometer was employed which was regulated to within a few seconds of local sidereal time. The third column, headed "Micr.," contains the micrometer readings as read off from the registering fillet, or the minutes and seconds of the position-circle microscopes as dictated by the observer. For the planet observations the position of the position-circle indices was estimated to half-tenths of minutes in each microscope. For the "Standards" the micrometers reading to seconds were used, and for these the first figures refer to the circle division, the second to the index; and the following line gives the readings for the second microscope. The fourth column contains the means of the times and the micrometer readings, the whole number of divisions for the scales and the degrees and decades of minutes for the circles being inferred from the data called out by the observer. These are, therefore, the apparent results of the observations without any correction for instrumental or other error. There are a few cases where more than the regular number (four) of pointings were made, or where the micrometer pointing was neglected. The grouping of these measures to eliminate the index-error of the scales is indicated by brackets. At the end of the observations for each day are given the thermometer and barometer readings for the beginning and end of the observation, the chronometer correction, and the run of the scale-micrometer.

All the measures were made by the two observers Elkin and Hall, and their results are kept separate, as most of the latter's observations were made on other stars than those observed at the other Observatories. In Dr. Hall's series the definition is indicated on a scale of 1 to 4, 1 being the best and 4 the worst general quality of the seeing.

W. L. ELKIN.

LEIPZIG OBSERVATIONS.

The observations throughout were made with bright field.

The eye-piece, provided with a screw adjustment, was accurately pointed, before observing began, on the cross-wires (⌗) in the eye-piece tube. The position of the cross-wires will then coincide, within $0{\cdot}2^{mm}$, with the position of the focal point corresponding to the temperature at the time. The data necessary for reduction to the normal position of the eye-piece and for the reduction of the distance to the normal conditions will be found at the end. During the same evening the reading of the eye-piece scale was not changed.

Digitized by Google

The reversion-prism, which was also inverted for the determinations of the focus, was employed throughout in the manner proposed by Mr. Gill.

The time, given by a signal from the observer, was noted accurately to $0^s.5$ by an assistant employing a half-second box chronometer. In applying the clock-error, account was, of course, taken of the rate; immediately before and after observing, the chronometer was compared from the observing-room with the normal clock by chronograph. Only one division on each of the two scales was bisected. The very trifling run has been applied to the observations; its influence vanishes completely from the mean of the four pointings belonging to the measure of a distance. Periodic errors of the screw could not be detected, and the same was the case with the position-circle microscopes. Errors of division have not been applied to the distances, as the investigations on this point have not been completed yet.

In the formation of the distances it has been assumed that division 190 on scale A coincides with 590 on scale B when images are in coincidence; in the separate distances no account is taken of the true coincidence point.

In reading position-angles the index and the two adjacent divisions were bisected in each microscope.

In the copy of the observations will be found—

1. The position of the axis of the telescope (Axis preceding A.*v.*, or Axis following A.*f.*)

2. The correct Leipzig sidereal time of observation.

3. The distance of the two objects, or the reading of the position-circle.

4. The approximate figures of the P-reading in a measure of distance, or the approximate set of the scales in a measure of position-angle.

5. The figures of the steadiness (R) and sharpness (S) of the images. 1 denotes particularly steady and sharp images; 4 denotes a condition in which the images were so unsteady or so diffused that measures could only be obtained with excessive difficulty.

6. The meteorological data—mean of the readings of the two thermometers at the object-glass end (τ_0) and the reading of the thermometer showing the (τ_2) temperature of the air, which is suspended freely in the dome—are given at the end of the observations. All temperatures are expressed in the Centigrade scale. The barometer readings are taken from a barograph and reduced to 0° C.

Digitized by Google

It should be specially mentioned that great care was taken to avoid lowering the objective more than was necessary, and that even in reversing the telescope it was never brought to a horizontal position.

For the control of the adjustment of the instrument one pole star and one time star were always observed near the meridian in both positions of the instrument, and in each position at position-angles differing by 180. At the same position-angle (P) two observations were always made, whose mean refers to the middle point of the square.

D denotes the reading of the declination circle.
T ,, ,, hour ,,
always referred to the same microscope. The numbers on the circles increase with direct revolution of a given axis if the observer is placed

For the T circle on the side of the south pole.
,, D ,, ,, telescope.
,, P ,, ,, eye-piece.

The readings of the eye-piece scale decrease as the cross-wires are brought nearer to the objective.

If τ_0 denote the mean of the readings of the two thermometers at the objective, then the *correct* focal reading for temperature τ_0 is

$$10{\cdot}005 + 0{\cdot}0134\ \tau_0$$

If a distance Δ has been measured at a reading of the eye-piece scale O, and if the correct position of the wires is at the reading N, the correction to be applied to Δ is

$$-0^{p}{\cdot}00491\ (O-N)\ \Delta$$

if the unit for Δ is 100^{p} and for $O-N$ $0^{mm}{\cdot}10$.

B. PETER.

RADCLIFFE OBSERVATIONS.

These observations were made with the Radcliffe Heliometer by Mr. E. J. Stone, Radcliffe Observer. The settings and position-circle readings were made by Mr. W. Wickham, except on November 13, when the settings, &c., were made by Mr. W. H. Robinson.

The observations have been forwarded to us in complete detail by Mr. Stone in the form in which they are here printed, but with no further description of the methods employed.

A description of the Heliometer will be found in Volume XI of the annual publications of the Radcliffe Observatory.

Digitized by Google

CAPE

OBSERVATIONS OF IRIS

IN

1888.

Digitized by Google

CAPE OBSERVATIONS OF IRIS.

1888, October 12. GILL.

Standard Stars. (1)

Chronometer Time.	Readings of Scale or Position Circle.	Cape Sid. Time. — Distance or Position Angle.
h m s	r	h m s
3 47 1	181 219 4·021	3 58 35·6
49 1	·047	
4 9 22	19 382 3·805	″
11 56	·846	6514·360

Iris and fainter component of D. M. + 24°·376. (2)

Chronometer Time.	Readings of Scale or Position Circle.	Cape Sid. Time. — Distance or Position Angle.
h m s	r	h m s
4 23 6	90 310 2·757	4 24 33·1
24 10	·761	
26 8	109 290 5·198	″
27 46	·140	769·754

Iris and brighter component of D. M. + 24°·376. (3)

Chronometer Time.	Readings of Scale or Position Circle.	Cape Sid. Time. — Distance or Position Angle.
h m s	r	h m s
4 28 54	109 291 2·618	4 31 20·4
31 5	·600	
33 22	90 309 5·334	″
34 58	·416	755·681

Observations stopped by cloud. I. 2–3; S. 3.
Run + 0ʳ·0081. Chronometer Slow — 44ˢ·4.

	h m	B in.	t °	T °
At	4 40	30·23	52·9	52·0

1888, October 13. FINLAY.

Standard Stars. (4)

Chronometer Time.	Readings of Scale or Position Circle.		Cape Sid. Time. — Distance or Position Angle.
h m s	′ ″	′ ″ ° ′	h m s
3 48 0	0 21	4 0 136 30	4 54 30·5
	0 44	4 12	
53 0	0 25	3 43	° ′ ″
	0 45	3 48	136 31 42
58 0	0 20	10 30 136 20	
	0 42	10 36	
4 2 0	0 25	10 31	
	0 40	10 33	

Standard Stars. (5)

Chronometer Time.	Readings of Scale or Position Circle.	Cape Sid. Time. — Distance or Position Angle.
h m s	r	h m s
4 16 18	19 382 3·840	4 22 17·5
18 54	·779	″
26 28	181 219 4·264	6512·953
30 28	·330	

Iris and D. M. + 24°·376.(1) (6)

Chronometer Time.	Readings of Scale or Position Circle.	Cape Sid. Time. — Distance or Position Angle.
h m s	r	h m s
4 40 50	112 288 3·093	4 43 41·0
43 35	·035	″
45 42	87 312 4·914	991·732
47 35	·975	

Iris and D. M. + 24°·376.(1) (7)

Chronometer Time.		Readings of Scale or Position Circle.		Cape Sid. Time. — Distance or Position Angle.
h m s	′ ″	′ ″	° ′	h m s
4 50 1	0 26	3 40	193 0	4 55 27·5
	0 40	3 36		° ′ ″
4 54 9	0 25	9 24	193 0	193 22 50
	0 33	9 19		
4 58 26	0 26	8 33	193 30	
	0 34	8 21		
5 2 12	0 28	1 57	193 40	
	0 34	1 44		

I. 2; S. 2–3.
(1) The star 24°·376 is double: the observer did not note which component was observed.
Run + 0ʳ·0163.
Run for Position-Angle + 2″ in 10′ Chronometer Slow — 44ˢ·5.

	h m	B in.	t °	T °
At	3 40	30·12	56·6	56·1
	5·10	30·11	56·1	55·7

Digitized by Google

Chronometer Time.	Readings of Scale or Position Circle.	Cape Sid. Time. — Distance or Position Angle.	Chronometer Time.	Readings of Scale or Position Circle.	Cape Sid. Time. — Distance or Position Angle.
		1888, October 14. GILL.			
	Iris and D. M. + 24°·369. (8)			Iris and D. M. + 22°·375. (9)	
h m s	r	h m s	h m s	r	h m s
3 34 57	130 270 5·851	3 38 6·4	3 49 8	44 356 5·056	3 56 16·9
37 54	·870		53 48	4·990	
40 4	70 331 1·973	″	59 54	156 245 2·903	″
42 31	2·022	2406·241	4 5 30	2·911	4481·119
	Iris and D. M. + 22°·375. (10)			Iris and D. M. + 24°·369. (11)	
4 7 20	156 245 2·949	h m s	4 21 37	70 331 1·909	h m s
9 58	3·049	4 10 5·9	23 45	·840	4 25 4·7
12 23	44 356 4·908	″	27 43	130 271 2·085	″
13 43	·810	4479·834	30 14	·130	2404·447
	Iris and D. M. + 24°·369. (12)			Iris and D. M. + 22°·375. (13)	
4 32 45	130 271 2·110	h m s	4 44 57	44 356 4·505	h m s
34 25	·207	4 34 37·4	46 52	·620	4 47 20·9
36 8	70 330 5·737	″	49 27	156 245 3·380	″
38 12	·740	2403·567	51 8	·502	4476·125
	Iris and D. M. + 22°·375. (14)			Iris and D. M. + 24°·369. (15)	
4 52 38	156 245 3·474	h m s	5 0 12	70 330 5·610	h m s
53 34	·476	4 53 41·4	3 13	·590	5 4 39·4
54 59	44 356 4·360	″	8 28	130 271 2·398	″
56 35	·472	4475·216	9 45	·355	2401·772

I. 4; S. 3–4. Bisections could only be made by momentary glimpses.
The two stars, when in the field together, about 10″ apart, presented the appearance of the Dumb-bell Nebula. The worst species of South Easter definition.
Run + 0ᵐ·0102.

Chronometer Slow — 45ᵐ·1.

	B	t	T
h m	in.	°	°
At 3 30	30·18	59·0	59·0
5 15	30·13	58·5	58·0

		1888, October 15. FINLAY.			
	Iris and D. M. + 22°·372. (16)			Iris and D. M. + 24°·358. (17)	
h m s	r	h m s	h m s	r	h m s
3 31 8	154 245 5·147	3 39 5·3	4 34 52	33 368 3·609	4 40 3·5
33 51	·059		40 34	·617	
46 32	45 355 2·850	″	43 3	167 233 4·541	″
47 50	·756	4378·732	44 45	·594	5387·846

Digitized by Google

Chronometer Time.	Readings of Scale or Position Circle.	Cape Sid. Time. — Distance or Position Angle.	Chronometer Time.	Readings of Scale or Position Circle.	Cape Sid. Time. — Distance or Position Angle.
		1888, October 15. FINLAY (*continued*).			
	Iris and D. M. + 24°·358. (18)			Iris and D. M. + 22°·372. (19)	
h m s	r	h m s	h m	r	h m s
4 46 12	167 233 4·609	4 49 15·5	5 0 1	45 354 5·759	5 3 34·5
47 18	·592	"	3 0	·560	'
51 17	33 368 3·323	5385·909	5 31	154 246 2·260	4366·796
55 15	·197		8 46	·449	

		B	t	T
	h m	in.	°	°
I. 3–4 and 4 ; S. 3–4.	At 3 25	29·99	61·4	61·4
Run + 0ᵐ·0093.	5 10	29·97	62·0	61·9

Observations were much hindered by cloud, middle observations best, excessively bad towards the end.
Chronometer Slow — 45ˢ·0.

1888, October 21. FINLAY.

	Iris and D. M. + 23°·326. (20)			Iris and D. M. + 22°·368. (21)	
h m s	r	h m s	h m s	r	h m s
3 9 39	152 249 3·044	3 14 11·0	3 21 42	52 348 4·338	3 24 26·2
14 28	2·989		24 17	·465	'
17 0	48 352 5·009	4159·751	26 41	148 253 3·583	3833·136
18 24	4·982		27 52	·595	

	Iris and D. M. + 22°·368. (22)			Iris and D. M. + 23°·326. (23)	
h m s	r	h m s	h m s	r	h m s
3 30 33	148 253 3·524	3 32 12·5	3 39 31	48 352 4·713	3 41 7·0
31 54	·479	'	40 26	·741	'
33 43	52 348 4·463	3834·333	42 22	152 249 3·277	4156·880
35 27	·642		44 56	·360	

1888, October 21. GILL.

	Iris and D. M. + 23°·326. (24)			Iris and D. M. + 22°·358. (25)	
h m s	r	h m s	h m s	r	h m s
3 49 19	152 249 3·352	3 52 56·2	4 1 32	52 348 4·950	4 4 20·5
52 20	·330	'	3 34	·960	'
55 16	48 352 4·599	4156·281	6 52	148 253 3·020	3838·858
57 37	·661		8 11	2·987	

	Iris and D. M. + 22°·368. (26)			Iris and D. M. + 23°·326. (27)	
h m s	r	h m s	h m s	r	h m s
4 11 27	148 253 2·948	4 13 39·7	4 22 34	48 352 4·389	4 26 44·0
13 36	·923	'	25 23	·347	'
15 33	52 348 5·119	3840·073	29 42	152 249 3·667	4153·440
16 50	·139		32 4	·620	

Digitized by Google

1888, October 21. GILL (*continued*).

Iris and D. M. + 23°·326. (28)

Chronometer Time.	Readings of Scale or Position Circle.	Cape Sid. Time. — Distance or Position Angle.
h m s	r	h m s
4 33 8	152 249 3·650	4 36 47·2
35 19	·650	
39 18	48 352 4·227	″
42 11	·170	4152·561

Iris and D. M. + 22°·368. (29)

Chronometer Time.	Readings of Scale or Position Circle.	Cape Sid. Time. — Distance or Position Angle.
h m s	r	h m s
4 47 19	52 348 5·500	4 49 56·0
49 42	·520	
52 5	148 253 2·507	″
53 25	·445	3844·300

Iris and D. M. + 22°·368. (30)

Chronometer Time.	Readings of Scale or Position Circle.	Cape Sid. Time. — Distance or Position Angle.
h m s		h m s
4 55 1	148 253 2·460	4 59 50·7
56 44	·437	
5 3 28	52 348 5·655	″
6 57	·730	3845·360

Iris and D. M. + 23°·326. (31)

Chronometer Time.	Readings of Scale or Position Circle.	Cape Sid. Time. — Distance or Position Angle.
h m s		h m s
5 10 56	48 352 3·733	5 15 16·7
14 42	·813	
17 17	152 249 4·251	″
20 59	·388	4147·053

For 20-23 I. 1-2 ; S. 2
24-27 1-2 ; 2-3
28-31 2-3 ; 3
Run + 0ʳ·0124.

Chronometer Slow — 41ˢ·8

	B	t	T
h m	in.	°	°
At 3 29	30·20	53·0	49·0
4 10	30·19	52·0	47·1
4 54	30·19	50·7	46·9

1888, October 22. GILL.

Standard Stars. (32)

Chronometer Time.				Cape Sid. Time. — Distance or Position Angle.
h m s	′ ″	′ ″	° ′	
3 1 45	0 25	4 9	136 30	
	0 29	3 59		
7 28	0 28	3 57	136 30	h m s
	0 23	3 53		3 8 41·3
12 6	0 25	0 30	136 30	° ′ ″
	0 27	0 18		136 31 42
16 11	0 25	0 15	136 30	
	0 24	0 4		

Standard Stars. (33)

Chronometer Time.	Readings of Scale or Position Circle.	Cape Sid. Time. — Distance or Position Angle.
h m s	r	h m s
3 19 26	18 381 4·139	3 22 3·3
20 48	·147	
24 52	181 219 3·850	″
25 52	·849	6516·887

Iris and D. M. + 22°·354. (34)

Chronometer Time.				Cape Sid. Time. — Distance or Position Angle.
h m s	′ ″	′ ″	° ′	
3 36 15	0 28	6 20	68 40	
	0 30	6 0		
42 6	0 30	6 6	68 40	h m s
	0 25	5 38		3 42 29·1
45 30	0 28	7 34	68 20	° ′ ″
	0 24	7 5		68 36 42
48 50	0 30	9 25	68 20	
	0 22	8 53		

Iris and D. M. + 22°·354. (35)

Chronometer Time.				Cape Sid. Time. — Distance or Position Angle.
h m s	′ ″	′ ″	° ′	
3 53 55	0 35	0 41	248 30	
	0 20	0 0		
58 12	0 34	9 30	248 20	h m s
	0 18	8 50		3 59 10·6
4 1 57	0 35	2 0	248 50	° ′ ″
	0 20	1 17		248 41 4
5 23	0 35	5 10	248 50	
	0 19	4 28		

Digitized by Google

Chronometer Time.	Readings of Scale or Position Circle.		Cape Sid. Time. — Distance or Position Angle.	Chronometer Time.	Readings of Scale or Position Circle.		Cape Sid. Time. — Distance or Position Angle.
			1888, October 22. GILL (*continued*).				
	Standard Stars.		(36)				
h m s	′ ″	′ ″	° ′				
4 15 9	0 39	5 10	316 30				
	0 15	4 22					
18 7	0 38	5 15	316 30	h m s			
	0 16	4 12		4 18 55·6			
21 8	0 40	1 7	316 30	° ′ ″			
	0 14	0 7		316 32 14			
24 3	0 39	1 0	316 30				
	0 12	0 2					
	Iris and D. M. + 22°·354.		(37)		Iris and D. M. + 22°·354.		(38)
h m s	′ ″	′ ″	° ′		h m s	′ ″	′ ″	° ′	
4 30 17	0 39	8 36	248 30		4 46 15	0 41	2 5	69 0	
	0 15	7 38				0 9	1 8		
33 34	0 37	8 24	248 30	h m s	50 29	0 41	5 45	69 0	h m s
	0 14	7 25		4 35 36·1		0 11	4 45		4 51 39·8
38 15	0 40	5 3	249 0	° ′ ″	53 46	0 38	5 31	68 40	° ′ ″
	0 14	4 10		248 50 38		0 12	4 40		68 53 58
43 3	0 40	4 4	249 0		58 54	0 41	5 58	68 40	
	0 9	3 6				0 12	5 3		
I. 1–2 ; S. 2.									
Run for Distances (adopted) + 0r·0120.									
" " Position-Angles + 2″ in 10′.									
				Chronometer Slow — 41s·2.					
					h m	B in.	t °	T °	
					At 3 0	30·09	56·5	52·2	
					5 0	30·07	54·0	52·0	
			1888, October 24. GILL.						
	Standard Stars.		(39)		Standard Stars.			(40)
h m s	′ ″	′ ″	° ′		h m s	r		
3 12 38	0 18	3 59	136 30		3 24 35	18 381	3·956	h m s
	0 34	4 0			26 56		·890	3 29 12·4
15 43	0 15	4 27	136 30	h m s	31 42	181 219	3·777	″
	0 30	4 25		3 16 31·7	36 19		·763	6516·184
18 25	0 15	10 25	136 20	° ′ ″				
	0 29	10 26		136 31 54				
22 3	0 17	0 17	136 30					
	0 28	0 17						
	Iris and D. M. + 22°·354.		(41)		Iris and D. M. + 22°·354.			(42)
	r				h m s	′ ″	′ ″	° ′	
3 45 48	106 295	2·140	h m s		3 59 44	0 20	8 44	33 20	
49 34		·017	3 50 1·4			0 23	8 20		
52 42	94 307	1·871	″		4 4 30	0 18	6 46	33 30	h m s
54 44		2·055	480·524			0 23	6 21		4 4 48·2
					4 7 3	0 21	8 18	34 20	° ′ ″
						0 23	7 44		34 1 36
					4 10 38	0 23	4 47	34 30	
						0 18	4 20		

Digitized by Google

Chronometer Time.	Readings of Scale or Position Circle.		Cape Sid. Time. — Distance or Position Angle.
			1888, October 24. GILL (*continued*).
	Iris and D. M. + 22°·354		(43)
h m s	′ ″	′ ″	° ′
4 17 58	0 25	7 33	214 40
	0 17	7 5	
20 59	0 25	6 0	214 50
	0 17	5 26	
25 48	0 27	4 55	214 0
	0 15	4 22	
29 35	0 29	2 59	214 0
	0 14	2 22	
			h m s
			4 22 54·4
			° ′ ″
			214 27 16
	Iris and D. M. + 22°·354.		(44)
h m s		r	
4 35 3		94 307 4·100	h m s
36 45		·195	4 38 36·7
40 51		106 294 3·201	″
44 30		·070	506·219
	Iris and D. M. + 22°·354.		(45)
4 47 38	0 28	9 0	215 30
	0 17	8 15	
50 12	0 26	4 56	215 40
	0 16	4 15	
54 4	0 29	9 13	214 40
	0 13	8 31	
59 49	0 30	10 10	214 50
	0 13	9 17	
			h m s
			4 52 15·2
			° ′ ″
			215 17 38
	Iris and D. M. + 22°·354.		(46)
	′ ″	′ ″	° ′
5 3 3	0 30	4 10	215 0
	0 11	3 17	
5 0	0 27	4 19	215 0
	0 11	3 30	
9 59	0 30	2 57	216 10
	0 10	2 5	
12 50	0 31	9 43	216 10
	0 8	8 48	
			h m s
			5 7 2·4
			° ′
			215 39 32
	Standard Stars.		(47)
5 21 40	0 33	4 50	316 30
	0 4	3 42	
24 18	0 34	1 15	316 30
	0 6	0 12	
			h m s
			5 32 18 4
			° ′ ″
			316 32 10

	h m	B in.	t °	T °
Run for Distances + 0r·0132.	At 3 10	30·07	60·5	59·1
" " Position-Angles (adopted) + 2″ in 10′.	5 30	30·04	60·0	58·7

I. 3-4; S. 3-4 throughout—with occasional delay, sometimes by cloud, sometimes by the excessive badness of the images.
Chronometer Slow —40s·6.

Chronometer Time.	Readings of Scale or Position Circle.		Cape Sid. Time. — Distance or Position Angle.
			1888, October 25. FINLAY.
	Iris and D. M. + 22°·354.		(48)
h m s		r	
3 19 43	115 285	4·833	h m s
21 45		·679	3 21 50·7
23 24	85 316	4·616	″
25 10		·690	1222·302
	Iris and D. M. + 22°·347.		(49)
h m s		r	
3 30 14	80 321	2·871	h m
32 15		·749	3 32 16·7
33 53	120 281	2·488	
35 24		·600	1604·994
	Iris and D. M. + 22°·347.		(50)
3 37 27	120 281	2·706	h m s
38 36		·699	3 39 1·5
40 35	80 321	2·320	″
42 7		·248	1601·545
	Iris and D. M. + 22°·354.		(51)
3 46 37	84 316	1·937	h m s
48 5		·973	3 48 48·0
50 52	115 285	3·009	
52 17		2·907	1237·800

Digitized by Google

1888, October 25. FINLAY (*continued*).

Iris and D. M. + 22°·354. (52)

Chronometer Time.	Readings of Scale or Position Circle.	Cape Sid. Time. — Distance or Position Angle.
h m s	r	
3 55 47	115 285 2·657	h m s
58 11	·569	3 58 24·0
4 0 23	84 316 2·760	″
1 54	·817	1243·737

Iris and D. M. + 22°·347. (53)

Chronometer Time.	Readings of Scale or Position Circle.	Cape Sid. Time. — Distance or Position Angle.
h m s	r	
4 7 28	80 320 4·921	h m s
8 48	·775	4 9 23·5
10 57	120 281 4·488	″
13 0	·566	1585·228

Iris and D. M. + 22°·347. (54)

Chronometer Time.	Readings of Scale or Position Circle.	Cape Sid. Time. — Distance or Position Angle.
4 14 11	120 281 4·766	h m s
15 37	·657	4 16 21·2
17 39	80 320 4·275	″
20 37	·218	1581·272

Iris and D. M. + 22°·354. (55)

Chronometer Time.	Readings of Scale or Position Circle.	Cape Sid. Time. — Distance or Position Angle.
4 25 29	84 316 4·167	h m s
27 30	·251	4 28 3·7
29 10	115 284 4·841	″
32 45	·569	1260·382

	B	t	T
h m	in.	°	°
At 3 54	30·03	56·0	55·2
4 35	30·03	56·0	54·5

Run + 0ᵐ·0183.
I. 1–2 ; S. 2 for Observations 48–51, and I. 2–3 ; S. 2–3 for Observations 52–55.
Chronometer Slow — 39ᵐ·8.

1888, October 26. GILL.

Standard Stars. (56)

Chronometer Time.				Cape Sid. Time. — Distance or Position Angle.
h m s	′ ″	′ ″	° ′	
3 15 37	0 24	3 41	136 30	
	0 32	3 35		
17 49	0 28	3 35	136 30	h m s
	0 31	3 30		3 18 49·9
20 47	0 5	0 31	136 30	° ′ ″
	0 33	0 46		136 31 42
23 44	0 11	0 29	136 30	
	0 34	0 40		

Standard Stars. (57)

Chronometer Time.	Readings of Scale or Position Circle.	Cape Sid. Time. — Distance or Position Angle.
h m s	r	
3 26 44	18 381 4·590	h m s
28 35	·589	3 29 36·4
31 27	181 219 4·441	″
34 17	·481	6516·063

Iris and D. M. + 22°·347. (58)

Chronometer Time.	Readings of Scale or Position Circle.	Cape Sid. Time. — Distance or Position Angle.
	r	
3 47 46	111 289 4·619	h m s
49 36	·652	3 50 37·4
53 7	89 312 4·150	″
54 38	·097	899·536

Iris and D. M. + 22°·347. (59)

Chronometer Time.	Readings of Scale or Position Circle.	Cape Sid. Time. — Distance or Position Angle.
	r	
3 56 44	89 312 4·030	h m s
59 33	3·871	3 59 42·4
4 1 54	111 289 5·168	″
3 16	·322	895·598

Iris and D. M. + 22°·347. (60)

Chronometer Time.	Readings of Scale or Position Circle.	Cape Sid. Time. — Distance or Position Angle.
	r	
4 6 46	111 289 5·474	h m s
9 38	·580	4 10 44·4
13 28	89 312 3·290	″
15 43	·130	1890·459

Iris and D. M. + 22°·347. (61)

Chronometer Time.	Readings of Scale or Position Circle.	Cape Sid. Time. — Distance or Position Angle.
	r	
4 18 0	89 312 3·040	h m s
19 54	2·989	4 19 59·6
21 24	111 290 2·098	″
23 18	2·182	886·444

Digitized by Google

1888, October 26. GILL (*continued*).

Iris and D. M. + 22°·347. (62)

Chronometer Time.	Readings of Scale or Position Circle.		Cape Sid. Time. — Distance or Position Angle.
h m s	′ ″	′ ″	° ′
4 26 49	0 30	0 35	16 20
	0 23	9 57	
31 24	0 32	5 26	16 10
	0 22	4 46	
34 3	0 32	4 55	15 40
	0 20	4 9	
37 4	0 31	2 33	15 40
	0 22	1 40	

h m s: 4 31 40·6

° ′ ″: 16 1 20

Iris and D. M. +22°·347. (63)

Chronometer Time.	Readings of Scale or Position Circle.		Cape Sid. Time. — Distance or Position Angle.
h m s	′ ″	′ ″	° ′
4 44 21	0 40	1 31	195 30
	0 20	0 45	
47 59	0 42	3 41	195 20
	0 20	2 55	
51 4	0 40	6 53	195 40
	0 15	6 5	
53 45	0 42	1 55	195 40
	0 13	1 7	

h m s: 4 48 37·9

° ′ ″: 195 35 8

Standard Stars. (64)

Chronometer Time.	Readings of Scale or Position Circle.		Cape Sid. Time. — Distance or Position Angle.
h m s	′ ″	′ ″	° ′
5 0 30	0 45	4 42	136 30
	0 10	3 51	
3 25	0 44	4 53	136 30
	0 13	4 2	
6 38	0 40	1 5	136 30
	0 15	0 18	
8 58	0 40	1 29	136 30
	0 14	0 43	

h m s: 5 4 13·4

° ′ ″: 135 32 10

Standard Stars. (65)

Chronometer Time.	Readings of Scale or Position Circle. r	Cape Sid. Time. — Distance or Position Angle.
h m s		
5 12 6	19 382 3·808	h m s
14 20	·790	5 13 58·6
16 3	181 219 5·428	″
	Not recorded.	6507·212

Run for Distances + 0r·0147.
„ „ Position-Angles + 1′ in 10′.

	h m	B in.	t °	T °
At	3 40	29·99	52·0	46·9
	5 40	29·98	51·0	47·5

I. 1; S. 1–2 for Observations 56–61; I. 2; S. 2 for Observation 62 and 63; I. 1–2; S. 3 for Observations 64 and 65.
Chronometer Slow — 39s·4.

1888, October 27. FINLAY.

Standard Stars. (66)

Chronometer Time.	Readings of Scale or Position Circle. r	Cape Sid. Time. — Distance or Position Angle.
h m s		
3 25 30	181 219 4·466	h m s
27 24	·488	3 28 11·8
30 12	18 381 4·614	″
32 18	·508	6515·838

Iris and D. M. + 22°·347. (67)

Chronometer Time.	Readings of Scale or Position Circle. r	Cape Sid. Time. — Distance or Position Angle.
h m s		
3 41 12	107 293 4·630	h m s
55 38	·467	4 2 29·2
4 7 28	92 307 4·769	
12 4	·831	583·119
22 43	·990	
129 8	5·020	

Iris and D. M. + 22°·347. (68)

Chronometer Time.	Readings of Scale or Position Circle. r	Cape Sid. Time. — Distance or Position Angle.
h m s		
4 43 5	107 293 3·805	h m s
47 16	·744	4 49 38·0
51 5	92 307 5·345	
53 43	·443	
59 10	·546	589·846
5 2 37	·529	

Run + 0r·0165.
I. 2; S. 3. Observations frequently interrupted and finally stopped by cloud.
Chronometer Slow — 39s·2.

	h m	B in.	t °	T °
At	3 20	29·94	53·1	50·1
	5 10	29·94	51·1	47·2

Digitized by Google

Chronometer Time.	Readings of Scale or Position Circle.	Cape Sid. Time. — Distance or Position Angle.	Chronometer Time.	Readings of Scale or Position Circle.	Cape Sid. Time. — Distance or Position Angle.
1888, October 29. GILL.					
	Iris and D. M. + 22°·331. (69)			**Iris and D. M. + 20°·404.** (70)	
h m s	r	h m s	h m s	r	h m s
3 29 23	148 251 5·870	3 33 8·0	3 42 12	31 369 4·098	3 51 4·0
32 15	·923	"	43 34	·125	"
34 13	51 349 3·080	3895·018	45 5	169 232 5·005	5508·922
39 10	·069		4 15 54	4·800	

	B	t	T
h m	in.	°	°
At 3 27	30·292	53·8	53·0
5 0	30·288	55·0	55·3

Run + 0r·0093.
I. 1–2 ; S. 2–3. Sky clouded over at $3^h\ 45^m$; one bisection obtained at $4^h\ 15^m$ and then dense cloud : waited till 5^h, but quite hopeless.
Chronometer Slow — $37^s·3$.

1888, October 30. FINLAY.

	Iris and D. M. + 22°·331. (71)			**Iris and D. M. + 20°·404.** (72)	
h m s	r	h m s	h m s	r	h m s
3 21 38	147 254 * 2·250	3 25 40·5	3 33 46	29 371 3·617	3 35 40·3
25 26		"	34 56	·646	"
28 15	53 348 2·704	3771·477	36 52	170 229 5·304	5664·642
29 47	·807		39 31	·400	
	Iris and D. M. + 20°·404. (73)			**Iris and D. M. + 22°·331.** (74)	
3 42 34	* 170 229 5·336	h m s	3 52 31	53 348 2·624	h m s
44 30	·245	3 44 44·5	54 21	·670	3 54 58·5
46 20	29 371 3·871	"	57 8	147 254 2·455	"
47 58	·841	5666·072	58 18	·518	3769·741
	Iris and D. M. + 22°·331. (75)			**Iris and D. M. + 20°·404.** (76)	
4 2 20	147 254 2·531	h m s	4 11 59	29 371 4·132	h m s
3 37	·492	4 4 25·8	13 16	·254	4 15 1·0
5 18	53 348 2·608	"	17 46	170 229 4·682	"
8 52	·425	3768·962	19 27	·782	5670·570
	Iris and D. M. + 20°·404. (77)			**Iris and D. M. + 22°·331.** (78)	
(4 24 2)	170 229 { obliterated record }	h m s	4 34 17	53 348 2·348	h m s
25 35	4·832	Uncertain.	36 54	·330	4 38 15·5
27 8	29 371 4·451	"	41 0	147 254 2·804	"
30 18	·326	5671·047	43 15	·875	3766·422

Run + 0r·0063.

	B	t	T
h m	in.	°	°
At 3 20	30·23	57·9	57·7
4 0	30·21	57·6	56·4
5 50	30·19	57·4	57·6

I. 2–3 ; S. 2–3 during Observations 71–74 ; I. 3 and 3–4 ; S. 3 during Observations 75–78.
* One of the micrometer readings was not printed, it is uncertain which was omitted.
Chronometer Slow — $36^s·0$.

Digitized by Google

Chronometer Time.	Readings of Scale or Position Circle.	Cape Sid. Time. — Distance or Position Angle.	Chronometer Time.	Readings of Scale or Position Circle.	Cape Sid. Time — Distance or Position Angle.
	1888, October 31. GILL.				
	Iris and D. M. + 22°·329.	(79)		Iris and D. M. + 20°·404.	(80)
h m s	r	h m s	h m s	r	h m s
3 31 47	154 246 4·377	3 34 48·1	3 46 50	26 375 2·410	3 50 23·4
34 39	·535	"	48 56	·450	"
36 16	45 354 4·481	4350·085	52 31	174 227 2·527	5933·641
39 0	·387		55 46	·453	
	Iris and D. M. + 20°·404.	(81)		Iris and D. M. + 22°·329.	(82)
4 0 4	174 227 2·431	h m s	4 14 56	46 355 3·650	h m s
2 42	·206	4 3 37·6	17 14	·499	4 18 34·4
5 14	26 375 2·732	"	19 42	154 246 5·530	"
9 0	·851	5936·322	24 55	·667	4340·028
	Iris and D. M. + 22°·329.	(83)		Iris and D. M. + 20°·404.	(84)
4 28 44	154 246 5·749	h m s	5 7 41	26 375 3·826	h m s
30 45	·812	4 32 0·6	10 47	4·000	5 13 28·6
33 2	46 355 3·158	"	17 42	174 226 4·909	"
38 2	2·963	4336·529	20 15	·860	5949·132

	B	t	T
h m	in.	°	°
At 3 57	30·04	60·0	61·5
4 26	30·03	60·0	60·3
5 22	30·02	60·0	62·0

Run + 0r·0123.
I. 3-4: S. 3-4 during Observations 79-82; I. 4 during Observations 83 and 84, except by glimpses, when images were 3-4; observations were made in these glimpses. Chronometer Slow — 37s·4.

	1888, November 2. GILL.				
	Iris and D. M. + 22°·329.	(85)		Iris and D. M.	(86)
h m s	r	h m s	h m s	r	h m s
3 41 49	152 249 2·172	3 43 12·7	3 51 11	59 342 3·891	3 53 53·7
42 45	·147	"	53 47	·943	"
44 43	48 353 2·749	4172·840	56 4	141 259 4·990	3302·480
46 6	·766		57 5	·980	
	Iris and D. M.	(87)		Iris and D. M. + 22°·329.	(88)
3 58 27	141 259 5·053	h m s	4 12 5	48 353 2·820	h m s
59 58	·005	4 2 1·9	12 50	·851	4 13 46·9
4 5 4	59 342 3·822	"	15 16	152 249 2·060	"
7 12	·911	3302·008	17 28	·126	4173·567
	Iris and D. M. + 22°·329.	(89)		Iris and D. M.	(90)
4 20 39	152 249 2·038	h m s	4 28 20	59 342 3·760	h m s
22 20	·062	4 22 30·4	29 5	·720	4 29 49·7
24 7	48 353 2·792	"	31 19	141 259 5·264	"
25 28	·836	4173·674	33 7	·245	3300·235

Digitized by Google

1888, November 2. GILL (*continued*).

Iris and D. M. + 20°. (91)

Chronometer Time.	Readings of Scale or Position Circle.	Cape Sid. Time. — Distance or Position Angle.
h m s	r	h m s
4 34 3	141 259 5·170	4 35 54·9
35 51	·158	"
37 22	59 342 3·712	3300·420
38 56	·660	

Iris and D. M. + 22°·329. (92)

Chronometer Time.	Readings of Scale or Position Circle.	Cape Sid. Time. — Distance or Position Angle.
h m s	r	h m s
4 41 24	48 353 2·777	4 42 26·7
42 10	·800	"
43 17	152 249 2·129	4173·262
45 28	·085	

Run + 0r·0098.
I. 1–2; S. 2 throughout.

Chronometer Slow — 38s·1.

	B	t	T
h m	in.	°	°
At 3 40	30·10	57·2	56·0
4 47	30·10	57·5	54·5

1888, November 3. FINLAY.

Iris and D. M. + 21°·317. (93)

Chronometer Time.	Readings of Scale or Position Circle.	Cape Sid. Time. — Distance or Position Angle.
h m s	r	h m s
3 57 28	142 258 3·067	4 6 29·3
59 38	2·847	
4 12 43	57 343 1·944	3402·643
18 36	·791	

Iris and D. M. + 20°·388. (94)

Chronometer Time.	Readings of Scale or Position Circle.	Cape Sid. Time. — Distance or Position Angle.
h m s	r	h m s
4 24 12	58 342 4·455	4 26 23·8
25 56	·486	"
28 4	141 258 4·510	3348·316
29 51	·270	

Iris and D. M. + 20°·388. (95)

Chronometer Time.	Readings of Scale or Position Circle.	Cape Sid. Time. — Distance or Position Angle.
h m s	r	h m s
4 31 29	141 258 4·435	4 35 28·8
34 33	·289	
38 5	58 342 4·710	3349·622
40 16	·696	

Iris and D. M. + 21°·317. (96)

Chronometer Time.	Readings of Scale or Position Circle.	Cape Sid. Time. — Distance or Position Angle.
h m s	r	h m s
4 51 36	57 342 5·271	4 56 49·8
57 1	·030	"
58 51	142 258 3·971	3494·166
5 2 19	·881	

Run + 0r1·0093.
Haze and cloud; Stars faint. Observations very unsatisfactory.

Chronometer Slow — 37s·0.

	B	t	T
h m	in	°	°
At 3 50	30·18	56·1	53·7
5 5	30·16	54·5	51·3

1888, November 4. GILL.

Iris and D. M. + 21°·321. (97)

Chronometer Time.				Cape Sid. Time. — Distance or Position Angle.
h m s	′ ″	′ ″	° ′	
3 38 52	0 37	4 29	91 20	h m s
	0 32	4 0		3 45 0·6
42 16	0 37	8 17	91 20	
	0 32	7 52		° ′ ″
48 32	0 35	5 10	91 10	91 20 46
	0 29	4 40		
52 49	0 37	8 7	91 10	
	0 27	7 35		

Standard Stars. (98)

Chronometer Time.				Cape Sid. Time. — Distance or Position Angle.
h m s	′ ″	′ ″	° ′	
4 3 8	0·37	0 43	136 30	h m s
	0·25	10 10		4 9 10·1
5 39	0·37	1 17	136 30	
	0·28	1 10		° ′ ″
12 29	0·39	4 14	136 30	136 31 48
	0·25	3 45		
17 51	0·37	3 55	136 30	
	0·26	3 22		

Digitized by Google

Chronometer Time.	Readings of Scale or Position Circle.	Cape Sid. Time. — Distance or Position Angle.	Chronometer Time.	Readings of Scale or Position Circle.	Cape Sid. Time. — Distance or Position Angle.
	1888, November 4. GILL (*continued*).				
	Iris and D. M. + 21°·321. (99)				
h m s	′ ″ ′ ″ °				
4 25 42	0 40 5 19 92 10				
	0 23 4 40	h m s			
		4 33 30·8			
28 55	0 41 7 47 92 10				
	0 20 7 6				
		° ′ ″			
32 13	0 41 4 39 92 0	92 13 18			
	0 22 3 51				
49 40	0 38 8 41 92 10				
	0 20 8 0				

Run for Position-Angles + 5″ for 10′.
I. 3-4; S. 3-4, and finally so bad that compelled to stop observations. Had to wait 17 minutes to see an image sufficiently well defined for last pointing.

	B	t	T
h m	in.	°	°
At 4 51	30·04	55·7	56·0

Chronometer Slow — 36ˢ·7.

1888, November 5. GILL.

	Standard Stars. (100)			Iris and D. M. + 21°·321. (101)	
h m s	r		h m s	r	
3 28 28	181 219 4·311	h m s	3 40 2	90 311 2·432	h m s
29 32	·397	3 30 43·3	41 14	·400	3 41 21·3
32 35	18 381 4·583	″	42 38	110 291 2·580	″
34 44	·535	6516·445	43 57	·623	800·904

	Iris and D. M. + 21°·321. (102)			Iris and D. M. + 21°·321. (103)	
3 44 53	110 291 2·640	h m s	3 51 40	90 311 2·289	h m s
45 32	·635	3 46 11·0	53 40	·298	3 54 10·3
47 39	90 311 2·340	″	55 8	110 291 2·716	″
49 6	·345	800·357	58 39	·800	799·507

	Iris and D. M. + 21°·321. (104)			Iris and D. M. + 21°·321. (105)	
3 59 48	110 291 2·741	h m s	4 6 59	90 311 2·159	h m s
4 0 50	·715	4 1 46·8	7 50	·150	4 8 3·3
3 47	90 311 2·205	″	9 0	110 291 2·784	″
5 8	·215	799·236	10 50	·845	798·522

	Iris and D. M. + 21°·321. (106)			Iris and D. M. + 21°·321. (107)	
4 12 20	110 291 2·842	h m s	4 16 57	90 311 2·117	h m s
13 13	·828	4 13 25·8	18 5	·119	4 18 24·3
14 42	90 311 2·100	″	19 44	110 291 2·871	″
15 54	·153	798·282	21 17	·887	798·015

Digitized by Google

Chronometer Time.	Readings of Scale or Position Circle.	Cape Sid. Time. — Distance or Position Angle.	Chronometer Time.	Readings of Scale or Position Circle.	Cape Sid. Time. — Distance or Position Angle.
	1888, November 5. GILL (*continued*).				
	Iris and D. M. + 21°·321. (108)			Iris and D. M. + 21°·321. (109)	
h m s	r	h m s	h m s	r	h m s
4 22 24	110 291 2·910	4 23 52·5	4 30 23	90 311 2·000	4 31 50·5
23 9	·970	"	31 51	1·987	"
25 33	90 311 2·031	797·186	33 10	110 291 2·981	796·889
26 50	1·997		34 24	·977	
	Iris and D. M. + 21°·321. (110)			Standard Stars. (111)	
4 36 3	110 291 3·071	h m s	4 41 50	19 382 4·173	h m s
36 42	2·973	4 36 54·8	43 44	·081	4 45 26·5
38 10	90 311 1·918	"	48 45	181 219 4·886	"
39 10	·940	796·347	49 53	·920	6511·505

Run + 0r·0101.
I. 1–2; S. 2–3 during Observations 100–105; I 1–2; S. 3 during Observations 106–111.
Chronometer Slow — 36s·5.

	B	t	T
h m	in.	°	°
At 3 26	29·96	56·9	54·7
4 51	29·96	56·1	54·7

	1888, November 6. FINLAY.				
	Iris and D. M. + 21°·321. (112)			Iris and D. M. + 21°·321. (113)	
h m s	r	h m s	h m	r	h m s
3 17 31	113 287 2·801	3 19 33·9	3 23 40	86 314 2·368	3 28 24·9
19 36	·719	"	29 4	·620	"
21 9	86 314 2·280	1080·195	31 7	113 287 2·236	1083·884
22 25	·336		32 14	·190	
	Iris and D. M. + 21°·321. (114)			Iris and D. M. + 21°·321. (115)	
3 35 48	113 287 2·081	h m s	3 43 57	86 314 3·189	h m s
37 27	1·968	3 38 22·6	45 16	·240	3 47 0·9
40 12	86 314 2·995	"	46 29	113 286 5·637	"
42 29	3·139	1087·710	54 47	·300	1091·135
	Standard Stars. (116)			Standard Stars. (117)	
4 36 49	181 219 4·749	h m s	4 45 59	18 381 4·071	h m s
38 23	·731	4 39 54·4	47 4	·150	4 47 22·1
42 18	18 381 4·141	"	48 50	181 219 4·821	"
44 33	·169	6512·472	50 1	·865	6511·734

Run + 0r·0142.
I. 2–3; S. 3.
Chronometer Slow — 36s·4.

	B	t	T
h m	in.	°	°
At 3 15	30·07	58·3	57·9
4 0	30·06	58·0	56·9
5 25	30·05	57·5	55·7

Digitized by Google

Chronometer Time.	Readings of Scale or Position Circle.	Cape Sid. Time. — Distance or Position Angle.	Chronometer Time.	Readings of Scale or Position Circle.	Cape Sid. Time. — Distance or Position Angle.
	1888, November 7. GILL.				
	Iris and D. M. + 21°·304. (118)			Iris and D. M. + 19°·340. (119)	
h m s	r	h m s	h m s	r	h m s
3 25 24	160 239 5·785	3 28 28·2	3 34 19	30 369 5·852	3 37 32·2
28 14	·714		35 46	·809	
30 43	39 361 3·089	"	40 40	169 231 3·198	"
31 56	·091	4858·035	41 48	·264	5566·100
	Iris and D. M. + 19°·340. (120)			Iris and D. M. + 21°·304. (121)	
3 42 41	169 231 3·184	h m	3 51 39	39 361 3·284	h m s
43 53	·312	3 44 50·7	53 15	·314	3 54 13·9
47 2	30 369 5·409	"	56 29	160 239 5·651	"
48 11	·390	5563·850	57 57	·560	4859·810
	Iris and D. M. + 21°·304. (122)			Iris and D. M. + 19°·340. (123)	
4 1 25	160 239 5·509	h m s	4 9 55	30 369 4·538	h m s
4 3	·531	4 4 9·2	11 44	·503	4 11 58·7
6 19	39 361 3·323	"	13 36	169 231 4·415	"
7 14	·409	4860·577	15 4	·518	5553·308
	Iris and D. M. + 19°·340. (124)			Iris and D. M. + 21°·304. (125)	
4 17 21	169 231 4·669	h m s	4 28 3	39 361 3·507	h m s
19 2	·645	4 20 27·8	29 10	·520	4 31 32·7
22 48	31 370 4·055	"	33 47	160 239 5·313	"
25 4	·030	5549·891	37 35	·262	4862·489
	Iris and D. M. + 21°·304. (126)			Iris and D. M. + 19°·340. (127)	
4 39 17	160 239 5·271	h m s	4 50 38	31 370 3·029	h m s
42 43	·180	4 45 0·2	51 56	2·871	4 52 22·2
44 0	39 361 3·671	"	53 39	169 231 5·910	"
48 25	·645	4863·522	55 40	6·099	5537·625
	Iris and D. M. + 19°·340. (128)			Iris and D. M. + 21°·304. (129)	
4 58 5	169 232 2·150	h m s	5 7 32	39 361 3·661	h m s
59 39	·267	4 59 53·9	8 55	·761	5 9 6·9
5 1 9	31 370 2·546	"	10 26	160 239 5·239	"
3 7	·431	5534·345	11 59	·154	4863·934

	B	t	T
h m	in.	°	°
At 3 20	30·10	58·5	57·0
5 14	30·07	57·0	56·1

Run + 0ᵀ·0100.
I. 1–2; S. 2 during Observations 118–121; I. 1–2; S. 3 during Observations 122–125; I. 2; S. 3 during Observations 126–129.
Chronometer Slow 36ˢ·1.

Digitized by Google

Chronometer Time.	Readings of Scale or Position Circle.	Cape Sid. Time. — Distance or Position Angle.
1888, November 9. GILL.		
Iris and D. M. + 21°·304. (130)		
h m s	r	h m s
3 7 30	168 232 5·708	3 12 26·6
11 58	·704	
15 3	32 369 2·827	″
17 39	·775	5458·236
Iris and D. M. + 19°·340. (131)		
h m s	r	h m s
3 21 13	41 359 5·507	3 23 50·6
22 55	·559	
26 0	159 242 2·889	″
27 38	·903	4724·272
Iris and D. M. + 19°·340. (132)		
3 28 44	159 242 2·963	h m
30 45	3·077	3 44 43·6
*58 48	41 359 4·682	″
4 2 51	·412	4718·693
Iris and D. M. + 21°·304. (133)		
4 5 38	32 369 4·050	h m s
6 31	·141	4 6 57·9
8 32	168 232 4·190	″
9 34	·067	5472·675
Iris and D. M. + 21°·304. (134)		
4 12 49	168 232 4·079	h m s
15 34	3·950	4 15 3·4
18 35	31 368 4·320	″
Stopped by cloud.		5474·346

	B	t	T
	in.	°	°
At h m 3 5	30·01	56·2	55·3
4 25	30·01	56·7	56·0

Run + 0ʳ·0122.
I. 3; S. 3. Frequent haze.
*Interruption of 28ᵐ by cloud; refraction must be independently computed for the epoch of the two first and two last pointings of this observation.

Chronometer Slow — 35ˢ·9.

Chronometer Time.	Readings of Scale or Position Circle.	Cape Sid. Time. — Distance or Position Angle.
1888, November 10. FINLAY.		
Iris and D. M. + 20°·341. (135)		
h m s	r	h m s
3 43 53	148 252 5·330	3 46 54·5
47 13	·470	
48 45	52 349 2·999	″
50 9	·928	3856·898
Iris and D. M. + 19°·340. (136)		
h m s	r	h m s
3 53 28	44 355 5·769	3 57 50·3
58 7	44 356 1·929	
4 0 12	155 245 2·625	″
1 56	·682	4446·400
Iris and D. M. + 19°·340. (137)		
4 3 31	155 245 2·772	h m s
6 7	·737	4 9 35·8
14 57	44 355 5·368	″
16 10	·463	4443·756
Iris and D. M. + 20°·341. (138)		
4 21 30	52 349 2·104	h m s
23 56	·010	4 24 31·3
26 40	148 253 2·660	″
28 21	·635	3846·142
Iris and D. M. + 20°·341. (139)		
4 32 2	148 253 2·698	h m s
34 8	·858	4 35 21·5
37 51	52 348 5·514	″
39 47	·469	3842·703
Iris and D. M. + 19°·340. (140)		
4 44 42	44 355 4·779	h m s
47 14	·755	4 47 4·0
48 43	155 245 3·539	″
49 59	·580	4436·439

Digitized by Google

Chronometer Time.	Readings of Scale or Position Circle.	Cape Sid. Time. — Distance or Position Angle.	Chronometer Time.	Readings of Scale or Position Circle.	Cape Sid. Time. — Distance or Position Angle.
	1888, November 10. FINLAY (*continued*).				
	Iris and D. M. + 19°·340. (141)			Iris and D. M. + 20°·341. (142)	
h m s	r		h m s	r	
4 51 45	155 245 3·647	h m s	5 3 2	52 348 4·730	h m s
54 26	·750	4 55 17·5	4 14	·670	5 6 8·5
57 37	44 355 4·501		8 46	148 253 4·002	
59 44	·627	4434·721	10 54	3·956	3832·675
				B t T	
			h m	in. ° °	
			At 3 40	30·18 56·7 54·1	
			5 12	30·17 55·0 53·0	
Run + 0r·0155.					
I. variable from 2–3 to 4; S. 3 during Observations 135–138; I. 2–3 to 3; S. 3 during Observations 139–142. Chronometer Slow — 35s·5.					
	1888, November 11. GILL.				
	Iris and D. M 20°·341 . (143)			Iris and D. M. + 19°·340. (144)	
h m s	r		h m s	r	
3 41 26	145 256 2·469	h m s	3 54 32	46 354 2·779	h m s
43 58	·510	3 46 20·8	57 26	·829	3 58 15·8
50 14	55 345 5·806		4 0 44	153 246 5·656	
52 6	·790	3605·141	2 42	·690	4295·702
	Iris and D. M. + 19°·340. (145)			Iris and D. M. + 20°·341. (146)	
4 6 53	153 246 5·631	h m s	4 23 21	55 345 5·294	h m s
9 31	·737	4 10 51·8	32 24	·054	4 34 37·3
13 42	46 354 2·616		36 42	145 256 3·503	
15 42	·732	4294·994	38 23	·405	3597·158
				B t T	
			h m	in. ° °	
			At 3 40	30·09 59·8 59·5	
Run + 0r·0123.			4 40	30·07 59·9 59·4	
I. at best 3, but generally too bad to be observed at all; S. 3. Very poor set of observations. Chronometer Slow — 35s·2.					
	1888, November 12. FINLAY.				
	Iris and D. M. + 20°·341. (147)			Iris and D. M. + 19°·340. (148)	
h m s	r		h m s	r	
3 34 37	144 257 2·553	h m s	3 44 36	46 353 4·409	h m s
37 14	·548	3 37 14·6	46 23	·390	3 46 30·8
38 57	56 345 1·903		48 0	153 247 4·066	
40 33	·890	3525·106	49 27	·014	4271·865
	Iris and D. M. + 19°·340. (149)			Iris and D. M. + 20°·341. (150)	
3 51 24	153 247 4·011	h m s	4 2 23	56 344 5·772	h m s
53 51	·055	3 54 32·6	3 53	·798	4 4 17·6
56 31	46 353 4·453		5 55	144 257 2·693	
58 47	·407	4272·050	7 22	·727	3523·787

Digitized by Google

Chronometer Time.	Readings of Scale or Position Circle.	Cape Sid. Time. — Distance or Position Angle.	Chronometer Time.	Readings of Scale or Position Circle.	Cape Sid. Time. — Distance or Position Angle.
1888, November 12. FINLAY (*continued*).					
	Iris and D. M. + 20°·341. (151)			Iris and D. M. + 19°·340. (152)	
h m s	r	h m s	h m s	r	h m s
4 9 59	144 257 2·705	4 11 27·3	4 17 42	46 353 4·424	4 19 42·3
11 1	·742		19 15	·431	
12 46	56 344 5·800	″	21 1	153 247 3·990	″
14 26	·751	3523·672	23 14	4·050	4272·105
	Iris and D. M. + 19°·340. (153)			Iris and D. M. + 20°·341. (154)	
4 25 19	153 247 4·013	h m s	4 34 56	56 344 5·647	h m s
26 28	·004	4 26 49·6	36 11	·572	4 36 59·3
28 7	46 353 4·405	″	38 39	144 257 2·859	″
29 47	·437	4272·125	40 34	·808	3522·286
	Iris and D. M. + 20°·341. (155)			Iris and D. M. + 19°·340. (156)	
4 46 29	144 257 2·904	h m s	4 53 47	46 353 4·347	h m s
47 33	·927	4 47 50·3	56 12	·438	4 58 11·1
49 2	56 344 5·607	″	5 1 55	153 247 4·092	″
50 40	·559	3521·739	3 13	·003	4271·788

Run +0r·0073.
I. 1–2; S. 3.

Chronometer Slow — 35s·7.

	h m	B in.	t °	T °
At	3 30	29·87	62·8	61·5
	4 10	29·87	61·1	56·0
	4 42	29·86	59·6	56·1
	5 8	29·86	59·2	58·2

1888, November 13. GILL.					
	Iris and D. M. + 20°·341. (157)			Iris and D.M. + 19°·340. (158)	
h m s	r	h m s	h m s	r	h m s
3 26 37	145 255 5·624	3 29 28·4	3 40 50	45 354 5·805	3 43 38·4
28 25	·605		43 31	·779	
31 10	55 346 3·005	″	45 31	154 246 2·547	″
34 5	2·944	3615·325	47 5	·661	4366·217
	Iris and D. M. + 19°·340. (159)			Iris and D. M. + 20°·341. (160)	
3 49 16	154 246 2·585	h m s	3 58 13	55 346 3·185	h m s
50 43	·550	3 51 18·4	4 1 22	·167	4 1 42·4
52 52	45 354 5·841	″	4 4	145 255 5·195	″
54 46	·937	4366·885	5 34	·131	3618·605
	Iris and D. M. + 20°·341. (161)			Iris and D. M. + 19°·340. (162)	
4 7 6	145 255 5·110	h m s	4 19 26	45 355 2·063	h m s
9 24	·074	4 10 24·10	23 6	·214	4 25 8·9
11 50	55 346 3·293	″	28 30	154 246 2·130	″
15 41	·337	3619·661	31·57	·189	4370·142

Digitized by Google

1888, November 13. GILL (*continued*).

Chronometer Time.	Readings of Scale or Position Circle.	Cape Sid. Time. — Distance or Position Angle.
	Iris and D. M. + 19°·340. (163)	
h m s	r	h m s
4 34 43	154 246 2·175	4 37 1·1
36 22	·204	
38 52	45 355 2·363	″
40 31	341	4371·062
4 45 24	54 345 3·498	h m s
46 54	·492	4 48 4·1
49 41	145 255 4·780	″
52 41	·861	3621·917

Iris and D. M. + 20°·341. (164)

Run + 0r·0113.
I. 2–3; S. 3 for Observations 157–160; I. 2; S. 2–3 for Observations 161–164.
Definition improved as observations went on—whole very satisfactory.
Chronometer Slow — 35s·9.

	B	t	T
h m	in.	°	°
At 3 25	30·08	63·2	62·8
4 55	30·06	62·8	62·0

1888, November 18. FINLAY.

Chronometer Time.	Readings of Scale or Position Circle.	Cape Sid. Time. — Distance or Position Angle.
	Standard Stars. (165)	
h m s	r	h m s
1 58 24	18 381 4·442	2 1 34·7
2 0 10	·470	
2 57	181 219 3·882	″
7 14	·937	6518·158
2 18 28	114 285 5·760	h m s
22 18	·852	2 33 52·2
32 55	85 315 2·090	″
3 4 14	85 314 4·620	1160·409

Iris and D. M + 18°·277. (166)

	Iris and D. M. + 18°·277. (167)	
3 6 18	85 314 4·565	h m s
7 21	·532	3 8 12·8
8 38	114 286 3·974	″
10 34	4·019	1145·392

Chronometer Time.			Iris and D. M. + 18°·277. (168)	Cape Sid. Time. — Distance or Position Angle.
	′ ″	′ ″	° ′	
4 8 50	0 31	2 26	199 50	
	0 7	1 43		
14 5	0 34	8 20	199 40	h m s
	0 6	7 32		4 17 47·2
24 6	0 36	2 55	199 20	° ′ ″
	0 3	1 58		199 35 26
26 34	0 37	1 5	199 20	
	0 0	0 5		

Chronometer Time.			Standard Stars. (169)	Cape Sid. Time. — Distance or Position Angle.
	′ ″	′ ″	° ′	
4 50 43	0 52	4 57	136 30	
	0 2	3 48		
55 48	0 49	3 45	136 30	h m s
	0 0	2 34		4 56 23·4
58 33	0 51	1 50	136 30	° ′ ″
	0 5	0 44		136 31 50
5 2 56	0 55	10 54	136 20	
	9 57	19 40		
5 9 13	0 51	1 44	199 0	
	0 0	0 21		
17 47	0 53	6 43	198 50	h m s
	9 53	15 15		5 18 13·2
22 54	0 51	8 29	199 10	° ′ ″
	9 55	17 1		199 4 8
25 25	0 49	3 59	199 10	
	9 52	12 29		

Iris and D. M. + 18°·277. (170)

Run for Distances + 0r·0103.
Run for Position-Angles + 1″·5 in 10′.
During Observation 165, I. 3 and 3-4; S. 3; during Observations 166–170, I. 2–3; S. 3.
Thick cloud continually passing, causing much delay.
Chronometer Slow — 36s·6.

	B	t	T
h m	in.	°	°
At 1 56	30·19	54·4	51·6
3 12	30·20	53·0	50·4
5 30	30·20	52·2	51·0

Digitized by Google

1888, November 19. GILL.

Iris and D. M. + 18°·277. (171)

Chronometer Time.	Readings of Scale or Position Circle.	Cape Sid. Time. — Distance or Position Angle.
h m s	r	h m s
3 59 12	106 293 4·345	4 1 25·5
4 0 53	·487	"
3 18	93 307 3·833	538·343
4 46	·847	

Iris and D. M. + 18°·277. (172)

Chronometer Time.	Readings of Scale or Position Circle.	Cape Sid. Time. — Distance or Position Angle.
h m s	r	h m s
4 6 30	93 307 3·826	4 9 13·0
8 49	·669	"
10 58	106 293 4·778	535·947
13 2	·823	

Iris and D. M. + 18°·277. (173)

Chronometer Time.	Readings of Scale or Position Circle.	Cape Sid. Time. — Distance or Position Angle.
4 17 46	106 293 5·055	h m s
20 14	·173	4 21 3·5
23 35	93 307 3·112	"
25 6	·160	531·299

Iris and D. M. + 18°·277. (174)

Chronometer Time.	Readings of Scale or Position Circle.	Cape Sid. Time. — Distance or Position Angle.
4 29 49	93 307 2·933	h m s
33 29	·810	4 33 30·5
35 30	106 293 5·730	"
37 41	·763	526·795

Standard Stars. (175)

Chronometer Time.	Readings of Scale or Position Circle.	Cape Sid. Time. — Distance or Position Angle.
4 42 18	181 219 4·541	h m s
44 39	·613	4 45 18·5
46 31	19 382 3·823	"
50 13	·783	6511·515

Iris and D. M. + 18°·277. (176)

Chronometer Time.	Readings of Scale or Position Circle.		Cape Sid. Time. — Distance or Position Angle.
	° ′	′	h m s
4 55 21	178 8	7½	4 57 8·5
56 46	0·5	0·0	° ′ ″
58 5	178 48	47·5	178 24 53
5 0 49	43	42·5	

Standard Stars. (177)

Chronometer Time.	Readings of Scale or Position Circle.			Cape Sid. Time. — Distance or Position Angle.
	′ ″	′ ″	°	
5 5 28	0 44	4 29	136 30	
	0 29	3 55		
8 42	0 47	5 17	136 30	h m s
	0 30	4 39		5 9 33·0
11 52	0 47	0 47	136 30	° ′ ″
	0 29	0 8		136 32 6
14 37	0 50	1 28	136 30	
	0 30	1 12		

Iris and D. M. + 18°·277 (178)

Chronometer Time.	Readings of Scale or Position Circle.		Cape Sid. Time. — Distance or Position Angle.
			h m s
5 20 15	358 6	5	5 24 2·2
21 56	3	2·5	° ′ ″
26 24	357 2	1·0	357 32 56
30 1	2·5	1·5	

Run for Distance + cr·0096.
Run for Position-Angle — 1″ in 10′ (adopted from 20th).

	h m	B in.	t °	T °
At	3 58	30·27	57·0	56·4
	5 32	30·23	56·5	56·2

During Observations 171–174, I. 2–3; S. 2–3; During Observation 175, I. 2–3; S. 3–4; During 176 and 178, I. 3; S. 3; During 177, I. 3; S. 3–4.
Chronometer Slow —36ᵐ·8.

1888, November 20. FINLAY.

Iris and D. M. + 18°·277. (179)

Chronometer Time.	Readings of Scale or Position Circle.			Cape Sid. Time. — Distance or Position Angle.
h m s	′ ″	′ ″	° ′	
2 23 23	0 14	9 43	101 30	
	0 40	9 49		
26 9	0 21	4 11	101 20	h m s
	0 44	4 24		2 26 17·9
28 11	0 21	6 9	100 10	° ′ ″
	0 39	6 15		100 52 6
29 57	0 19	10 7	100 0	
	0 43	10 11		

Iris and D. M. + 18°·277. (180)

Chronometer Time.	Readings of Scale or Position Circle.			Cape Sid. Time. — Distance or Position Angle.
h m s	′ ″	′ ″	° ′	
2 31 45	0 21	5 14	99 50	
	0 40	5 24		
33 55	0 18	5 50	99 40	h m s
	0 37	5 52		2 35 4·4
37 9	0 17	10 14	100 30	′
	0 36	10 24		100 11 14
39 57	0 20	5 24	100 20	
	0 40	5 21		

Digitized by Google

1888, November 20. FINLAY (*continued*).

Chronometer Time.	Readings of Scale or Position Circle.		Cape Sid. Time. — Distance or Position Angle.
	Iris and D. M. + 18°·277.		(181)
h m s	′ ″	′ ″	° ′
2 41 53	0 25	3 6	100 20
	0 40	3 5	
43 17	0 23	4 54	100 10
	0 40	5 0	
45 55	0 20	4 5	99 0
	0 40	4 9	
47 48	0 22	1 45	99 0
	0 36	1 53	

h m s
2 44 6·2
° ′ ″
99 40 28

Chronometer Time.	Readings of Scale or Position Circle.		Cape Sid. Time. — Distance or Position Angle.
	Iris and D. M. + 18°·277.		(182)
h m s	′ ″	′ ″	° ′
2 50 1	0 22	3 31	98 50
	0 39	3 30	
52 19	0 22	2 40	98 40
	0 37	2 44	
54 4	0 22	8 53	99 20
	0 34	8 51	
56 4	0 26	1 44	99 20
	0 42	1 44	

h m s
2 52 29·9
′ ″
99 6 12

	Standard Stars.		(183)
2 59 50	0 24	10 15	136 20
	0 35	10 21	
3 2 27	0 23	10 7	136 20
	0 33	10 14	
5 18	0 34	4 15	136 30
	0 34	4 13	
7 18	0 34	4 16	136 30
	0 36	4 13	

h m s
3 3 6·2
° ′ ″
136 41 42

	Iris and D. M. + 18°·277.		(184)
3 17 6	0 35	1 10	278 0
	0 34	0 48	
19 5	0 37	1 30	278 0
	0 31	1 3	
21 35	0 37	9 41	276 30
	0 33	9 9	
23 25	0 37	5 30	276 30
	0 30	5 5	

h m s
3 19 40·7
° ′ ″
277 18 40

	Iris and D. M. + 18°·277.		(185)
3 25 48	0 40	6 54	276 20
	0 30	6 25	
27 47	0 38	7 27	276 10
	0 33	6 57	
29 42	0 36	4 21	277 10
	0 27	3 47	
31 30	0 36	6 47	277 0
	0 30	6 14	

h m s
3 28 4·7
° ′ ″
276 45 32

	Iris and D. M. + 18°.277.		(186)
3 35 8	0 35	3 15	276 50
	0 34	2 40	
37 17	0 38	3 58	276 40
	0 30	3 30	
39 14	0 36	10 16	275 20
	0 27	9 33	
41 8	0 36	10 14	275 10
	0 32	9 40	

h m s
3 37 34·7
° ′ ″
276 6 4

	Iris and D. M. + 18°·277.		(187)
3 43 0	0 41	4 56	275 10
	0 30	4 23	
45 2	0 38	7 40	275 0
	0 26	7 0	
47 5	0 40	6 45	276 0
	0 29	6 6	·
48 43	0 38	10 5	275 50
	0 30	9 26	

h m s
3 45 20·4
° ′ ″
275 36 28

	Standard Stars.		(188)
		r	h m s
4 3 25	181 219	4·200	4 6 20·4
6 6		·476	″
8 31	19 382	4·224	6514·956
9 48		·274	

	Iris and D. M. + 18°·277.		(189)
4 13 49	95 304	5·518	
15 34		·431	
17 55	104 296	2·950	
19 56		·943	

h m s
4 16 11·4
″
353·531

	Iris and D. M. + 18°·277.		(190)
4 21 17	104 296	2·955	
22 38		·902	
25 14	95 305	1·848	
26 45		·750	

h m s
4 23 21·4
″
355·178

Digitized by Google

Chronometer Time.	Readings of Scale or Position Circle.	Cape Sid. Time. — Distance or Position Angle.	Chronometer Time.	Readings of Scale or Position Circle.	Cape Sid. Time. — Distance or Position Angle.
1888, November 20. FINLAY (*continued*).					
	Iris and D. M. + 18°·277. (191)			Iris and D. M. + 18°·277. (192)	
h m s	r	h m s	h m s	r	h m s
4 28 15	95 305 1·853	4 34 49·9	4 40 46	104 296 2·474	4 42 5·4
36 7	2·059	″	41 54	·380	″
37 45	104 296 2·539	358·060	43 15	95 305 2·207	359·848
39 41	·487		44 55	·243	
	Iris and D. M. + 18°·277. (193)			Iris and D. M. + 18°·277. (194)	
4 48 17	95 305 2·320	h m s	4 53 17	104 296 2·173	h m s
49 24	·404	4 49 37·7	54 27	·120	4 54 37·2
51 2	104 296 2·176	″	56 0	95 305 2·573	″
52 16	·190	361·765	57 13	·500	362·828
	Standard Stars. (195)				
5 4 1	181 219 4·761	h m s			
5 27	·751	5 6 44·2			
7 18	19 382 3·709	″			
12 39	·420	6509·410			

Run for Distances + 0r·0165.
„ for Position-Angles — 1″ in 10′.
For Position-Angles I. 2 ; S. 2–3 ; For Distances I. 2–3 and 3 ; S. 3 and 3–4.
Chronometer Slow — 37s·1.

	B	t	T
h m	in.	°	°
At 2 20	30·15	59·6	56·6
3 10	30·14	57·3	55·1
4 0	30·12	57·1	55·5
5 20	30·10	56·8	54·0

1888, November 21. GILL.

	Iris and D. M. + 18°·277. (196)		
h m s	° ′	′	
3 9 11	55 31·0	30·5	h m s
10 37	31·0	30·5	3 12 57·2
15 5	55 0·5	0·0	° ′ ″
19 24	54 58·0	57·5	55 14 53

I. 2 ; S. 2–3. Observations stopped by clouds followed by rain.
Chronometer Slow — 37s·1.

	B	t	T
h m	in.	°	°
At 3 8	30·13	62·7	59·3

1888, November 22 (Evening). FINLAY.

	Iris and D. M. + 18°·277. (197)			Iris and D. M. + 18°·277. (198)	
h m s	r		h m s	r	
0 2 11	116 285 3·325	h m s	0 10 34	84 316 5·499	h m s
4 2	·277	0 4 31·3	11 57	·515	0 12 33·6
6 32	84 316 5·329	″	14 1	116 285 2·876	″
7 47	·376	1273·199	16 9	·811	1276·273

Digitized by Google

1888, November 22 (Evening). FINLAY (*continued*).

Iris and D. M. + 18°·277. (199)

Chronometer Time.	Readings of Scale or Position Circle.	Cape Sid. Time. — Distance or Position Angle.
h m s	r	h m s
0 18 50	116 285 2·726	0 21 23·1
20 2	·566	
22 49	84 317 1·945	″
26 18	2·127	1279·869

Standard Stars. (201)

0 40 27	181 219 3·939	h m s
42 3	·869	0 42 51·6
44 49	18 381 4·595	″
46 34	·617	6518·947

Iris and D. M. + 18°·277. (200)

h m s	r	h m s
0 27 30	84 317 2·215	0 29 33·1
28 56	·240	
30 38	116 285 2·170	″
33 35	·050	1283·531

Run + 0ᵀ·0158
I. 2; S. 3.

Chronometer Slow — 36ˢ·7.

	h m	B in.	t °	T °
At	0 0	30·16	59·6	55·7
	0 50	30·17	58·5	56·0

1888, November 22 (Morning). FINLAY.

Iris and D. M. + 18°·277. (202)

Chronometer Time.	Readings of Scale or Position Circle.		Cape Sid. Time. — Distance or Position Angle.
h m s	′ ″	′ ″	° ′
3 27 53	0 24	2 1	45 10
	0 28	1 46	
30 10	0 24	9 4	45 0
	0 26	8 43	
37 5	0 20	3 19	44 50
	0 25	2 53	
39 8	0 22	1 34	44 50
	0 29	1 8	

h m s
3 32 57·3

° ′ ″
45 0 56

Standard Stars. (204)

4 12 28	0 29	4 10	136 30
	0 21	3 55	
15 3	0 27	4 25	136 30
	0 21	4 4	
18 46	0 30	0 55	136 30
	0 25	0 35	
25 56	0 28	0 35	136 30
	0 20	0 6	

h m s
4 17 26·6

° ′ ″
136 31 56

Iris and D. M. + 18°·277. (203)

Chronometer Time.	Readings of Scale or Position Circle.		Cape Sid. Time. — Distance or Position Angle.
h m s	′ ″	′ ″	° ′
3 43 0	0 28	2 20	44 50
	0 26	1 47	
45 4	0 29	0 56	44 50
	0 22	0 26	
53 27	0 23	4 10	45 0
	0 23	3 40	
4 1 45	0 27	4 21	45 0
	0 22	3 47	

h m s
3 50 12·3

° ′ ″
44 57 16

Run in Position-Angle + 5″·5 in 10′.
I. 3; S. 3 for Observation 202; I. 3–4; S. 3 for Observations 203 and 204.

Chronometer Slow — 36ˢ·7.

	h m	B in.	t °	T °
At	3 20	30·17	57·2	55·6
	4 40	30·15	57·0	55·2

Digitized by Google

Chronometer Time.	Readings of Scale or Position Circle.	Cape Sid. Time. — Distance or Position Angle.	Chronometer Time.	Readings of Scale or Position Circle.	Cape Sid. Time. — Distance or Position Angle.
1888, November 23. GILL.					
	Iris and D. M. + 19°·324. (205)			**Iris and D. M. + 16°·247.** (206)	
h m s	r	h m s	h m s	r	h m s
3 50 59	174 227 3·999	3 53 33·4	4 0 19	16 384 3·561	4 3 9·6
52 24	·996		1 28	·586	
55 59	26 374 4·481	′	5 21	183 216 4·953	′
57 17	·489	5916·344	7 56	·920	6709·007
	Iris and D. M. + 16°·247. (207)			**Iris and D. M. + 19°·324.** (208)	
4 9 25	183 216 5·142	h m s	4 18 59	26 374 4·855	h m s
10 19	·146	4 12 16·1	23 19	·912	4 23 47·1
14 42	16 384 3·120	′	25 45	174 227 3·399	′
17 4	·039	6705·480	29 31	·360	5921·459
Run + 0r·0147. I. 2; S. 2–3.		Chronometer Slow — 36s·4.		B / t / T	
			At h m 3 48	in. 30·15 / ° 57·3 / ° 55·4	
			4 32	30·15 / 56·8 / 55·0	
1888, November 24. FINLAY.					
	Iris and D. M. + 19°·324. (209)			**Iris and D. M. + 16°·247.** (210)	
h m s	r	h m s	h m s	r	h m s
3 18 2	178 222 5·528	3 23 27·3	3 36 37	22 378 5·809	3 40 14·5
20 27	·555		38 56	·743	
27 17	22 379 3·027	′	41 58	178 223 2·823	′
30 29	·295	6262·798	45 53	3·033	6248·943
	Iris and D. M. + 16°·247. (211)			**Iris and D. M. + 19°·324.** (212)	
3 47 45	178 223 3·064	h m s	4 3 52	22 379 3·902	h m s
49 3	·102	3 50 3·8	6 12	·934	4 8 5·0
51 57	22 378 5·320	′	9 0	178 222 4·456	′
53 56	·217	6245·618	15 42	·273	6272·521
Run + 0r·0118. (209) to (211) I. 3; S. 3; (212) I. 3–4; S. 3–4 and 4.		Chronometer Slow — 36s·5.		B / t / T	
			At h m 3 15	in. 30·22 / ° 59·4 / ° 58·7	
			4 20	30·20 / 59·5 / 58·6	
1888, November 28. FINLAY.					
	Standard Stars. (213)			**Iris and D. M. + 17°·315.** (214)	
h m s	′ ″ / ′ ″ / ° ′		h m s	′ ″ / ′ ″ / ° ′	
3 19 56	0 18 / 3 56 / 136 30		3 38 59	0 24 / 9 34 / 12 10	
	0 28 / 3 55			0 20 / 9 9	
24 13	0 28 / 3 41 / 136 30	h m s	42 9	0 29 / 4 6 / 12 20	h m s
	0 25 / 3 30	3 24 37·4		0 20 / 3 37	3 43 16·6
26 45	0 20 / 9 59 / 136 20	° ′ ″	45 48	0 25 / 6 30 / 12 0	° ′ ″
	0 24 / 9 57	136 31 34		0 18 / 6 2	12 12 48
30 1	0 22 / 10 19 / 136 20		48 36	0 29 / 3 30 / 12 0	
	0 25 / 10 12			0 17 / 2 55	

Digitized by Google

Chronometer Time.	Readings of Scale or Position Circle.			Cape Sid. Time. — Distance or Position Angle.	Chronometer Time.	Readings of Scale or Position Circle.			Cape Sid. Time — Distance or Position Angle.
				1888, November 28. FINLAY (*continued*).					
	Iris and D. M. + 17°·315.			(215)		Iris and D. M. + 17°·315.			(216)
h m s	′ ″	′ ″	° ′		h m s	′ ″	′ ″		
3 55 35	0 28	8 10	12 0		4 8 42	0 31	4 12	192 20	
	0 20	7 40				0 15	3 35		
58 3	0 29	7 7	12 0	h m s	12 40	0 29	1 32	192 20	h m s
	0 18	6 29		3 58 51·9		0 19	1 3		4 13 21·9
4 0 40	0 26	10 12	12 10	° ′ ″	16 10	0 30	2 13	192 0	° ′ ″
	0 19	9 34		12 12 42		0 15	1 30		192 12 36
3 35	0 27	7 54	12 10		18 21	0 32	5 14	192 0	
	0 18	7 20				0 14	4 30		
	Iris and D. M. + 17°·315.			(217)		Iris and D. M. + 17°·315.			(218)
4 23 1	0 31	4 28	192 0		4 40 43	0 31	1 54	192 20	
	0 11	3 49				0 8	1 4		
27 41	0 30	3 41	192 0	h m s	42 44	0 31	9 14	192 10	h m s
	0 7	2 58		4 29 58·6		0 10	8 27		4 44 35·1
34 19	0 33	10 11	192 10	° ′ ″	47 44	0 33	2 24	192 0	° ′ ″
	0 6	9 26		192 11 20		0 6	1 30		192 10 6
37 19	0 31	9 42	192 10		49 35	0 34	9 49	191 50	
	0 14	9 1				0 11	8 58		
	Iris and D. M. + 17°·315.			(219)		Standard Stars.			(220)
4 51 59	0 36	10 17	191 50		5 8 6	0 34	4 57	136 30	
	0 7	9 23				0 4	4 9		
54 15	0 34	10 15	191 50	h m s	10 44	0 33	5 1	136 30	h m s
	0 9	9 24		4 55 50·9		0 4	4 17		5 11 56·6
58 14	0 34	9 22	192 10	° ′ ″	14 0	0 28	1 13	136 30	°
	0 6	8 30		192 9 48		0 2	0 32		136 32 22
5 1 21	0 32	2 20	192 20		17 22	0 32	0 59	136 30	
	0 8	1 24				0 5	0 5		

	B	t	T
h m	in.	°	°
At 3 15	30·05	58·8	56·6
5 25	30·03	57·0	53·9

Run in Position-Angle + 2″ in 10′.
(213)-(217) I. 2–3 and 3; S. 3; (218)-(219) I. 2 and 2–3; S. 3; (220) I. 2–3; S. 3–4.
NOTE.—The webs of the scale micrometer were accidentally broken during the day, so that distances could not be measured.
Chronometer Slow — 36ˢ·4.

1888, November 29. GILL.

	Iris and D. M. + 17°·315.			(221)		Iris and D. M. + 17°·315.			(222)
h m s		r		h m s	h m s		r		h m s
2 45 53		114 286	2·220	2 49 23·5	2 58 45		85 314	5·790	3 1 13·5
48 25			·193		3 0 13			·809	
50 1		85 315	2·100	″	1 36		114 286	2·643	″
55 42			1·898	1161·640	6 47			·828	1158·036

Digitized by Google

1888, November 29. GILL (*continued*).

Standard Stars. (223)

Chronometer Time.	Readings of Scale or Position Circle.	Cape Sid. Time. — Distance or Position Angle.
h m s	r	
3 11 39	181 219 4·107	h m s
13 23	·163	3 13 51·5
15 55	18 381 4·485	"
16 56	·369	6516·884

Iris and D. M. + 17°·315. (224)

Chronometer Time.	Readings of Scale or Position Circle.	Cape Sid. Time. — Distance or Position Angle.
h m s	r	
3 21 3	85 314 5·165	h m s
22 8	·085	3 22 14·0
23 25	114 286 3·329	"
24 47	·350	1151·599

Iris and D. M. + 17°·315. (225)

Chronometer Time.	Readings of Scale or Position Circle.	Cape Sid. Time. — Distance or Position Angle.
h m s		h m s
3 25 56	114 286 3·400	3 27 5·2
26 54	·453	"
28 24	85 314 4·906	1150·020
29 34	·890	

Iris and D. M. + 17°·315. (226)

Chronometer Time.	Readings of Scale or Position Circle.			Cape Sid. Time. — Distance or Position Angle.
h m s	′ ″	′ ″	° ′	
3 32 12	0 29	8 20	192 20	
	0 22	8 0		h m s
35 11	0 30	8 55	192 20	3 35 36·2
	0 20	8 30		° ′ ″
37 44	0 30	8 12	192 40	192 37 56
	0 16	7 43		
39 45	0 30	8 35	192 40	
	0 18	8 8		

Iris and D. M. + 17°·315. (227)

Chronometer Time.	Readings of Scale or Position Circle.			Cape Sid. Time. — Distance or Position Angle.
h m s	′ ″	′ ″	° ′	
3 42 12	0 32	7 24	192 40	
	0 18	6 56		h m s
44 16	0 32	8 35	192 40	3 45 8·2
	0 18	8 0		° ′ ″
47 17	0 37	7 28	192 20	192 37 18
	0 15	6 53		
49 15	0 35	8 23	192 20	
	0 15	7 48		

Standard Stars. (228)

Chronometer Time.	Readings of Scale or Position Circle.			Cape Sid. Time. — Distance or Position Angle.
h m s	′ ″	′ ″	° ′	
3 56 42	0 38	0 54	316 30	
	0 12	0 0		h m s
4 0 34	0 35	1 20	316 30	4 0 31·2
	0 14	0 25		° ′ ″
2 36	0 36	4 29	316 30	316 31 54
	0 12	3 33		
4 40	0 38	4 19	316 30	
	0 12	3 20		

Iris and D. M. + 17°·315. (229)

Chronometer Time.	Readings of Scale or Position Circle.			Cape Sid. Time. — Distance or Position Angle.
h m s	′ ″	′ ″	° ′	
4 8 54	0 37	5 20	12 40	
	0 9	4 20		h m s
11 39	0 41	6 11	12 40	4 12 2·0
	0 10	5 12		° ′ ″
13 47	0 41	8 27	12 20	12 36 18
	0 10	7 23		
16 15	0 40	8 50	12 20	
	0 6	7 50		

Iris and D M. + 17°·315. (230)

Chronometer Time.	Readings of Scale or Position Circle.			Cape Sid. Time. — Distance or Position Angle.
h m s	′ ″	′ ″	° ′	
4 18 24	0 42	9 33	12 20	
	0 7	8 33		h m s
20 55	0 43	10 55	12 20	4 21 37·5
	0 6	9 50		° ′ ″
23 27	0 43	6 32	12 40	12 38 14
	0 6	5 25		
26 11	0 41	9 37	12 40	
	0 6	8 29		

		B	t	T
	h m	in.	°	°
Run, Distances + 0r·0160.	At 2 40	30·05	59·2	58·6
Run, Position-Angles + 2″ in 10′.	4 30	30·05	49·4	58·2

(221) and (222) I. 2–3 ; S. 3 ; (223) I. 2–3 ; S. 3–4 ; (224) and (225) I. 2 ; S. 2–3 ; (226) (227) (229) (230) I. 2 ; S. 2 ; (228) I. 2 ; S. 3.
Chronometer Slow — 36s·8.

Digitized by Google

Chronometer Time.	Readings of Scale or Position Circle.	Cape Sid. Time. — Distance or Position Angle.	Chronometer Time.	Readings of Scale or Position Circle.	Cape Sid. Time. — Distance or Position Angle.
	1888, November 30. FINLAY.				
	Iris and D. M. + 17°·315. (231)			Iris and D. M. + 17°·315. (232)	
h m s	r	h m s	h m s	r	h m s
1 45 49	109 291 1·961	1 48 41·7	1 54 44	90 310 2·302	2 0 7·7
47 38	·986	"	57 40	·260	"
50 39	90 310 2·380	763·895	2 4 23	109 291 2·486	760·667
53 8	·397		6 11	·530	
	Iris and D. M. + 17°·315. (233)			Iris and D. M + 17°·315. (234)	
2 8 12	109 291 2·586	h m s	2 15 19	90 309 5·649	h m s
9 45	·602	2 10 7·7	18 57	·540	2 19 31·0
11 40	90 309 5·768	"	21 48	109 291 2·975	"
13 21	·742	757·689	24 27	·933	755·072
	Standard Stars. (235)			Standard Stars. (236)	
2 29 40	181 219 3·978	h m s		′ ″ ′ ″ ° ′	
32 49	4·043	2 34 31·2	3 39 14	0 34 1 0 136 30	
37 35	18 381 4·492	"		1 39 1 53	
40 28	·447	6517·725	41 47	0 36 1 6 136 30	h m s
				1 37 2 0	3 45 58·5
			48 46	0 37 4 0 136 30	° ′ ″
				1 37 4 52	136 31 58
			56 34	0 34 4 30 136 30	
				1 36 5 17	

Run for Distances + 0r·0138.
" for Position-Angles + 2″ in 10′.
I. 2–3; S. 2–3.
Note.—After Observation of Standard Stars at 3h. 56m. 34s. sky clouded up.
Chronometer Slow — 36s·8.

	B	t	T
h m	in.	°	°
At 1 40	29·95	61·5	59·9
2 45	29·93	61·0	49·4
3 35	29·91	61·0	60·0

Chronometer Time.	Readings of Scale or Position Circle.	Cape Sid. Time. — Distance or Position Angle.	Chronometer Time.	Readings of Scale or Position Circle.	Cape Sid. Time. — Distance or Position Angle.
	1888, December 2. FINLAY.				
	Iris and D. M. + 17°·315. (237)			Iris and D. M. + 17°·315. (238)	
h m s	° ′ ′	h m s	h m s	° ′ ′	h m s
2 47 45	111 51 50·5	2 49 19·6	2 53 22	110 41 40·5	2 55 0·6
49 9	57 56·5	° ′ ″	54 41	43·5 43	° ′ ″
51 0	110 32 31	111 13 4	56 23	112 29·5 29	111 38 11
51 55	33·5 33		58 7	39·5 39·5	
	Iris and D. M. + 17°·315. (239)			Iris and D. M. + 17°·315. (240)	
3 0 6	112 47 46·5	h m s	3 7 48	111 34 33·5	h m s
2 9	54 53·5	3 2 29·3	8 38	44 44	3 9 3·6
4 5	111 27·5 27	° ′ ″	10 11	113 29·5 29	° ′ ″
6 8	30 30	112 9 26	12 8	37 36·5	112 35 56

Digitized by Google

Chronometer Time.	Readings of Scale or Position Circle.	Cape Sid. Time. — Distance or Position Angle.	Chronometer Time.	Readings of Scale or Position Circle.	Cape Sid. Time. — Distance or Position Angle.
	1888, December 2. FINLAY (*continued*).				
	Iris and D. M. + 17°·315. (241)			Iris and D. M. + 17°·315. (242)	
h m s	° ′ ′	h m s	h m s	° ′ ′	h m s
3 15 4	113 55 54·5	3 16 54·6	3 20 59	112 32 32	3 22 8·1
16 17	56 55·5	° ′ ″	21 54	31½ 30½	° ′ ″
18 39	112 25 24	113 11 26	23 35	114 34 33½	113 31 37
20 9	31 30·5		24 35	30 29½	
	Standard Stars. (243)			Standard Stars. (244)	
	′ ″ ′ ″ ° ′			r	h m s
3 29 4	0 30 4 4 136 30		3 44 20	18 381 4·374	3 47 58·6
	1 46 5 10		47 2	·340	″
31 11	0 29 3 44 136 30	h m s	50 56	181 219 4·276	6515·912
	1 43 4 50	3 32 10·3	52 7	·240	
33 50	0 34 0 36 136 30	° ′ ″			
	1 45 1 39	136 31 38			
37 7	0 31 10 10 136 20				
	1 41 11 39				
	Iris and D. M. + 17°·315. (245)			Iris and D. M. + 17°·315. (246)	
	r				
3 56 58	102 297 5·394	h m s	4 7 23	97 303 3·283	h m s
58 39	·420	3 59 31·1	8 39	·297	4 8 46·1
4 0 41	97 303 3·170	″	9 52	102 297 5·224	″
4 17	·210	209·392	11 41	·189	210·897
	Iris and D. M. + 17°·315. (247)			Iris and D. M. + 17°·315. (248)	
4 13 42	102 297 5·163	h m s	4 21 49	97 303 3·410	h m s
15 57	·177	4 16 21·8	23 12	·459	4 24 11·1
18 26	97 303 3·417		25 32	102 297 5·086	
19 53	·413	211·711	28 42	·015	212·410
	Iris and D. M. + 17°·315. (249)			Iris and D. M. + 17°·315. (250)	
4 33 20	102 297 4·923	h m s	4 39 40	97 303 3·643	h m s
34 50	·897	4 35 4·3	42 9	·686	4 43 9·1
36 31	97 303 3·584	″	45 39	102 297 4·866	″
38 7	·680	214·107	47 39	·807	214·639

		B	t	T
	h m	in.	°	°
	At 2 45	30·12	62·4	58·3
	3 40	30·12	60·9	56·9
	4 50	30·10	60·0	56·1

Run, Distances + 0r·00081.
„ Position-Angles + 2″ in 10′.
(237) to (242) I. 1–2; S. 2–3; (243) I. 1–2; S. 3; (244) I. 2–3; S. 3–4; (245) to (248) I. 2–3; S. 3; (249) I. 2; S. 3; (250) I. 3; S. 3.
Chronometer Slow — 37ᵐ·7.

Digitized by Google

Chronometer Time.	Readings of Scale or Position Circle.	Cape Sid. Time. — Distance or Position Angle.	Chronometer Time.	Readings of Scale or Position Circle.	Cape Sid. Time. — Distance or Position Angle.
1888, December 3. GILL.					
	Iris and D.M. + 17°·315. (251)			Iris and D. M. + 17°·315. (252)	
h m s	r	h m s	h m s	r	h m s
3 0 11	106 294 3·420	3 4 7·3	3 14 0	93 306 5·378	3 15 28·8
1 48	·339	"	14 49	·459	"
6 18	93 306 5·203	510·299	16 30	106 294 3·030	512·918
10 45	·209		19 9	·113	
	Standard Stars. (253)			Iris and D. M. + 17°·315. (254)	
3 22 18	181 219 3·847	m s	3 35 58	93 306 5·849	h m s
24 21	4·045	3 24 57·3	37 17	·889	3 37 51·3
27 5	18 381 (348)	"	39 36	106 294 2·440	"
28 38	·383	6517·526	41 7	·435	518·366
	Iris and D. M. + 17°·315. (255)			Iris and D. M. + 17°·315. (256)	
3 42 8	106 294 2·453	h m s	3 55 4	93 307 2·394	h m s
44 15	·350	3 45 31·6	58 3	·451	3 58 18·3
48 9	93 307 2·210	"	59 36	106 294 1·990	"
50 7	·221	520·241	4 3 3	·957	523·432
	Iris and D. M. + 17°·315. (257)			Iris and D. M. + 17°·315. (258)	
4 5 3	106 294 1·871	h m s	4 16 16	93 307 2·799	h m s
10 11	106 293 5·735	4 9 55·6	21 21	·917	4 22 3·1
11 35	93 307 2·697	"	23 46	106 293 5·420	"
15 26	·769	525·829	29 22	·258	528·769

	B	t	T
h m	in.	°	°
At 2 55	30·11	62·8	62·2
4 32	30·10	63·2	62·4

Run + or ·0111.
Definition throughout very bad. Measures were made only by glimpses when I. 3; S. 3. At last obliged to give up, as images became mere nebulous balls, never sharpening up sufficiently to be observable.
Chronometer Slow — 38s·2.

1888 December 4. FINLAY.

	Iris and D. M. + 17°·315. (259)			Iris and D. M. + 16°·247. (260)	
m s	r	h m s	h m s	r	h m s
3 11 21	111 290 2·794	3 19 28·7	3 30 23	71 329 4·464	3 35 10·7
19 52	·637	"	35 18	·321	"
23 57	89 312 1·913	878·176	36 58	129 272 4·103	2306·891
25 20	·980		40 39	·114	

Digitized by Google

Chronometer Time.	Readings of Scale or Position Circle.	Cape Sid. Time. — Distance or Position Angle.	Chronometer Time.	Readings of Scale or Position Circle.	Cape Sid. Time. — Distance or Position Angle.
1888, December 4. FINLAY (*continued*).					
	Iris and D. M. + 16°·247. (261)			Iris and D. M. + 17°·315. (262)	
h m s	r	h m s	h m s	r	h m s
3 45 52	129 272 4·180	3 51 20·5	4 33 6	89 312 3·511	4 56 35·7
47 10	128 271 4·440	"	5 3 46	88 311 4·350	"
55 48	71 329 3·882	2303·454	5 33	111 289 4·074	901·401
59 7	·935		6 33	·064	

	h m	B in.	t °	T °
	At 3 10	30·06	67·7	66·0
	5 10	30·04	66·4	65·1

Run + 0r·0118

(259) I. 3 ; S. 3 ; (260) I. 3-4 ; S. 3 ; (261) I. 3 ; S. 3 ; cloud between (261) and (262) and delay by cloud after first pointing in (262). I. 3 ; S. 2-3 when seen. Chronometer Slow —38s·8.

1888, December 5. GILL.

	Iris and D. M. + 17°·315. (263)			Iris and D. M. + 16°·247. (264)	
h m s	r		h m s	r	
3 3 51	115 285 2·460	h m s	3 14 33	75 324 4·960	h m s
5 32	·384	3 6 1·4	17 9	·883	3 18 17·4
7 35	84 316 2·119	"	20 23	124 276 3·617	"
9 44	·121	1241·330	23 41	·714	1950·798
	Iris and D. M. + 16°·247. (265)			Iris and D. M. + 17°·315. (266)	
3 24 39	124 276 3·715	h m s	3 39 25	84 316 2·870	h m s
26 6	·766	3 27 33·7	41 6	·929	3 41 15·7
28 49	75 324 4·613	"	42 11	115 284 5·471	"
33 17	·495	1918·569	44 57	·480	1249·922
	Iris and D. M. + 17°·315. (267)			Iris and D. M. + 16°·247. (268)	
3 46 24	115 284 5·436	h m s	4 0 26	76 325 3·867	h m s
49 1	·357	3 49 30·7	1 20	·840	4 4 43·2
50 45	84 316 3·170	"	7 39	124 276 4·710	"
54 29	·260	1251·904	12 4	·813	1939·957
	Iris and D. M. + 16°·247. (269)			Iris and D. M. + 17°·315. (270)	
4 16 4	124 276 4·950	h m s	4 31 39	84 316 4·121	h m s
17 8	5·048	4 18 24·2	34 24	·110	4 34 33·2
18 27	76 325 3·388	"	36 19	115 284 4·146	"
24 34	·325	1936·267	38 27	·193	1262·606

	h m	B in.	t °	T °
	At 3 0	30·04	67·2	65·4
	4 40	30·04	66·3	64·4

Run + 0r·0141.

(263) to (265) I. 2 ; S. 3 ; (267) to (270) I. 2-3 and 3 ; S. 2-3. Occasionally much delay by the images becoming diffused. Chronometer Slow — 39s·1.

Digitized by Google

1888, December 6. FINLAY.

Iris and D. M. + 17°·315. (271)

Chronometer Time.	Readings of Scale or Position Circle.	Cape Sid. Time. — Distance or Position Angle.
h m s	r	h m s
2 58 35	120 281 2·230	3 0 30·6
3 0 2	·166	
2 21	80 321 2·384	
3 42	·408	1604·649

Iris and D. M. + 16°·247. (272)

Chronometer Time.	Readings of Scale or Position Circle.	Cape Sid. Time. — Distance or Position Angle.
h m s	r	h m s
3 6 21	80 320 5·015	3 7 57·6
7 43	4·970	
9 22	120 281 3·497	
11 2	·536	1591·034

Iris and D. M. + 16°·247. (273)

Chronometer Time.	Readings of Scale or Position Circle.	Cape Sid. Time. — Distance or Position Angle.
3 12 3	120 281 3·558	h m s
13 1	·590	3 15 0·1
18 2	80 320 4·726	
19 32	·724	1589·400

Iris and D. M. + 17°·315. (274)

Chronometer Time.	Readings of Scale or Position Circle.	Cape Sid. Time. — Distance or Position Angle.
3 22 47	80 321 2·910	h m s
32 45	3·145	3 27 6·6

Sky clouded up.

Run + 0ᵐ·0125

	h m	B in.	t	T
At	2 55	30·16	66°·1	60°·3
	5 0	30·15	63°·0	61°·0

I. 1-2 ; S. 1-2. The two pointings of (274) not so good as the preceding observations because the images became very faint.
Chronometer Slow — 39ˢ·4.

1888, December 7. GILL.

Iris and D. M. + 17°·315. (275)

Chronometer Time.	Readings of Scale or Position Circle.	Cape Sid. Time. — Distance or Position Angle.
h m s	r	h m s
3 14 10	75 325 2·968	3 16 10·1
15 57	3·030	
17 53	124 275 5·392	
19 22	·375	1972·525

Iris and D. M. + 17°·247. (276)

Chronometer Time.	Readings of Scale or Position Circle.	Cape Sid. Time. — Distance or Position Angle.
h m s	r	h m s
3 21 51	115 285 4·382	3 24 11·9
22 41	·297	
26 45	84 315 3·929	
28 12	·980	1220·893

Iris and D. M. + 16°·247. (277)

Chronometer Time.	Readings of Scale or Position Circle.	Cape Sid. Time. — Distance or Position Angle.
3 30 9	84 315 3·868	h m s
33 16	·760	3 32 58·1
34 48	115 285 4·689	
36 21	·669	1218·477

Iris and D. M. + 17°·315. (278)

Chronometer Time.	Readings of Scale or Position Circle.	Cape Sid. Time. — Distance or Position Angle.
3 40 25	124 275 4·856	h m s
41 11	·852	3 42 8·9
42 43	75 325 3·579	
46 58	·701	1978·419

Iris and D. M. + 17°·315. (279)

Chronometer Time.	Readings of Scale or Position Circle.	Cape Sid. Time. — Distance or Position Angle.
3 48 31	75 325 3·700	h m s
49 36	·810	3 51 13·4
54 17	124 275 4·494	
55 11	·579	1980·594

Iris and D. M. + 16°·247. (280)

Chronometer Time.	Readings of Scale or Position Circle.	Cape Sid. Time. — Distance or Position Angle.
4 1 40	115 285 5·299	h m s
3 51	·343	4 6 29·6
9 56	85 316 2·846	
13 13	·843	1210·357

Digitized by Google

Chronometer Time.	Readings of Scale or Position Circle.	Cape Sid. Time. — Distance or Position Angle.
1888, December 7. GILL (*continued*).		
Iris and D. M. + 16°·247. (281)		
h m s	r	h m s
4 15 0	85 316 2·724	4 17 46·4
15 49	·756	
20 17	115 285 5·829	″
22 41	·879	1207·147
Iris and D. M. + 17°·315. (282)		
h m s	r	h m s
4 25 43	125 276 3·877	4 30 56·6
30 3	·732	
34 52	75 325 4·804	″
35 50	·845	1989·714

Run + 0ʳ·0167.
(275) to (278) I. 2 ; S. 2–3 ; (279) to (282) I. 2–3 ; S. 2–3.
Chronometer Slow — 40ˢ·4.

	h m	B in.	t °	T °
At	3 12	30·18	63·3	61·7
	4 40	30·16	63·0	60·8

1888, December 8. FINLAY.

Standard Stars. (283)		
h m s	r	h m s
2 53 55	181 219 4·109	2 57 41·2
56 15	·025	
59 21	18 381 4·413	″
3 3 57	·453	6517·257
Iris and D. M. + 16°·247. (284)		
h m s	r	h m s
3 8 38	89 311 3·459	3 11 38·5
9 56	·401	
14 4	110 289 5·158	″
16 39	·300	852·983
Iris and D. M. + 16°·247. (285)		
3 18 26	110 289 5·315	3 25 26·5
20 32	·367	
21 58	89 311 3·100	″
43 33	2·615	849·537
Iris and D. M. + 16°·247. (286)		
4 0 20	89 311 2·197	4 10 26·0
10 48	1·925	
14 15	110 290 2·622	″
19 4	·804	838·677
Iris and D. M. + 16°·247. (287)		
4 20 22	110 290 2·816	4 22 15·0
21 56	·870	
23 49	89 310 5·550	″
25 36	·477	835·375

Run + 0ʳ·0130
(283) I. 2 ; S. 2–3 ; (284) and (285) I. 1–2 ; S. 1–2, but stars faint through thin cloud ;
(286) and (287) I. 2 ; S. 2.
Chronometer Slow — 40ˢ·8.

	h m	B in.	t °	T °
At	2 50	30·27	61·9	59·7
	3 45	30·27	62·4	61·0
	4 28	30·26	62·1	59·1

1888, December 9. GILL.

Iris and D. M. + 16°·247. (288)		
m	r	h m s
46 12	106 295 2·953	3 47 33·1
47 45	·870	
49 4	94 306 5·381	″
49 58	·429	473·590
Standard Stars. (289)		
h m s	r	h m s
3 54 39	18 381 4·244	3 56 45·3
56 58	·170	
58 24	181 219 4·154	″
59 47	·214	6515 530

Digitized by Google

Chronometer Time.	Readings of Scale or Position Circle.	Cape Sid. Time. — Distance or Position Angle.	Chronometer Time.	Readings of Scale or Position Circle.	Cape Sid. Time. — Distance or Position Angle.
1888, December 9. GILL (*continued*).					
Iris and D. M. + 16°·247. (290)			Iris and D. M. + 16°·247. (291)		
h m s	r	h m s	h m s	r	h m s
4 2 33	106 295 3·303	4 5 11·1	4 10 47	94 306 4·935	4 13 24·6
4 1	·343		12 6	·809	
8 7	94 306 4·942	″	14 28	106 295 3·589	″
8 50	·956	469·229	19 4	105 294 3·729	467·156
Iris and D. M. + 16°·247. (292)			Iris and D. M. + 16°·247. (293)		
4 20 41	105 294 3·790	4 22 8·3	4 27 7	94 306 4·494	4 30 53·3
21 51	·803		30 17	·460	
23 24	94 306 4·613	″	32 0	105 294 4·056	″
25 24	·510	464·907	36 56	·210	462·789

Run + 0ʳ·0126.
(288) I. 2 ; S. 2 ; (289) I. 2–3 : S. 3–4 ; (290) to (293) I. 2–3 ; S. 2–3.
Chronometer Slow — 41ᵐ·7.

	h m	B in.	t °F	T °F
At	3 0	30·04	66·3	65·0
	4 40	30·02	66·2	64·7

1888, December 10. GILL.

Iris and D. M. + 16°·247. (294)			Iris and D. M. + 16°·247. (295)		
h m s	r	h m s	h m s	r	h m s
3 19 11	102 298 4·104	3 22 5·2	3 27 22	97 302 4·246	3 29 30·9
21 24	·137		29 36	·190	
24 37	97 302 4·310	″	31 28	102 298 4·217	″
25 57	·237	181·189	32 26	·263	180·309
Iris and D. M. + 16°·247. (296)			Iris and D. M. + 16°·247. (297)		
3 34 13	102 298 4·265	3 36 4·7	3 41 16	98 303 4·140	3 43 20·7
35 16	·300		42 50	·135	
37 54	98 303 4·164		45 37	102 298 4·340	
39 44	·123	179·678	46 28	·357	179·314
Iris and D. M. + 16°·247. (298)			Iris and D. M. + 16°·247. (299)		
3 47 40	102 298 4·370	h m s	3 54 13	97 302 4·029	h m s
48 38	·387	3 48 55·4	55 37	3·975	3 56 5·7
50 0	97 302 4·109		57 54	102 298 4·433	
52 12	·065	″	59 27	·481	178·131
		178·951			
Iris and D. M. + 16°·247. (300)			Iris and D. M. + 16°·247. (301)		
4 0 58	° ′ ′	h m s	4 7 22	° ′ ′	h m s
1 55	30 60 59½	4 2 5·2	8 38	29 38 37½	4 10 35·9
3 20	31 9 9		12 48	53 52½	
4 56	29 32 31	° ′ ″	16 24	32 25 24½	° ′ ″
	43 42½	30 20 45		52¼ 52	31 11 55

Digitized by Google

1888, December 10. GILL (*continued*).

Standard Stars. (302)

Chronometer Time.	Readings of Scale or Position Circle.		Cape Sid. Time. — Distance or Position Angle.
h m s	′ ″	′ ″	° ′
4 23 8	0 36	5 11	136 30
	0 34	5 0	
26 19	0 35	4 40	136 30
	0 27	4 25	
39 36	0 37	1 10	136 30
	0 34	0 45	
41 20	0 37	0 38	136 30
	0 32	0 18	
			h m s
			4 31 53·7
			° ′ ″
			136 32 12

Standard Stars. (303)

Chronometer Time.	Readings of Scale or Position Circle.	Cape Sid. Time. — Distance or Position Angle.
h m s	r	h m s
4 42 56	19 382 3·880	4 44 55·2
45 20	·990	′
46 47	181 219 4·564	6512·304
47 26	·540	

Iris and D. M. + 16°·247. (304)

Chronometer Time.	Readings of Scale or Position Circle.		Cape Sid. Time. — Distance or Position Angle.
h m s	° ′	′	h m s
4 51 15	215 24	24	4 56 37·7
53 53	52	51½	° ′ ″
58 4	213 27	26½	214 47 23
5 6 7	214 27	27	

Iris and D. M + 16°·247. (305)

Chronometer Time.	Readings of Scale or Position Circle.		Cape Sid. Time. — Distance or Position Angle.
h m s	° ′	′	h m s
5 7 46	214 33	32½	5 8 59·2
8 54	50	49½	° ′ ″
10 23	217 3½	3	215 53 53
11 42	10	9½	

Iris and D. M. + 16°·247. (306)

Chronometer Time.	Readings of Scale or Position Circle.		Cape Sid. Time. — Distance or Position Angle.
h m s	° ′	′	h m s
5 13 8	217 20½	20	5 14 6·9
14 12	22	21	° ′ ″
15 28	215 27	27	216 23 26
16 28	25	25	

Iris and D. M. + 16°·247. (307)

Chronometer Time.	Readings of Scale or Position Circle.		Cape Sid. Time. — Distance or Position Angle.
h m s	° ′	′	h m s
5 17 33	215 30½	30	5 18 49·7
18 49	33½	33	° ′ ″
19 59	217 56½	56	216 47 33
21 46	218 11	10½	

Iris and D. M. + 16°·247. (308)

Chronometer Time.	Readings of Scale or Position Circle.		Cape Sid. Time. — Distance or Position Angle.
h m s	° ′	′	h m s
5 22 51	218 13	12½	5 23 52·2
23 52	7½	7	° ′ ″
25 16	216 8	7½	217 8 38
26 18	6½	6½	

Iris and D. M. + 16°·247. (309)

Chronometer Time.	Readings of Scale or Position Circle.		Cape Sid. Time. — Distance or Position Angle.
h m s	° ′	′	h m s
5 27 54	216 26	25½	5 29 53·4
29 15	22	21½	° ′ ″
31 28	219 5	5	217 44 34
33 45	6	5½	

		B	t	T
	h m	in.	°	°
Run + 0r·0113.	At 3 15	29·87	63·6	60·0
„ Position-Angles + 2″ in 10′ (adopted).	5 40	29·85	60·0	59·3

(294) to (299) I. 1–2; S. 1–2. (300) and (301) I. 1–2; S. 1–2; but stars apparently fainter than 9th mag. by haze. (302) and (303) I. 1–2; S. 3. During (304) sky was quite overcast after second pointing, and again after the third pointing. When the sky finally cleared and during the Observations 305 to 309 the definition was perfect: I. 1; S. 1.

Chronometer Slow — 42s·1.

Digitized by Google

YALE

OBSERVATIONS OF IRIS

IN

1888.

Digitized by Google

YALE HELIOMETER OBSERVATIONS OF IRIS.

OBSERVER: ELKIN.

1888, October 10. Telescope W.

Star.	Chronometer.	Micrometer.	Means.
°	h m s		h m s
+ 24·376	8 24 33	+ 0·795	8 27 35
	25 32	51 51·5	r
	26 16	+ 0·766	91·917·
	26 57	54 55	h m s
	27 58	47 47·5	8 27 37
	28 49	— 0·832	° ′ ″
	30 3	42 42	14 48 45
	30 41	— 0·894	
			h m s
+ 24·376	8 32 40	— 0·904	8 35 27
	33 27	49 50	r
	34 4	— 0·896	91·780·
	34 47	45 46	h m s
	36 19	60 60·5	8 35 30
	36 50	+ 0·700	° ′ ″
	37 29	59·5 60	14 53 45
	38 13	+ 1·661	
			h m s
Standards.	22 6 32	+ 0·714	22 10 55
	7 15	1 14 2 20	r
		3 48 4 1	513·824·
	9 11	+ 0·725	
	9 43	0 50 2 10	
		3 29 3 58	h m s
	11 21	9 5 2 10	22 10 28
		1 45 3 57	° ′ ″
	12 39	— 0·896	45 58 13
	13 35	7 53 1 18	
		1 32 3 57	
	15 18	— 0·894	
			h m s
°			
+ 24·376	8 59 50	— 1·176	9 3 10
	9 1 21	8 8	r
	2 6	— 1·214	91·214·
	2 56	6 6	h m s
	3 46	13 13	9 3 23
	4 49	+ 1·409	° ′ ″
	5 28	12 12	195 19 45
	5 56	+ 1·410	

1888, October 10. Telescope W.—*continued.*

Star.	Chronometer.	Micrometer.	Means.
°	h m s		h m s
+ 24·376	9 7 19	+ 1·390	9 10 2
	8 0	16 16	r
	8 36	+ 1·386	91·071
	9 29	17 17	h m s
	10 20	16 16	9 10 0
	11 11	— 1·278	° ′ ″
	12 12	11 10·5	195 14 56
	13 4	— 1·356	

At Beginning, Thermometer 37°·5. Barometer 759 mm.
„ End „ 37·5. „ 759 „
Chronometer Correction, + 0s. Run — 0·7.

1888, October 10. Telescope E.

Star.	Chronometer.	Micrometer.	Means.
°	h m s		h m s
+ 24·376	17 1 10	— 1·100	17 4 20
	2 19	56 57	r
	2 50	— 1·110	81·339·
	3 48	56·5 57	
	4 46	6 6	h m s
	5 56	+ 1·459	17 4 23
	6 39	3 3	° ′ ″
	7 18	+ 1·430	201 0 34
			h m s
+ 24·376	17 8 8	+ 1·430	17 10 22
	8 43	11 10·5	r
	9 11	+ 1·436	81·238
	10 1	6 6	
	10 51	2 1	h m s
	11 23	— 1·180	17 10 27
	12 11	1 0	° ′ ″
	12 47	— 1·210	201 4 41

Digitized by Google

1888. October 10. Telescope E.—*continued.*

Star.	Chronometer.	Micrometer.	Means.
	h m s		h m s
Standards.	6 39 34	— 0·810	6 43 27
	40 29	6 56 1 42	r
		9 5 3 45	514·049·
	41 46	— 0·784	
	42 29	5 16 9 47	
		8 1 2 40	
	44 10	6 50 9 54	
		9 32 2 43	h m s
	45 21	+ 0·843	6 43 16
	45 58	7 37 0 50	° ′ ″
		9 24 2 39	225 56 5
	47 9	+ 0·850	
			h m s
° + 24·376	17 29 16	+ 1·260	17 32 24
	30 7	27 28	r
	31 0	+ 1·255	80·823·
	32 1	24 26	
	33 3	22 23	h m s
	33 52	— 1·450	17 32 30
	34 48	21 23	° ′ ″
	35 29	— 1·418	21 24 34
			h m s
+ 24·376	17 36 6	— 1·434	17 39 5
	37 11	24 26·5	r
	37 44	— 1·457	80·717
	38 30	27 29	
	39 42	33 35·5	h m s
	40 21	+ 1·175	17 39 11
	41 22	31 32	° ′ ″
	42 11	+ 1·150	21 29 49

At Beginning, Thermometer 31°·5.
„ End „ 32·5. Barometer 759·0 m·m.
Chronometer Correction, + 0s. [illegible] m → 1·2.

1888, October 11. Telescope W.

Star.	Chronometer.	Micrometer.	Means.
°	h m s		h m s
+ 24·376	8 6 17	— 0·810	8 12 3
	6 59	26 27	r
	7 37	— 0·720	68·066·
	12 11	31 32	h m s
	13 1	40 41	8 12 34
	15 13	+ 0·884	° ′ ″
	18 0	39 39·5	35 34 26
	19 5	+ 0·779	

1888, October 11. Telescope W.—*continued.*

Star.	Chronometer.	Micrometer.	Means.
°	h m s		h m s
+ 24·376	8 21 53	+ 0·822	8 29 0
	27 20	51 52	r
	29 18	+ 0·758	67·887·
	30 5	56 57	
	31 1	61 61	h m s
	31 34	— 0·897	8 30 14
	32 30	52 52	° ′ ″
	33 15	— 0·908	215 55 15
			h m s
Standards.	23 9 42	+ 0·859	23 14 6
	10 27	3 28 5 20	r
		1 33 3 28	514·043
	11 19	+ 0·822	
	12 30	3 58 5 22	
		2 0 3 30	h m s
	14 22	8 33 0 59	23 13 33
		0 54 3 20	° ′ ″
	16 18	— 0·805	225 57 46
	16 54	8 19 1 18	
		0 12 3 26	
	18 25	— 0·790	
			h m
° + 24·376	9 56 26	— 1·400	9 59 21
	57 36	39· 39·	r
	58 36	— 1·495	66·685·
	59 17	42 42·5	
	59 50	51·5 51·5	h m s
	10 0 28	+ 1·147	9 59 28
	1 10	46 46·5	° ′ ″
	1 56	+ 1·118	217 44 52
			h m s
+ 24·376	10 3 32	+ 1·164	10 6 16
	4 19	58 59	r
	5 7	+ 1·132	66·640·
	5 58	57 57	
	6 40	54 55·5	h m s
	7 22	— 1·520	10 6 20
	8 23	51 52	° ′ ″
	9 3	— 1·495	37 55 26

At Beginning, Thermometer 43°·5.
„ End „ 43·5 Barometer 756·5 mm.
Chronometer Correction, + 1s.

Digitized by Google

1888, October 15. Telescope W.				1888, October 16. Telescope W.			
Star.	Chronometer.	Micrometer.	Means.	Star.	Chronometer.	Micrometer.	Means.
°	h m s		h m s	°	h m s		h m s
+ 24·358	11 55 31	− 0·610	11 57 17	+ 22·372	8 13 42	+ 1·320	8 17 22
	56 43	− 0·595	r		14 31	+ 1·291	r
	58 0	+ 0·920	424·338		15 57	− 1·207	335·056
	58 55	+ 0·961			25 20	− 1·291	
			h m s				h m s
+ 22·372	12 2 29	+ 1·079	12 4 25	+ 24·358	8 26 40	− 1·237	8 27 51
	3 41	+ 1·150	r		27 20	− 1·180	r
	5 10	− 0·511	342·593		28 23	+ 1·379	413·178
	6 21	− 0·531			29 3	+ 1·394	
			h m s				h m s
+ 22·372	12 7 13	− 0·529	12 8 47	+ 24·358	8 29 48	+ 1·340	8 31 3
	8 2	− 0·522	r		30 38	+ 1·390	r
	9 33	+ 1·083	342·557		31 35	− 1·225	413·123
	10 20	+ 1·083			32 12	− 1·258	
			h m s				h m s
+ 24·358	12 12 45	+ 0·881	12 14 27	+ 22·372	8 33 47	− 1·296	8 36 30
	13 36	+ 0·900	r		35 13	− 1·229	r
	15 17	− 0·710	424·178		37 20	+ 1·340	335·077
	16 11	− 0·714			38 42	+ 1·339	
			h m s				h m s
+ 24·358	12 19 4	− 0·741	12 21 12	+ 22·372	8 53 9	+ 1·276	8 54 15
	20 21	− 0·765	r		53 48	+ 1·308	r
	21 48	+ 0·838	424·071		54 35	− 1·280	335·012
	23 33	+ 0·811			55 27	− 1·280	
			h m s				h m s
+ 22·372	12 25 42	+ 1·021	12 27 26	+ 24·358	8 56 40	− 1·369	8 58 32
	26 51	+ 1·033	r		58 15	− 1·269	r
	28 4	− 0·566	342·443		59 13	+ 1·230	412·905
	29 5	− 0·601			59 59	+ 1·218	
			h m s				h m s
+ 22·372	12 30 29	− 0·628	12 32 8	+ 24·358	9 0 59	+ 1·212	9 2 3
	31 27	− 0·628	r		1 35	+ 1·230	r
	32 50	+ 0·982	342·358		2 25	− 1·282	412·871
	33 45	+ 0·982			3 12	− 1·417	
			h m s				h m s
+ 24·358	12 36 37	+ 0·746	12 38 27	+ 22·372	9 5 9	− 1·348	9 6 38
	37 30	+ 0·714	r		5 49	− 1·266	r
	39 12	− 0·854	423·878		7 15	+ 1·330	334·973
	40 27	− 0·850			8 20	+ 1·241	
							h m s
				+ 24·358	11 23 50	+ 0·624	11 25 13
					24 55	+ 0·630	r
					25 46	− 0·972	411·657
					26 23	− 0·966	

At Beginning, Thermometer 41°·5.
„ End „ 40°·5. Barometer 761 mm.
Chronometer Correction, + 4ˢ. Run + 0·0.

Digitized by Google

1888, October 16. Telescope W.—*continued.*

Star.	Chronometer.	Micrometer.	Means.
°	h m		h m s
+ 22·372	11 27 47	— 1·417	11 29 8
	28 26	— 1·399	r
	29 45	+ 1·157	334·767
	30 34	+ 1·193	
			h m s
+ 22·372	11 31 11	+ 1·160	11 32 25
	32 2	+ 1·160	r
	32 57	— 1·380	334·762
	33 30	— 1·416	
			h m s
+ 24·358	11 35 59	— 0·998	11 37 1
	36 36	— 0·977	r
	37 22	+ 0·552	411·570
	38 8	+ 1·562	

At Beginning, Thermometer 44°·5. Barometer 761 mm.
„ End „ 46·5. „ 760 „
Chronometer Correction, + 5ˢ·5.

1888, October 17. Telescope W.

Star.	Chronometer.	Micrometer.	Means.
°	h m s		h m s
+ 24·358	7 56 7	— 1·310	7 57 59
	57 15	— 1·264	r
	58 49	+ 1·314	405·022
	59 46	+ 1·304	
			h m s
+ 22·372	8 1 23	+ 1·072	8 2 39
	2 19	+ 1·053	r
	3 6	— 1·500	332·531
	3 50	— 0·562	
			h m s
+ 22·372	8 4 21	— 0·532	8 5 22
	4 56	— 1·477	r
	5 45	+ 1·130	332·594
	6 26	+ 1·067	
			h m s
+ 24·358	8 7 32	+ 1·281	8 8 33
	7 58	+ 1·289	„
	8 56	— 1·284	404·989
	9 48	— 1·307	

1888, October 17. Telescope W.—*continued.*

Star.	Chronometer.	Micrometer.	Means.
°	h m s		h m s
+ 24·358	8 11 33	— 1·311	8 12 38
	12 10	— 1·298	r
	13 7	+ 1·270	404·966
	13 41	+ 1·272	
			h m s
+ 22·372	8 15 6	+ 1·111	8 16 12
	15 37	+ 1·137	r
	16 41	— 1·443	332·651
	17 25	— 1·502	
			h m s
+ 22·372	8 18 11	— 1·477	8 19 24
	18 52	— 0·422	r
	19 52	+ 1·103	332·653
	20 43	+ 1·103	
			h m s
+ 24·358	8 22 1	+ 1·270	8 23 12
	22 48	+ 1·260	r
	23 33	— 1·281	404·962
	24 25	— 1·324	
			h m s
+ 24·358	8 25 38	— 1·314	8 26 46
	26 19	— 1·286	r
	27 18	+ 1·280	404·965
	27 48	+ 1·250	
			h m s
+ 22·372	8 29 11	+ 1·158	8 30 23
	29 41	+ 1·156	r
	30 33	— 1·402	332·729
	32 6	— 1·453	
			h m s
+ 22·372	8 32 34	— 1·477	8 33 48
	33 10	— 1·430	r
	34 26	+ 1·144	332·678
	35 1	+ 1·119	
			h m s
+ 24·358	8 37 51	+ 1·269	8 38 44
	38 21	+ 1·279	r
	39 9	— 1·309	404·949
	39 34	— 1·340	
			h m s
+ 24·358	10 4 1	— 1·457	10 5 11
	4 45	— 0·501	r
	5 45	+ 1·070	404·605
	6 14	+ 1·099	

Digitized by Google

1888, October 17. Telescope W.—*continued.*

Star.	Chronometer.	Micrometer.	Means.
°	h m s		h m s
+ 22·372	10 7 41	+ 1·314	10 8 56
	8 16	+ 1·324	r
	9 29	− 1·269	333·054
	10 20	− 1·261	
			h m s
+ 22·372	10 10 50	− 1·244	10 11 57
	11 19	− 1·310	r
	12 31	+ 1·299	333·026
	13 2	+ 1·307	
			h m s
+ 24·358	10 14 3	+ 1·076	10 14 57
	14 28	+ 1·080	r
	15 11	− 1·515	404·564
	16 5	− 1·512	

At Beginning, Thermometer 43°·5. Barometer 760 mm.
.. End .. 41°·5. „ 760 „
Chronometer Correction, + 6ˢ. Run − 5·0.

1888, October 18. Telescope W.

Star.	Chronometer.	Micrometer.	Means
°	h m s		h m s
+ 22·372	7 44 15	+ 1·120	7 46 2
	45 24	+ 1·095	r
	46 52	− 0·809	337·272
	47 37	− 0·801	
			h m s
+ 24·358	7 48 56	− 0·848	7 50 21
	49 58	− 0·844	r
	50 57	+ 1·068	403·266
	51 33	+ 1·157	
			h m s
+ 24·358	7 52 30	+ 1·189	7 53 33
	52 57	+ 1·057	r
	54 9	− 0·871	403·288
	54 36	− 0·798	
			h m s
+ 22·372	7 56 26	− 0·786	7 57 53
	57 7	− 0·731	r
	58 30	+ 1·248	337·476
	59 31	+ 1·221	

1888, October 18. Telescope W.—*continued.*

Star.	Chronometer.	Micrometer.	Means.
°	h m s		h m s
+ 22·372	8 1 27	+ 1·159	8 2 27
	2 0	+ 1·238	
	2 50	− 0·718	337·457
	3 31	− 0·764	
			h m s
+ 24·358	8 5 0	− 0·845	8 6 11
	5 38	− 0·790	
	6 42	+ 1·086	403·294
	7 24	+ 1·137	
			h m s
+ 24·358	8 7 52	+ 1·172	9 11
	8 28	+ 1·110	
	9 56	− 0·880	403·304
	10 30	− 0·793	
			h m s
+ 22·372	8 11 53	− 0·717	8 13 15
	12 42	− 0·678	r
	13 45	+ 1·301	337·576
	14 41	+ 1·247	
			h m s
+ 24·358	9 31 43	+ 1·188	9 32 56
	32 29	+ 1·200	r
	33 28	− 0·772	403·453
	34 6	− 1·709	
			h m s
+ 22·372	9 35 25	− 1·321	9 36 43
	36 2	− 1·243	
	37 26	+ 0·691	338·393
	37 59	+ 0·660	
			h m s
+ 22·372	9 39 0	+ 1·640	9 39 58
	39 34	+ 1·738	r
	40 22	− 1·241	338·423
	40 56	− 1·291	
			h m s
+ 24·358	9 42 46	− 1·740	9 43 46
	43 21	− 1·736	r
	44 15	+ 1·164	403·433
	44 44	+ 1·179	
			h m s
+ 24·358	9 46 27	+ 1·222	9 47 30
	46 58	+ 1·180	r
	47 59	− 0·754	403·453
	48 38	− 0·742	

Digitized by Google

1888, October 18. Telescope W.—*continued.*

Star.	Chronometer.	Micrometer.	Means.
°	h m s		h m s
+ 22·372	9 49 46	— 1·241	9 50 45
	50 10	— 1·240	r
	51 9	+ 1·747	338·488
	51 56	+ 0·711	
			h m s
+ 22·372	9 52 39	+ 1·748	9 53 37
	53 11	+ 1·770	r
	54 3	— 1·173	338·567
	54 36	— 1·210	
			h m s
+ 24·358	9 56 25	— 1·768	9 57 28
	57 9	— 1·763	r
	57 57	+ 1·177	403·423
	58 22	+ 1·200	

At Beginning, Thermometer 44°·5. Barometer 764 mm.
„ End „ 41·5. „ 764 „
Chronometer Correction, + 6ˢ. Run + 3·2.

1888, October 21. Telescope W.

Star.	Chronometer.	Micrometer.	Means.
°	h m s		h m s
+ 23·326	7 37 56	+ 1·066	7 39 54
	39 49	+ 1·031	r
	40 31	— 0·878	329·137
	41 19	— 0·945	
			h m s
+ 22·368	7 51 20	— 0·788	7 52 35
	52 6	— 0·810	r
	53 2	+ 1·127	301·374
	53 52	+ 1·219	
			h m s
+ 22·368	7 55 31	+ 1·207	7 56 46
	56 31	+ 1·142	r
	57 6	— 0·777	301·420
	57 55	— 0·732	
			h m s
+ 23·326	7 59 40	— 0·906	8 1 5
	8 0 8	— 0·936	r
	2 1	+ 1·006	329·115
	2 32	+ 1·072	

1888, October 21. Telescope W.—*continued.*

Star.	Chronometer.	Micrometer.	Means.
°	h m s		h m s
+ 23·326	8 4 44	+ 1·071	8 6 1
	5 40	+ 1·020	r
	6 35	— 0·960	329·088
	7 7	— 0·954	
			h m s
+ 22·368	8 8 21	— 0·748	8 9 13
	8 47	— 0·700	r
	9 31	+ 1·330	301·580
	10 13	+ 1·278	
			h m s
+ 22·368	8 10 51	+ 1·314	8 11 48
	11 30	+ 1·336	r
	12 10	— 1·679	301·639
	12 43	— 1·692	
			h m s
+ 23·326	8 14 17	— 0·948	8 15 22
	14 53	— 0·968	r
	15 50	+ 1·005	329·070
	16 29	+ 1·052	
			h m s
+ 23·326	8 17 15	+ 1·041	8 19 35
	19 49	+ 0·999	r
	20 21	— 0·938	329·095
	20 54	— 0·911	
			h m s
+ 22·368	8 22 11	— 0·589	8 23 2
	22 44	— 1·603	r
	23 23	+ 1·406	301·803
	23 51	+ 1·392	
			h m s
+ 22·368	8 24 30	+ 1·391	8 25 31
	25 5	+ 1·451	r
	25 57	— 1·489	301·879
	26 31	— 1·594	
			h m s
+ 23·326	8 28 0	— 0·969	8 29 12
	28 38	— 0·998	r
	29 49	+ 0·980	329·031
	30 20	+ 1·049	
			h m s
+ 23·326	8 32 25	+ 1·037	8 33 40
	33 3	+ 0·969	r
	33 52	— 0·956	329·060
	35 18	— 0·930	

Digitized by Google

1888, October 21. Telescope W.—*continued.*

Star.	Chronometer.	Micrometer.	Means.
c	h m s		h m s
+ 22·368	8 55 20	— 1·300	8 56 34
	56 4	— 1·349	r
	57 10	+ 0·632	302·315
	57 42	+ 0·647	
			h m s
+ 22·368	8 58 24	+ 0·683	8 59 25
	58 55	+ 0·680	r
	59 35	— 1·260	302·382
	9 0 48	— 1·338	
			h m s
+ 23·326	9 2 14	— 1·030	9 3 38
	2 42	— 0·983	r
	4 32	+ 0·999	328·944
	5 3	+ 0·903	

At Beginning, Thermometer 34°·5. Barometer 765 mm.
„ End „ 34·5.
Chronometer Correction, + 38·5. Run + 1·0.

1888, October 24. Telescope W.

Star.	Chronometer.	Micrometer.	Means.
	h m s		h m s
Standards.	22 2 1	— 1·560	22 6 54
	2 42	4 20 9 24	r
		9 31 4 14	513·868
	4 26	— 1·530	
	5 16	4 13 9 30	
		9 10 4 10	
	7 32	1 57 9 30	h m s
		7 18 4 9	22 6 22
	9 24	+ 1·406	° ′ ″
	9 58	1 45 9 22	226 58 50
		7 7 4 18	
	11 46	+ 1·421	
			h m s
° + 22·354	8 2 43	+ 1·317	8 5 27
	3 19	58 59	r
	4 9	+ 1·337	39·754
	5 24	54 55	h m s
	6 22	21 22	8 5 39
	6 56	— 1·576	° ′ ″
	7 33	17 18	302 8 0
	8 2	— 1·570	

1888, October 24. Telescope W.—*continued.*

Star.	Chronometer.	Micrometer.	Means.
c	h m s		h m s
+ 22·354	8 8 39	— 1·529	8 11 35
	9 12	26 27	r
	9 43	— 1·524	40·001
	10 56	23 24	h m s
	11 54	10 10·5	8 11 31
	13 10	+ 1·510	° ′ ″
	14 4	15·7 17	302 18 52
	14 50	+ 1·545	
			h m s
+ 22·354	8 24 32	+ 0·746	8 27 40
	25 37	29·5 30	r
	26 36	+ 0·772	40·593
	27 11	14 14·5	h m s
	28 4	6 6	8 27 32
	28 38	— 1·181	° ′ ″
	29 15	58 58	122 42 0
	30 56	— 1·150	
			h m s
+ 22·354	8 31 46	— 1·107	8 34 20
	32 25	7 7·5	r
	32 56	— 1·102	40·877
	33 44	9 9·5	h m s
	34 28	40 40	8 34 7
	35 8	+ 0·736	° ′ ″
	35 51	42 43	122 54 45
	36 43	+ 1·028	
			h m s
+ 22·354	8 37 19	+ 1·010	8 39 39
	38 10	45 46	r
	38 39	+ 1·040	41·081
	39 30	49 49·5	h m s
	40 22	20 21	8 39 51
	40 50	— 0·940	° ′
	41 21	17 17·5	123 3 7
	41 48	— 0·948	
			h m
+ 22·354	8 42 46	— 0·853	8 44 50
	43 32	28 28·5	r
	43 56	— 0·844	41·310
	44 39	18 19	h m s
	45 15	0 1	8 44 57
	45 43	+ 1·148	° ′ ″
	46 24	3 5	303 12 48
	46 55	+ 1·170	

Digitized by Google

1888, October 24. Telescope W.—*continued.*

Star.	Chronometer.	Micrometer.	Means.
	h m s		h m s
Standards.	23 9 51	+ 1·496	23 13 34
	10 26	0 8 9 15	r
		8 30 6 0	514·024
	11 37	+ 1·494	
	12 35	0 15 9 4	
		8 35 6 4	
	14 20	2 23 9 7	h m s
		0 44 6 4	23 13 24
	15 31	— 1·464	° ′ ″
	16 16	2 1 9 11	45 57 45
		0 13 6 0	
	17 17	— 1·478	

At Beginning, Thermometer 46°5. Barometer 760 mm.
.. End „ 42°5.
Chronometer Correction, + 0ˢ·8. Run + 0ˢ·0.

1888, October 24. Telescope E.

Star.	Chronometer.	Micrometer.	Means.
°	h m s		h m s
+ 22·354	15 54 1	— 0·896	15 56 41
	54 49	39 39	r
	55 19	— 0·850	59·358
	56 33	34 35	h m s
	57 15	35 36	15 56 53
	57 48	+ 1·211	° ′ ″
	59 6	39 39	131 7 0
	59 37	+ 1·251	
			h m s
+ 22·354	16 0 11	+ 1·250	16 2 49
	1 9	45 46	r
	1 48	+ 1·252	59·593
	2 27	48 48	h m s
	3 8	41 42	16 2 54
	3 38	— 0·670	r
	4 51	40 40	131 13 45
	5 39	— 0·646	
			h m s
+ 22·354	16 7 2	— 0·609	16 9 47
	7 30	38 38	r
	8 32	— 0·539	59·924
	9 39	42 43	h m s
	10 20	50 50	16 9 55
	10 49	+ 1·488	° ′ ″
	12 17	54 55	311 16 15
	12 45	+ 1·509	

1888, October 24. Telescope E.—*continued*

Star.	Chronometer.	Micrometer.	Means.
°	h m s		h m s
+ 22·354	16 13 17	+ 1·520	16 15 42
	14 3	54 55	r
	14 32	+ 1·530	60·157
	15 21	57 58	h m s
	15 56	51 52	16 15 46
	16 41	— 1·374	° ′ ″
	17 44	50 50	311 23 22
	18 19	— 1·362	
			h m s
Standards.	6 46 2	— 1·399	6 50 32
	46 50	2 33 0 48	r
		7 42 5 27	514·127
	48 13	— 1·380	
	49 22	2 16 0 49	
		7 24 5 32	
	51 28	1 0 0 52	h m s
		6 9 5 26	6 50 20
	52 47	+ 1·500	° ′ ″
	53 43	0 50 0 54	226 56 4
		5 59 5 24	
	55 5	+ 1·532	
°			h m s
+ 22·354	16 41 16	+ 1·118	16 44 47
	42 51	10 10	r
	43 30	+ 1·162	61·350
	44 25	13 13	h m s
	45 40	14 15	16 45 2
	46 31	— 0·810	° ′ ″
	47 13	10 11	131 42 0
	47 50	— 0·770	
			h m s
+ 22·354	16 48 17	— 0·781	16 50 40
	48 58	18 19	r
	49 22	— 0·682	61·622
	50 2	8 9	h m s
	50 59	16 17	16 50 46
	51 27	+ 1·310	° ′ ″
	53 4	14 15	131 44 30
	53 33	+ 1·397	
			h m s
+ 22·354	16 54 45	+ 1·358	16 58 11
	55 50	19 20	r
	57 4	+ 1·440	61·910
	57 46	22 22	h m s
	58 29	16 17	16 58 7
	59 22	— 1·517	° ′ ″
	17 0 22	19 20	311 49 23
	1 35	— 1·460	

Digitized by Google

1888, October 24. Telescope E.—*continued.*

Star.	Chronometer.	Micrometer.	Means.
°	h m s		h m s
+ 22·354	17 2 5	— 1·449	17 5 17
	2 35	23 25	r
	3 43	— 1·418	62·212
	5 2	21 23	h m s
	6 15	28 29	17 5 27
	6 56	+ 0·626	° ′ ″
	7 56	24 26	301 54 53
	8 23	+ 0·665	

At Beginning. Thermometer 37°·5. Barometer 764 mm.
„ End „ 36·5.
Chronometer Correction + 0s. Run + 1·0.

1888, October 25. Telescope W.

Star.	Chronometer.	Micrometer.	Means.
°	h m s		h m s
+ 22·354	7 36 19	44 45	7 37 41
	37 1	40·5 41	° ′ ″
	38 25	27 27·5	317 4 48
	38 59	26·5 27	
			h m s
+ 22·347	7 40 50	55 56	7 42 20
	41 51	49 49·5	° ′ ″
	42 48	17 18	305 35 18
	43 51	18·5 19·5	
			h m s
+ 22·347	7 45 46	21 21·5	7 47 27
	46 23	18 18·5	° ′ ″
	48 27	44·5 45	125 32 18
	49 14	45 45	
			h m s
+ 22·354	7 51 29	28 28	7 53 5
	52 40	28 28	° ′ ″
	53 31	50·5 51	137 9 52
	54 39	52·5 53	
			h m s
+ 22·354	7 56 21	— 0·946	7 57 38
	57 27	— 0·878	r
	58 8	+ 1·095	99·205
	58 38	+ 1·139	
			h m s
+ 22·354	7 59 4	+ 1·158	7 59 54
	59 37	+ 1·138	r
	8 0 13	— 0·863	99·291
	0 42	— 0·850	

1888, October 25. Telescope W.—*continued.*

Star.	Chronometer.	Micrometer.	Means.
°	h m s		h m s
+ 22·347	8 3 27	— 0·609	8 4 40
	4 27	— 1·594	r
	5 7	+ 1·435	123·813
	5 38	+ 1·394	
			h m s
+ 22·347	8 6 3	+ 1·411	8 6 41
	6 26	+ 1·404	r
	6 55	— 0·627	123·765
	7 22	— 0·657	
			h m s
+ 22·347	8 8 41	— 0·640	8 9 34
	9 9	— 0·621	r
	10 1	+ 1·299	123·674
	10 26	+ 1·310	
			h m s
+ 22·347	8 11 38	+ 1·270	8 12 32
	12 12	+ 1·282	r
	12 52	— 0·705	123·554
	13 25	— 0·738	
			h m s
+ 22·354	8 14 45	— 1·520	8 16 10
	15 10	— 1·494	r
	15 42	— 1·515	100·040
	17 5	+ 1·529	
	18 8	+ 1·570	
			h m s
+ 22·354	8 18 43	+ 1·594	8 19 27
	19 3	+ 1·554	r
	19 39	— 1·401	100·173
	20 25	— 1·380	
			h m s
+ 22·354	8 22 4	58 59	8 23 48
	22 50	57·5 58·5	° ′ ″
	24 46	39 39·5	317 18 33
	25 31	38 39	
			h m s
+ 22·347	8 28 13	28 28·5	8 29 26
	28 57	29 30	° ′ ″
	29 53	57 58	305 12 33
	30 38	54 56	

Digitized by Google

1888, October 25. Telescope W.—*continued.*

Star.	Chronometer.	Micrometer.	Means.
°	h m s		h m s
+ 22·347	8 31 38	54 55·5	8 32 57
	32 14	55 56	° ′ ″
	33 17	28·5 29·5	305 11 3
	34 38	24 26	
			h m s
+ 22·354	8 37 34	40·5 42	8 39 1
	38 8	40·5 41·5	° ′ ″
	39 48	4 4·5	317 22 29
	40 33	3 4	

At Beginning, Thermometer 49°·5. Barometer 768 mm.
„ End „ 44°.
Chronometer Correction — 1ˢ·. Run + 0·5.

1888, October 25. Telescope E.

Star.	Chronometer.	Micrometer.	Means.
°	h m s		h m s
+ 22·354	15 34 31	+ 1·288	15 37 52
	35 35	18 18	r
	36 41	15·5 15·5	119·751
	37 30	+ 1·358	h m s
	38 21	— 1·604	15 37 53
	39 15	45 46	° ′ ″
	40 3	43·5 44	138 0 41
	41 8	— 1·540	
			h m s
+ 22·347	15 43 15	— 1·030	15 46 29
	44 2	38 38	r
	44 53	38·5 38·5	104·784
	45 45	— 1·130	h m s
	47 9	+ 0·871	15 46 33
	48 18	10·5 11	° ′ ″
	48 59	8 8·5	120 53 52
	49 47	+ 0·858	
			h m s
+ 22·347	15 51 17	+ 0·769	15 54 47
	52 20	10 10·5	r
	53 13	10 10·5	104·431
	53 53	+ 0·734	h m s
	55 47	— 1·328	15 54 57
	56 45	30·5 30·5	° ′ ″
	57 30	27 28	300 49 37
	58 10	— 1·313	

1888, October 25. Telescope E.—*continued.*

Star.	Chronometer.	Micrometer.	Means.
°	h m s		h m s
+ 22·354	15 59 49	— 1·111	16 2 9
	16 0 31	47 48	r
	1 9	49·5 50	120·817
	1 45	— 1·095	h m s
	2 25	+ 0·880	16 2 11
	3 4	22 22·5	° ′ ″
	4 2	20·5 21	319 5 3
	4 37	+ 0·961	
			h m s
+ 22·354	16 5 27	+ 0·990	16 8 22
	6 8	21 22	r
	6 55	23·5 24·5	121·087
	7 57	+ 1·028	h m s
	8 55	— 0·960	16 8 22
	9 50	50·5 51	° ′ ″
	10 34	48 49	319 6 11
	11 8	— 0·883	
			h m s
+ 22·347	16 13 16	— 0·624	16 16 38
	14 17	20 20	r
	15 6	19 19·5	103·548
	16 13	— 1·731	h m s
	16 59	+ 1·239	16 16 44
	18 23	52 53	° ′ ″
	19 11	50 50·5	300 35 29
	20 6	+ 1·212	

At Beginning, Thermometer 38°·5. Barometer 769·5 mm.
„ End „ 37°.
Chronometer Correction, — 1ˢ·. Run — 1·5.

1888, October 28. Telescope W.

Star.	Chronometer.	Micrometer.	Means.
°	h m s		h m s
+ 22·331	9 53 19	+ 1·369	9 54 40
	54 5	+ 1·395	
	55 11	— 1·608	327·758
	56 7	— 1·640	
			h m s
+ 20·404	9 58 0	— 1·394	9 59 36
	59 3	— 1·422	r
	10 0 23	+ 0·659	430·225
	0 59	+ 0·610	

Digitized by Google

1888, October 28. Telescope W.—*continued.*

Star.	Chronometer.	Micrometer.	Means.
°	h m s		h m s
+ 20·404	10 1 47	+ 0·627	10 2 57
	2 22	+ 1·620	r
	3 31	— 1·425	430·248
	4 7	— 1·326	
			h m s
+ 22·331	10 6 18	— 0·756	10 7 49
	7 6	— 0·720	r
	8 37	+ 1·287	327·523
	9 15	+ 1·236	
			h m s
+ 22·331	10 15 8	+ 1·164	10 17 23
	17 9	+ 1·182	r
	18 15	— 1·182	327·265
	19 1	— 0·883	
			h m s
+ 20·404	10 21 49	— 1·394	10 23 41
	22 50	— 1·431	r
	24 8	+ 1·566	430·200
	25 56	+ 0·660	
			h m s
+ 20·404	10 26 32	+ 0·690	10 27 37
	27 19	+ 0·651	r
	28 26	— 1·403	430·289
	29 31	— 1·359	
			h m s
+ 22·331	10 32 43	— 1·048	10 33 58
	33 30	— 1·032	r
	34 29	+ 0·945	326·904
	35 9	+ 0·944	
			h m s
+ 22·331	10 36 19	+ 0·955	10 37 22
	36 46	+ 0·980	r
	37 50	— 1·087	326·890
	38 32	— 1·068	
			h m s
+ 20·404	10 41 3	— 1·373	10 42 8
	41 43	— 1·400	r
	42 37	+ 0·641	430·255
	43 9	+ 1·643	
			h m s
+ 20·404	10 43 39	+ 0·686	10 45 28
	44 56	+ 0·670	r
	46 14	— 1·382	430·323
	47 1	— 1·328	
			h m s
+ 22·331	10 50 9	— 1·229	10 50 59
	50 36	— 1·193	r
	51 21	+ 0·807	326·571
	51 50	+ 0·757	

At Beginning, Thermometer 38°·5. Barometer 755·5 mm.
„ End „ 38.
Chronometer Correction. — 6ˢ.

1888. October 29. Telescope W.

Star.	Chronometer.	Micrometer.	Means.
	h m s		h m s
+ 22°·331	7 25 45	— 1·498	7 27 23
	26 44	— 1·440	r
	28 17	+ 1·559	308·042
	28 45	+ 1·463	
			h m s
+ 20·404	7 30 7	+ 1·170	7 31 32
	30 54	+ 1·099	r
	32 18	— 0·920	433·240
	32 51	— 0·869	
			h m s
+ 20·404	7 33 16	— 0·860	7 34 14
	33 43	— 0·921	r
	34 42	+ 1·083	433·227
	35 15	+ 1·152	
			h m s
+ 22·331	7 36 37	+ 1·487	7 37 33
	37 6	+ 1·509	r
	37 57	— 1·500	307·928
	38 34	— 1·580	
			h m s
+ 22·331	7 40 26	— 1·614	7 41 52
	41 25	— 1·577	r
	42 19	+ 1·444	307·806
	43 19	+ 1·360	
			h m s
+ 20·404	7 44 57	+ 1·208	7 46 19
	46 5	+ 1·168	r
	46 50	— 0·809	433·416
	47 21	— 1·734	
			h m s
+ 20·404	7 47 50	— 0·769	7 48 56
	48 28	— 0·819	r
	49 23	+ 1·185	433·411
	50 3	+ 1·226	
			h m s
+ 22·331	7 51 24	+ 1·332	7 52 40
	52 18	+ 1·400	r
	53 2	— 0·631	307·719
	53 55	— 1·663	
			h m s
+ 22·331	7 55 9	— 0·653	7 56 8
	55 43	— 0·656	r
	56 30	+ 1·356	307·685
	57 9	+ 1·326	
			h m s
+ 20·404	7 58 25	+ 1·258	7 59 33
	59 11	+ 1·251	r
	8 0 2	— 0·774	433·509
	0 33	— 0·716	

Digitized by Google

1888, October 29. Telescope W.—*continued.*

Star.	Chronometer.	Micrometer.	Means.
°	h m s		h m s
+ 20·404	8 1 12	— 0·689	8 2 9
	1 39	— 0·733	r
	2 29	+ 1·220	433·520
	3 15	+ 1·242	
			h m s
+ 22·331	8 4 26	+ 1·268	8 5 21
	4 57	+ 1·302	r
	5 44	— 0·992*	307·543
	6 17	— 0·741	

At Beginning, Thermometer 42.° Barometer 757 mm.
„ End „ 40·5.
Chronometer Correction, — 6s. Run + 0·2.
* Micrometer diminished by 1 wire interval = 0·250.

1888, October 30. Telescope W.

Star.	Chronometer.	Micrometer.	Means.
°	h m s		h m s
+ 20·404	7 28 16	— 1·557	7 29 29
	28 54	— 1·594	r
	29 59	+ 1·412	445·839
	30 47	+ 1·417	
			h m s
+ 22·331	7 32 32	+ 0·812	7 33 41
	33 8	+ 0·835	r
	34 13	— 1·123	298·670
	34 53	— 1·184	
			h m s
+ 22·331	7 35 32	— 1·125	7 36 50
	36 12	— 1·170	r
	37 18	+ 0·840	298·672
	38 18	+ 0·800	
			h m s
+ 20·404	7 39 43	+ 1·516	7 40 46
	40 17	+ 1·523	r
	41 15	— 1·465	445·081
	41 49	— 1·412	
			h m s
		— 1·461	7 45 59
+ 20·404	7 43 36	— 1·427	
	45 28	— 1·445	r
	47 0	+ 1·572	446·141
	47 51	+ 1·598	

1888, October 30. Telescope W.—*continued.*

Star.	Chronometer.	Micrometer.	Means.
°	h m s		h m s
+ 22·331	7 50 5	+ 0·832	7 50 55
	50 36	+ 0·855	r
	51 15	— 1·170	298·673
	51 46	— 1·171	
			h m s
+ 22·331	7 52 26	— 1·203	7 53 50
	53 12	— 1·180	r
	54 27	+ 0·850	298·638
	55 26	+ 0·809	
			h m s
+ 20·404	7 56 59	+ 0·618	7 58 8
	57 31	+ 1·657	
	58 34	— 1·340	446·323
	59 29	— 1·289	
			h m s
+ 20·404	8 0 30	— 1·310	8 1 26
	0 58	— 1·326	r
	1 48	+ 1·671	446·362
	2 29	+ 0·690	
			h m s
+ 22·331	8 4 42	+ 0·782	8 5 37
	5 11	+ 0·812	r
	6 3	— 1·180	298·609
	6 33	— 1·200	
			h m s
+ 22·331	8 6 59	— 1·193	8 8 1
	7 34	— 1·190	r
	8 28	+ 0·811	298·604
	9 3	+ 0·780	
			h m s
+ 20·404	8 10 19	+ 0·770	8 11 41
	11 1	+ 0·742	r
	12 14	— 1·251	446·530
	13 10	— 1·201	

At Beginning, Thermometer 36·5.° Barometer 767·5 mm.
„ End „ 35.
Chronometer Correction, — 7s. Run + 1·5.

1888, October 31. Telescope W.

Star.	Chronometer.	Micrometer.	Means.
	h m s		h m s
+ 22·329	7 13 31	+ 0·710	7 14 46
	14 26	+ 0·708	r
	15 12	— 0·855	343·815
	15 55	— 0·933	

Digitized by Google

1888, October 31. Telescope W.—*continued.*

Star.	Chronometer.	Micrometer.	Means.
°	h m s		h m s
+ 20·404	7 17 56	+ 1·420	7 19 21
	18 44	+ 1·390	r
	19 54	+ 1·248	466·829·
	20 49	+ 1·221	
			h m s
+ 20·404	7 21 49	+ 1·229	7 22 58
	22 24	+ 1·319	r
	23 23	− 1·309	466·964·
	24 18	− 1·310	
			h m s
+ 22·329	7 25 24	− 1·000	7 26 41
	26 5	− 0·937	r
	27 0	+ 0·645	343·669
	28 17	+ 1·630	
			h m s
+ 22·329	7 28 55	+ 0·640	7 30 1
	29 39	+ 0·654	r
	30 29	− 1·008	343·624·
	31 2	− 1·037	
			h m s
+ 20·404	7 32 23	− 1·271	7 33 16
	32 55	− 1·192	r
	33 33	+ 1·412	467·165·
	34 14	+ 1·382	
			h m s
+ 20·404	7 35 50	+ 1·440	7 37 1
	36 33	+ 1·460	r
	37 33	− 1·119	467·287·
	38 8	− 1·206	
			h m s
+ 22·329	7 39 46	− 1·079	7 40 43
	140 14	− 1·054	r
	41 6	+ 1·542	343·483
	41 46	+ 1·558	
			h m s
+ 22·329	7 42 13	+ 1·561	7 43 11
	42 46	+ 1·560	r
	43 38	− 1·190	343·401
	44 6	− 1·128	
			h m s
+ 20·404	7 46 14	− 1·140	7 47 23
	147 6	− 1·002	r
	47 50	+ 1·597	467·502
	48 22	+ 1·550	

1888, October 31. Telescope W.—*continued.*

Star.	Chronometer.	Micrometer.	Means.
°	h m s		h m s
+ 20·404	7 49 50	+ 1·560	7 50 56
	50 28	+ 0·650	r
	51 25	− 1·019	467·580
	52 3	− 1·031	
			h m s
+ 22·329	7 52 57	− 1·134	7 53 52
	53 38	− 1·146	r
	54 10	+ 1·473	343·328
	54 43	+ 1·463	

At Beginning, Thermometer 48°. Barometer 767·5 mm.
„ End „ 47·5.
Chronometer Correction, — 8ˢ.

1888, November 1. Telescope W.

Star.	Chronometer.	Micrometer.	Means.
°			h m s
+ 22·329	7 21 23	+ 1·011	7 22 39
	22 26	+ 1·010	r
	23 11	− 1·650	330·365
	23 48	− 1·641	
			h m s
+ 20·388	7 28 11	− 1·118	7 29 57
	29 37	− 1·147	r
	30 42	+ 1·511	271·423
	31 20	+ 1·600	
			h m s
+ 20·388	7 32 12	+ 1·530	7 36 0
	33 1	+ 1·568	r
	33 31	+ 1·576	271·402
		− 1·109	
	38 46	− 1·230	
	39 26	− 1·128	
			h m s
+ 22·329	7 40 56	− 0·685	7 43 5
	42 22	− 0·669	r
	44 19	+ 0·960	330·293
	44 45	+ 0·980	
			h m s
+ 22·329	7 47 25	+ 1·001	7 48 24
	47 57	+ 0·970	r
	48 36	− 0·673	330·289
	49 38	− 0·700	

Digitized by Google

1888, November 1. Telescope W.—*continued.*

Star.	Chronometer.	Micrometer.	Means.
°	h m s		h m s
+ 20·388	7 51 47	— 1·178	7 52 58
	52 26	— 1·320	r
	53 29	+ 1·388	271·174
	54 9	+ 1·458	
			h m s
+ 20·388	7 54 35	+ 1·429	7 56 21
	55 19	+ 1·346	r
	57 32	— 1·308	271·116
	57 59	— 1·234	
			h m s
+ 22·329	7 59 37	— 0·788	8 0 41
	8 0 6	— 0·780	r
	1 2	+ 0·912	330·102
	2 1	+ 0·861	
			h m s
+ 22·329	8 3 52	+ 0·900	8 4 51
	4 17	+ 0·880	r
	5 25	— 0·758	330·129
	5 49	— 0·763	
			h m s
+ 20·388	8 7 56	— 1·327	8 9 52
	8 25	— 1·332	r
	11 18	+ 1·305	270·951
	11 49	+ 1·256	
			h m s
+ 20·388	8 12 29	+ 1·309	8 13 28
	12 58	+ 1·287	r
	13 52	— 1·310	270·923
	14 35	— 1·440	
			h m s
+ 22·329	8 16 8	— 0·777	8 17 45
	16 36	— 0·791	r
	17 21	+ 0·858	330·039
	18 13	+ 0·788	

At Beginning, Thermometer 52°·5. Barometer 768·5 mm.
„ End „ 51°·5.
Chronometer Correction, — 9ˢ. Run + 1·7.

1888, November 2. Telescope W.—*continued.*

Star.	Chronometer.	Micrometer.	Means.
°	h m s		h m s
+ 20·388	7 4 45	— 1·357	7 6 29
	5 35	— 1·256	r
	7 20	+ 1·457	259·081
	8 5	+ 1·318	
	8 27		
			h m s
+ 20·388	7 10 1	+ 1·352	7 14 4
	10 42	+ 1·337	r
	13 54	— 1·350	259·049
	21 38	— 1·240	
			h m s
+ 22·329	7 24 38	— 1·531	7 26 23
	25 13	— 1·547	r
	26 50	+ 1·170	330·651
	28 53	+ 1·210	
			h m s
+ 22·329	7 30 24	+ 1·198	7 32 37
	32 2	+ 1·190	r
	33 4	— 1·490	330·722
	34 59	— 1·454	
			h m
+ 20·388	7 39 6	— 1·264	7 41 8
	40 34	— 1·322	r
	41 50	+ 1·376	259·110
	43 4	+ 1·431	
			h m s
+ 20·388	7 43 39	+ 1·440	7 48 4
	45 29	+ 1·349	r
	51 19	— 1·170	259·190
	51 49	— 1·237	
			h m s
+ 22·329	7 53 19	— 1·397	7 54 14
	53 55	— 1·451	r
	54 38	+ 1·190	330·789
	55 6	+ 1·237	

At Beginning, Thermometer 57°·5. Barometer 770 mm.
„ End „ 57°·5.
Chronometer Correction, — 10ˢ. Run + 4·5.

1888, November 2. Telescope W.

Star.	Chronometer.	Micrometer.	Means.
°			h m s
+ 22·329	6 52 59	+ 1·046	6 54 15
	53 45	+ 1·063	r
	54 49	— 1·508	330·529
	55 27	— 1·542	

1888, November 3. Telescope W.

Star.	Chronometer.	Micrometer.	Means.
			h m s
+ 21·317	6 57 9	+ 0·710	6 58 11
	57 36	+ 0·767	r
	58 43	— 1·012	269·797
	59 18	— 0·871	

Digitized by Google

1888, November 3. Telescope W.—*continued.*

Star.	Chronometer.	Micrometer.	Means.
°	h m s		h m s
+ 20·388	7 0 42	− 1·491	7 1 56
	1 38	− 1·647	r
	2 26	+ 1·032	262·497
	2 57	+ 1·100	
			h m s
+ 20·388	7 3 18	+ 1·147	7 4 3
	3 39	+ 1·108	r
	4 33	− 1·597	262·569
	5 6	− 1·520	
			h m s
+ 21·317	7 6 25	− 0·941	7 7 20
	6 51	− 1·047	r
	7 47	+ 0·706	269·699
	8 16	+ 0·690	
			h m s
+ 21·317	7 9 15	+ 0·661	7 10 13
	9 44	+ 0·597	r
	10 44	− 0·981	269·649
	11 11	− 0·978	
			h m s
+ 20·388	7 12 9	− 1·472	7 12 59
	12 35	− 1·526	r
	13 22	+ 1·163	262·662
	13 49	+ 1·159	
			h m s
+ 20·388	7 14 26	− 1·188	7 15 17
	14 50	− 1·154	r
	15 38	− 1·489	262·697
	16 13	− 1·458	
			h m s
+ 21·317	7 17 9	− 1·006	7 18 37
	17 36	− 1·078	r
	18 31	+ 1·610	269·571
		+ 1·640	
	19 37	− 1·034	
	20 12	− 1·098	
			h m s
+ 21·317	7 23 23	− 1·130	7 24 17
	23 48	− 1·027	r
	24 37	+ 1·564	269·518
	25 22	+ 1·630	
			h m s
+ 20·388	7 26 20	+ 1·209	7 27 17
	26 51	+ 1·269	r
	27 48	− 1·380	262·814
	28 9	− 1·470	

1888, November 3. Telescope W.—*continued.*

Star.	Chronometer.	Micrometer.	Means.
c	h m s		h m s
+ 20·388	7 28 29	− 1·451	7 29 32
	29 8	− 1·337	r
	30 1	+ 1·289	262·863
	30 29	+ 1·226	
			h m s
+ 21·317	7 31 27	+ 1·586	7 32 17
	31 53	+ 1·592	r
	32 39	− 1·091	269·495
	33 11	− 1·096	
			h m s
+ 21·317	7 34 50	− 1·150	7 35 46
	35 12	− 1·064	r
	36 3	+ 1·550	269·428
	36 58	+ 1·520	
			h m s
+ 20·388	7 38 18	+ 1·280	7 39 6
	38 41	+ 1·320	r
	39 30	− 1·330	262·968
	39 56	− 1·334	
			h m s
+ 20·388	7 40 20	− 1·346	7 41 8
	40 41	− 1·327	r
	41 34	+ 1·345	262·985
	41 59	+ 1·298	
			h m s
+ 21·317	7 43 31	+ 1·558	7 44 27
	43 59	+ 1·538	r
	44 54	− 1·169	269·388
	45 26	− 1·150	

At Beginning, Thermometer 46°·5. Barometer 759·5 mm.
Chronometer Correction, − 11ˢ. Run + 2·2.

1888, November 7. Telescope W.

Star.	Chronometer.	Micrometer.	Means.
°	h m s		h m s
+ 21·304	6 41 19	+ 1·216	6 42 31
	42 2	+ 1·180	r
	43 2	− 1·458	384·748
	43 40	− 1·441	
			h m s
+ 19·340	6 45 29	− 1·098	6 46 44
	46 3	− 1·176	r
	47 28	+ 1·436	437·342
	47 57	+ 1·523	

Digitized by Google

1888, November 7. Telescope W.—*continued.*

Star.	Chronometer.	Micrometer.	Means.
°	h m s		h m s
+ 19·340	6 48 24	+ 1·501	6 49 25
	48 54	+ 1·417	r
	49 48	— 1·270	437·237
	50 34	— 1·167	
			h m s
+ 21·304	6 52 17	— 1·380	6 53 23
	52 58	— 1·421	r
	53 45	+ 1·212	384·852
	54 34	+ 1·293	
			h m s
+ 21·304	6 56 13	+ 1·293	6 57 14
	56 56	+ 1·232	r
	57 40	— 1·361	384·910
	58 9	— 1·344	
			h m s
+ 19·340	6 59 35	— 1·280	7 0 41
	7 0 9	— 1·360	r
	1 9	+ 1·238	436·940
	1 51	+ 1·282	
			h m s
+ 19·340	7 2 29	+ 1·290	7 3 10
	2 46	+ 1·266	r
	3 25	— 1·418	436·906
	4 1	— 1·325	
			h m s
+ 21·304	7 5 30	— 1·304	7 6 21
	6 1	— 1·363	r
	6 42	+ 1·284	385·000
•	7 10	+ 1·383	
			h m s
+ 21·304	7 7 33	+ 1·338	7 8 25
	8 1	+ 1·300	r
	8 52	— 1·340	385·024
	9 14	— 1·250	
			h m s
+ 19·340	7 10 30	— 1·421	7 11 26
	11 3	— 1·490	r
	11 50	+ 1·117	436·657
	12 22	+ 1·109	
			h m s
+ 19·340	7 12 53	+ 1·165	7 14 8
	13 35	+ 1·115	r
	14 44	— 1·544	436·611
	15 19	— 1·513	
			h m s
+ 21·304	7 16 55	— 1·280	7 17 49
	17 22	— 1·281	r
	18 12	+ 1·382	385·119
	18 46	+ 1·418	

1888, November 7. Telescope W.—*continued.*

Star.	Chronometer.	Micrometer.	Means.
°	h m s		h m s
+ 21·304	7 21 3	+ 1·440	7 21 55
	21 34	+ 1·373	r
	22 17	— 1·260	385·156
	22 48	— 1·240	
			h m s
+ 19·340	7 23 36	— 0·631	7 24 27
	24 7	— 1·679	r
	24 47	+ 0·960	436·334
	25 18	+ 1·018	
			h m s
+ 19·340	7 25 43	+ 1·024	7 26 32
	26 4	+ 0·940	r
	27 1	— 0·660	436·315
	27 21	— 1·673	
			h m s
+ 21·304	7 29 8	— 1·188	7 30 7
	29 43	— 1·238	r
	30 33	+ 1·402	385·236
	31 6	+ 1·491	

At Beginning, Thermometer 48.° Barometer 768 mm.
„ End „ 46·5.
Chronometer Correction, — 18s. Run + 5·0.

1888, November 10. Telescope E.

Star.	Chronometer.	Micrometer.	Means.
°	h m s		h m s
+ 20·341	13 33 39	— 1·254	13 34 46
	34 13	— 1·258	r
	35 20	+ 1·439	297·164
	35 51	+ 1·401	
			h m s
+ 19·340	13 38 19	+ 1·578	13 39 21
	38·55	+ 1·604	r
	39·40	— 1·036	345·522
	40·28	— 1·081	
			h m s
+ 19·340	13 41 1	— 1·124	13 41 58
	41 29	— 1·085	r
	42 23	+ 1·618	345·476
	42 58	+ 1·544	
			h m s
+ 20·341	13 48 32	+ 1·293	13 49 22
	49 2	+ 1·268	r
	49 44	— 1·329	296·937
	50 11	— 1·358	

Digitized by Google

1888, November 10. Telescope E.—*continued.*

Star.	Chronometer.	Micrometer.	Means.
°	h m s		h m s
+ 20·341	13 51 14	— 1·361	13 52 26
	52 0	— 1·359	r
	52 49	+ 1·212	296·845
	53 41	+ 1·198	
			h m s
+ 19·340	13 55 42	+ 1·488	13 56 40
	56 18	+ 1·576	r
	56 56	— 1·124	345·309
	57 41	— 1·141	
			h m s
+ 19·340	13 58 42	— 1·146	13 59 52
	59 26	— 1·154	r
	14 0 21	+ 1·490	345·339
	1 0	+ 1·470	
			h m s
+ 20·341	14 3 2	+ 1·159	14 4 16
	3 37	+ 1·210	r
	4 57	— 1·488	296·697
	5 28	— 1·487	

At Beginning, Thermometer 48°·5. Barometer 749 mm.
.. End .. 46.
Chronometer Correction, — 24ˢ.

1888, November 11. Telescope W.

Star.	Chronometer.	Micrometer.	Means.
°	h m s		h m s
+ 20·341	6 16 39	— 1·110	6 17 40
	17 15	— 1·120	r
	18 5	+ 1·563	285·450
	18 40	+ 1·568	
			h m s
+ 19·340	6 19 56	+ 1·483	6 21 2
	20 34	+ 1·548	r
	21 31	— 1·097	337·403
	22 8	— 1·127	
			h m s
+ 19·340	6 26 48	— 1·137	6 27 48
	27 23	— 1·062	r
	28 15	+ 1·586	337·462
	28 47	+ 1·538	
			h m s
+ 20·341	6 30 6	+ 1·464	6 31 17
	30 59	+ 1·515	r
	31 48	— 1·170	285·306
	32·14	— 1·197	

1888, November 11. Telescope W.—*continued.*

Star.	Chronometer.	Micrometer.	Means.
°	h m s		h m s
+ 20·341	6 33 28	— 1·200	6 34 13
	33 56	— 1·178	r
	34 30	+ 1·490	285·283
	34 57	+ 1·455	
			h m s
+ 19·340	6 36 47	+ 1·540	6 37 52
	37 33	+ 1·608	r
	38 36	— 1·054	337·479
	38 52	— 1·134	
			h m s
+ 19·340	6 39 14	— 1·132	6 39 57
	39 37	— 1·128	r
	40 15	+ 1·585	337·432
	40 41	+ 1·550	
			h m s
+ 20·341	6 42 11	+ 1·440	6 43 55
	43 49	+ 1·443	r
		+ 1·438	285·211
	44 33	— 1·218	
	45 7	— 1·240	
			h m s
+ 20·341	6 46 25	— 1·191	6 47 29
	46 57	— 1·253	r
	47·52	+ 1·401	285·217
	48·21	+ 1·478	
			h m s
+ 19·340	6 49 40	+ 1·558	6 50 36
	50 16	+ 1·519	r
	51 1	— 1·150	337·407
	51 28	— 1·112	
			h m s
+ 19·340	6 52 7	— 1·088	6 53 3
	52 30	— 1·138	r
	53 28	+ 1·503	337·426
	54 7	+ 1·576	
			h m s
+ 20·341	6 55 17	+ 1·440	6 56 8
	55 47	+ 1·360	r
	56 31	— 1·230	285·136
	56 58	— 1·237	
			h m s
+ 20·341	6 57 53	— 1·246	6 58 38
	58 14	— 1·264	r
	58·53	+ 1·368	285·107
	59·31	+ 1·356	

Digitized by Google

1888, November 11. Telescope W.—*continued.*

Star.	Chronometer.	Micrometer.	Means.
°	h m s		h m s
+ 19·340	7 0 50	+ 1·588	7 1 30
	1 12	+ 1·529	r
	1 46	— 1·140	337·444
	2 11	— 1·088	
			h m s
+ 19·340	7 2 32	— 1·096	7 3 24
	3 0	— 1·081	r
	3 51	+ 1·469	337·430
	4 14	+ 1·568	
			h m s
+ 20·341	7 5 29	+ 1·368	7 6 19
	5 53	+ 1·380	r
	6 44	— 1·319	285·079
	7 10	— 1·270	

At Beginning, Thermometer 39°·5. Barometer 759·5 mm.
„ End „ 37·5.
Chronometer Correction, — 25ˢ. Run + 2·7.

1888, November 11. Telescope E.—*continued.*

Star.	Chronometer.	Micrometer.	Means.
°	h m s		h m s
+ 19·340	13 28 17	— 1·462	13 29 5
	28 45	— 1·450	r
	29 22	+ 1·227	336·762
	29 55	+ 1·210	
			h m s
+ 19·340	13 30 17	+ 1·209	13 31 8
	30 47	+ 1·198	r
	31 31	— 1·423	336·762
	31 56	— 1·460	
			h m s
+ 20·341	13 33 49	— 1·110	13 34 41
	34 21	— 1·088	r
	35 6	+ 1·513	281·438
	35 29	+ 1·562	

At Beginning, Thermometer 35°·5. Barometer 761 mm.
„ End „ 35·5.
Chronometer Correction, — 26ˢ.

1888, November 11. Telescope E.

Star.	Chronometer.	Micrometer.	Means.
°	h m s		h m s
+ 20·341	13 11 35	+ 1·640	13 12 40
	12 10	+ 1·624	r
	13 15	— 0·990	281·632
	13 41	— 1·010	
			h m s
+ 19·340	13 15 23	— 1·431	13 16 36
	16 4	— 1·397	r
	16 58	+ 1·240	336·785
	17 59	+ 1·158	
			h m s
+ 19·340	13 18 43	+ 1·214	13 19 29
	19 10	+ 1·227	r
	19 45	— 1·422	336·783
	20 18	— 1·453	
			h m s
+ 20·341	13 22 5	— 1·048	13 23 2
	22 33	— 1·014	r
	23 28	+ 1·582	281·553
	24 1	+ 1·587	
			h m s
+ 20·341	13 25 12	+ 1·612	13 26 3
	25 47	— 1·629	r
	26 24	— 1·053	281·546
	26 49	— 1·096	

1888, November 12. Telescope W.

Star.	Chronometer.	Micrometer.	Means.
°	h m s		h m s
+ 20·341	7 20 59	+ 1·480	7 21 44
	21 24	+ 1·447	r
	22 3	— 1·129	279·312
	22 31	— 1·173	
			h m s
+ 19·340	7 23 11	— 0·892	7 31 19
	29 57	— 0·882	r
	30 41	— 0·868	335·940
	34 29	+ 0·848	
	34 55	+ 0·795	
			h m s
+ 19·340	7 35 18	+ 0·789	7 36 26
	35 34	+ 0·827	r
	37 4	— 0·834	335·969
	37 34	— 0·844	
			h m s
+ 20·341	7 53 1	— 1·170	7 54 23
	53 27	— 1·192	r
	55 19	+ 1·482	279·295
	55 47	+ 1·470	
			h m s
+ 20·341	7 56 33	+ 1·468	7 59 13
	58 34	+ 1·493	r
	59 43	— 1·190	279·279
	8 2 3	— 1·212	

Digitized by Google

1888, November 12. Telescope W.—*continued.*

Star.	Chronometer.	Micrometer.	Means.
°	h m s		h m s
+ 19·340	8 5 4	− 0·780	8 8 13
	5 34	− 0·762	r
	9 13	+ 0·917	336·142·
	13 0	+ 0·910	
			h m s
+ 19·340	8 20 29	+ 0·908	8 23 27
	23 50	+ 0·979	r
	24 32	− 0·687	336·227·
	24 58	− 0·745	
			h m s
+ 20·341	8 38 42	− 1·220	8 41 47
	39 31	− 1·190	r
	44 1	+ 1·508	279·317·
	44 53	+ 1·537	
			h m s
+ 20·341	8 45 33	+ 1·169	8 47 2
	47 1	+ 1·125	r
	47 36	− 1·460	279·319
	47 59	− 1·472	
			h m s
+ 19·340	8 48 47	− 0·990	8 49 48
	49 25	− 1·010	r
	50 20	+ 0·630	336·350
	50 41	+ 0·670	
			h m s
+ 19·340	8 53 51	+ 0·653	8 54 37
	54 16	+ 0·656	r
	55 1	− 1·010	336·345·
	55 22	− 0·960	
			h m s
+ 20·341	8 56 58	− 1·510	8 57 59
	57 31	− 1·490	r
	58 23	+ 1·198	279·290
	59 6	+ 1·222	

At Beginning, Thermometer 35°·5. Barometer 761 mm.
„ End „ 38°·5.
Chronometer Correction, — 27ˢ. Run — 2·5.

1888, November 12. Telescope E.—*continued.*

Star.	Chronometer.	Micrometer.	Means.
°	h m s		h m s
+ 19·340	13 29 10	− 0·890	13 30 4
	29 40	− 0·871	r
	30 23	+ 0·726	337·847·
	31 3	+ 0·730	
			h m s
+ 19·340	13 31 21	+ 0·736	13 32 20
	31 51	+ 0·768	r
	32 35	− 0·834	337·888
	33 35	− 0·894	
			h m s
+ 20·341	13 35 18	− 1·028	13 36 10
	35 47	− 0·965	r
	36 33	+ 1·617	279·612
	37 4	+ 1·600	
			h m s
+ 20·341	13 38 1	+ 1·650	13 38 58
	38 38	+ 1·607	r
	39 22	− 1·031	279·617·
	39 53	− 0·991	
			h m s
+ 19·340	13 41 13	− 0·880	13 42 5
	41 41	− 0·866	r
	42 27	+ 0·845	337·949·
	42 59	+ 0·800	
			h m s
+ 19·340	13 43 24	+ 0·797	13 44 29
	43 49	+ 0·819	r
	45 5	− 0·844	337·958·
	45 40	− 0·855	
			h m s
+ 20·341	13 46 54	− 0·993	13 47 51
	47 18	− 0·980	r
	48 11	+ 1·647	279·664·
	49 3	+ 1·655	

At Beginning, Thermometer 34°·5. Barometer 770·5 mm.
„ End „
Chronometer Correction, — 27ˢ.

1883, November 12. Telescope E.

Star.	Chronometer.	Micrometer.	Means.
°	h m s		h m s
+ 20·341	13 25 29	+ 1·578	13 26 31
	26 3	+ 1·552	r
	27 3	− 0·980	279·564·
	27 31	− 1·021	

1888, November 13. Telescope W.

Star.	Chronometer.	Micrometer.	Means.
°	h m s		h m s
+ 20·341	6 12 3	+ 1·141	6 13 35
	12 53	+ 1·142	r
	14 12	− 1·497	286·668
	15 11	− 1·450	

Digitized by Google

1888, November 13. Telescope W.—*continued.*

Star.	Chronometer.	Micrometer.	Means.
°	h m s		h m s
+ 19·340	6 16 35	— 1·287	6 17 45
	17 3	— 1·275	r
	18 23	+ 1·341	343·082
	18 59	+ 1·385	
			h m s
+ 19·340	6 19 43	+ 1·411	6 20 52
	20 21	+ 1·405	r
	21 15	— 1·265	343·141
	22 9	— 1·268	
			h m s
+ 20·341	6 23 50	— 1·422	6 24 39
	24 11	— 1·470	r
	24 56	+ 1·192	286·767
	25 21	+ 1·234	
			h m s
+ 20·341	6 27 22	+ 1·211	6 28 17
	27 56	+ 1·249	r
	28 37	— 1·440	286·799
	29 14	— 1·421	
			h m s
+ 19·340	6 30 46	— 1·194	6 31 32
	31 14	— 1·211	r
	31 52	+ 1·447	343·270
	32 18	+ 1·499	
			h m s
+ 19·340	6 32 48	+ 1·486	6 33 34
	33 15	+ 1·422	r
	33 57	— 1·155	343·303
	34 17	— 1·147	
			h m s
+ 20·341	6 35 54	— 1·398	6 36 50
	36 19	— 1·420	r
	37 11	+ 1·304	286·886
	37 56	+ 1·286	
			h m s
+ 20·341	6 38 34	+ 1·292	6 38 34
	38 50	+ 1·230	r
	40 19	— 1·382	286·901
	40 43	— 1·338	
			h m s
+ 19·340	6 41 57	— 1·121	6 42 49
	42 16	— 1·130	r
	43 5	+ 1·527	343·421
	43 55	+ 1·567	

1888, November 13. Telescope W.—*continued.*

Star.	Chronometer.	Micrometer.	Means.
°	h m s		h m s
+ 19·340	6 44 15	+ 1·570	6 45 1
	44 37	+ 1·500	r
	45 24	— 1·128	343·436
	45 47	— 1·070	
			h m s
+ 20·341	6 46 50	— 1·298	6 47 44
	47 18	— 1·300	r
	48 5	+ 1·351	287·073
	48 45	+ 1·393	

At Beginning, Thermometer 38°·0. Barometer 773 mm.
„ End „ 36·5.
Chronometer Correction, — 28ˢ. Run + 0·7.

1888, November 14. Telescope W.

Star.	Chronometer.	Micrometer.	Means.
°	h m s		h m s
+ 20·341	6 4 34	— 0·887	6 5 47
	5 11	— 0·823	r
	6 23	+ 0·862	305·968
	7 1	+ 0·784	
			h m s
+ 18·283	6 8 37	+ 1·474	6 9 42
	9 17	+ 1·543	r
	10 14	— 1·163	223·326
	10 42	— 1·202	
			h m s
+ 18·283	6 11 5	— 1·185	6 12 10
	11 54	— 1·153	r
	12 33	+ 1·450	223·275
	13 7	+ 1·439	
			h m s
+ 20·341	6 14 32	+ 0·880	6 15 40
	15 13	+ 0·880	r
	16 3	— 0·720	306·110
	16 51	— 0·820	
			h m s
+ 20·341	6 18 4	— 0·751	6 19 16
	18 45	— 0·690	r
	19 38	+ 0·932	306·221
	20 37	+ 0·952	

Digitized by Google

1888, November 14. Telescope W.—*continued.*

Star.	Chronometer.	Micrometer.	Means.
°	h m s		h m s
+ 18·283	6 22 3	+ 1·334	6 22 48
	22 21	+ 1·360	r
	23 9	— 1·300	223·042
	23 39	— 1·310	
			h m s
+ 18·283	6 24 11	— 1·340	6 25 6
	24 44	— 1·348	r
	25 32	+ 1·300	222·945
	25 58	+ 1·279	
			h m s
+ 20·341	6 27 50	+ 0·996	6 28 52
	28 22	+ 1·014	r
	29 19	— 1·560	306·406
	29 57	— 1·637	
			h m s
+ 20·341	6 31 0	— 1·625	6 31 57
	31 33	— 1·608	r
	32 21	+ 1·094	306·430
	32 55	+ 1·000	
			h m s
+ 18·283	6 33 53	+ 1·210	6 34 46
	34 18	+ 1·224	r
	35 1	— 1·446	222·779
	35 53	— 1·430	
			h m s
+ 18·283	6 37 59	+ 1·154	6 38 43
	38 21	+ 1·160	r
	39 1	— 1·457	222·689
	39 30	— 1·479	
			h m s
+ 20·341	6 41 5	— 1·547	6 42 2
	41 35	— 1·507	r
	42 32	+ 1·148	306·596
	42 57	+ 1·098	
			h m s
+ 20·341	6 44 15	+ 1·144	6 44 58
	44 35	+ 1·198	
	45 16	— 1·474	306·676
	45 45	— 1·518	
			h m s
+ 18·283	6 47 12	— 1·557	6 48 6
	47 37	— 1·582	r
	48 37	+ 1·121	222·542
	48 57	+ 1·102	

1888, November 14. Telescope W.—*continued.*

Star.	Chronometer.	Micrometer.	Means.
°	h m s		h m s
+ 18·283	6 49 39	+ 1·046	6 50 24
	50 2	+ 1·102	r
	50 48	— 1·592	222·483
	51 9	— 1·590	
			h m s
+ 20·341	6 53 11	— 1·448	6 54 13
	53 50	— 1·408	r
	54 41	+ 1·296	306·845
	55 9	+ 1·250	

At Beginning, Thermometer 50°5. Barometer 769·5 mm.
„ End „ 47·5.
Chronometer Correction, — 29ˢ. Run + 2·0.

1888, November 17. Telescope W.

Star.	Chronometer.	Micrometer.	Means.
°	h m s		h m s
+ 19·329	5 52 9	— 0·621	5 52 15
	52 42	— 0·619	r
	53 53	+ 0·961	168·385
	54 17	+ 1·050	
			h m s
+ 18·283	5 55 30	+ 1·643	5 56 23
	56 5	+ 1·642	r
	56 52	— 1·050	179·598
	57 17	— 1·038	
			h m s
+ 18·283	5 58 5	— 1·070	5 59 3
	58 42	— 1·018	r
	59 15	+ 1·629	179·609
	6 0 10	+ 1·677	
			h m s
+ 19·329	6 1 39	+ 1·048	6 2 47
	2 30	+ 1·041	r
	3 17	— 1·598	168·452
	3 42	— 1·587	
			h m s
+ 19·329	6 4 7	— 1·607	6 5 14
	4 37	— 1·587	r
	5 50	+ 1·030	168·453
	6 24	+ 1·070	

Digitized by Google

1888, November 17. Telescope W.—*continued.*

Star.	Chronometer.	Micrometer.	Means.
°	h m s		h m s
+ 18·283	6 7 48	+ 0·694	6 8 28
	8 12	+ 0·660	r
	8 45	— 0·969	179·700·
	9 9	— 0·984	
			h m s
+ 18·283	6 9 57	— 0·988	6 10 39
	10 20	— 0·950	r
	10 54	+ 1·699	179·717
	11 24	+ 1·674	
			h m s
+ 19·329	6 12 50	+ 1·126	6 14 1
	13 42	+ 1·038	r
	14 18	— 0·638	168·472·
	15 16	— 0·581	
			h m s
+ 19·329	6 15 39	— 0·570	6 16 44
	16 17	— 0·607	r
	17 2	+ 1·028	168·475
	18 1	+ 1·099	
			h m s
+ 18·283	6 18 57	+ 0·750	6 19 57
	19 43	+ 0·708	r
	20 23	— 0 934	179·780·
	20 46	— 0·957	
			h m s
+ 18·283	6 21 8	— 0·948	6 22 1
	21 41	— 0·958	r
	22 25	+ 0·720	179·777
	22 51	+ 0·740	
			h m s
+ 19·329	6 24 7	+ 1·120	6 25 25
	24 45	+ 1·111	r
	25 49	— 0·592	168·539·
	27 1	— 0·560	
			h m s
+ 19·329	6 28 37	— 1·530	6 29 32
	29 10	— 1·627	r
	29 56	+ 1·054	168·517·
	30 25	+ 1·138	
			h m s
+ 18·283	6 31 49	+ 0·778	6 33 5
	32 17	+ 0·764	r
	33 51	— 0·913	179·894
	34 22	— 0·861	

1888, November 17. Telescope W.—*continued.*

Star.	Chronometer.	Micrometer.	Means.
°	h m s		h m s
+ 18·283	6 34 47	— 0·879	6 35 26
	35 11	— 0·890	r
	35 44	+ 0·760	179·877·
	36 2	+ 0·764	
			h m s
+ 19·329	6 37 48	+ 1·131	6 38 41
	38 14	+ 1·080	r
	39 2	— 1·533	168·580·
	39 49	— 1·517	

At Beginning, Thermometer 34°5. Barometer 771 mm.
„ End „
Chronometer Correction. — 30ˢ Run + 1·0

1888, November 20. Telescope W.

Star.	Chronometer.	Micrometer.	Means.
	h m s		h m s
Standards.	5 39 9	— 1·018	5 45 19
	39 41	8 8 9 59	r
		2 54 5 6	513·710·
	41 24	— 0·980	
	41 57	7 48 0 8	
		2 33 5 4	
	43 35	0 13 0 0	h m s
		4 51 5 3	21 42 54
	45 17	+ 0·683	° ′ ″
	46 18	0 10 0 1	225 58 53
		4 51 5 2	
	47 29	+ 0·736	
			h m s
°			
+ 18·277	5 50 45	+ 1·150	5 53 43
	51 39	38 38·8	r
	52 12	+ 1·180	26·691
	52 37	20	h m s
	53 51	52	5 53 38
	54 45	— 1·487	° ′ ″
	56 24	50	182 10 0
	57 11	— 1·460	
			h m s
+ 18·277	5 59 20	— 1·408	6 1 56
	6 0 18	26	r
	1 6	— 1·382	26·853·
	1 47	11	h m s
	2 16	5	6 1 55
	2 49	+ 1·250	° ′ ″
	3 19	54	1 39 0
	4 30	+ 1·247	

Digitized by Google

1888, November 20. Telescope W.—*continued.*

Star.	Chronometer.	Micrometer.	Means.
°	h m s		h m s
+ 18·277	6 5 18	+ 1·273	6 7 56
	5 52	50	r
	6 38	+ 1·271	26·940
	7 28	39	h m s
	8 30	47	6 7 50
	8 59	— 1·357	° ′ ″
	9 30	50	1 16 30
	10 50	— 1·307	
			h m s
+ 18·277	6 12 36	— 1·268	6 15 11
	13 33	57	r
	13 58	— 1·313	27·143
	14 44	49	h m s
	15 55	4	6 15 36
	16 29	+ 1·414	° ′ ″
	17 11	9	180 59 45
	17 42	+ 1·454	
			h m s
+ 18·277	6 19 7	+ 1·434	6 20 58
	19 48	56	r
	20 6	+ 1·480	27·230
	20 45	56	h m s
	21 13	16	6 21 3
	21 35	— 1·203	° ′ ″
	22 26	10	180 37 30
	23 5	— 1·250	
			h m s
+ 18·277	6 25 6	— 1·207	6 28 10
	26 20	0	r
	26 55	— 1·144	27·347
	27 41	50	h m s
	28 52	32	6 28 17
	29 37	+ 1·490	° ′ ″
	30 16	23	180 11 15
	31 4	+ 1·555	
			h m s
Standards.	6 33 33	+ 0·780	6 37 51
	34 10	9 2 0 0	r
		4 49 5 6	513·930
	35 53	+ 0·788	
	36 30	9 40 0 10	
		5 16 5 6	
	38 26	9 17 2 41	h m s
		2 15 5 8	6 37 24
	39 53	— 0·848	° ′ ″
	40 33	6 0 9 20	45 58 15
		2 15 5 2	
	42 6	— 0·860	

At Beginning, Thermometer 31°·5. Barometer 771 mm.
„ End „ 29.
Chronometer Correction, — 32ˢ. Run — 4·5.

1888, November 20. Telescope E.

Star.	Chronometer.	Micrometer.	Means.
°	h m s		h m s
+ 18·277	13 1 52	— 1·380	13 4 36
	2 37	30 30	r
	3 22	— 1·308	37·016
	4 5	26	h m s
	4 56	56	13 4 32
	5 43	+ 1·367	° ′ ″
	6 31	46	162 39 30
	7 27	+ 1·354	
			h m s
+ 18·277	13 9 7	+ 1·396	13 11 55
	9 50	49	r
	10 49	+ 1·436	37·232
	11 28	44	h m s
	12 21	8	13 11 55
	13 14	— 1·200	° ′ ″
	14 2	8	342 27 15
	14 29	— 1·167	
			h m s
Standards.	5 19 38	— 0·767	5 23 57
	20 22	6 22 1 50	r
		0 9 4 50	514·116
	22 0	— 0·780	
	22 36	6 47 15 1	
		0 42 4 58	
	24 49	7 52 1 48	h m s
		1 45 5 9	5 23 38
	25 56	+ 0·913	° ′ ″
	26 46	7 2 1 56	45 55 32
		0 47 4 44	
	28 15	+ 0·867	
°			h m s
+ 18·277	13 32 48	+ 0·736	13 35 46
	33 54	1 2	r
	34 30	+ 0·740	37·892
	35 0	54	h m s
	36 5	24	13 35 42
	37 15	— 0·873	° ′ ″
	37 49	24	341 40 45
	38 32	— 0·818	
			h m s
+ 18·277	13 40 34	— 0·833	13 42 58
	41 15	14	r
	41 50	— 0·804	38·070
	42 39	12	h m s
	43 23	44	13 43 0
	43 55	+ 0·908	° ′ ″
	44 44	40	161 27 30
	45 32	+ 0·870	

At Beginning, Thermometer 21°. Barometer 772 mm.
„ End „ ——.
Chronometer Correction, — 32ˢ.

Digitized by Google

1888, November 21. Telescope W.

Star.	Chronometer.	Micrometer.	Means.
	h m s		h m s
Standards.	21 36 53	— 1·015	21 40 25
	37 27	9 26 1 24	r
		2 55 5 6	513·648
	38 50	— 0·996	
	39 24	9 29 1 0	
		3 32 5 10	
	41 0	1 22 1 19	h m s
		5 11 4 54	21 40 7
	42 10	+ 0·650	° ′ ″
	42 37	1 10 1 0	225 59 8
		5 0 5 7	
	43 47	+ 0·658	
°			h m s
+ 18·277	5 43 15	+ 1·073	5 45 58
	43 53	11 11	r
	44 39	+ 1·143	64·627
	45 45	11 11	h m s
	46 31	59·5 59·5	5 46 1
	47 20	— 1·471	° ′ ″
	47 54	0 0	143 5 22
	48 38	— 1·490	
			h m s
+ 18·277	5 51 35	— 1·410	5 54 13
	52 15	53·5 54	r
	53 19	— 1·405	64·868
	54 1	53·5 54	h m s
	54 47	11·5 12·5	5 54 16
	55 21	+ 1·271	° ′ ″
	56 1	11 11·5	323 2 44
	56 38	+ 1·281	
			h m s
+ 18·277	5 58 1	+ 1·314	6 0 58
	59 4	10 11·5	r
	59 38	+ 1·362	65·108
	6 0 17	7·5 8	h m s
	2 3	54 55	6 1 7
	2 36	— 1·280	° ′ ″
	3 5	49 50	323 0 37
	3 39	— 1·180	
			h m s
+ 18·277	6 5 27	— 1·241	6 8 22
	6 17	49 49·5	r
	7 3	— 1·243	65·303
	7 59	47·5 48	h m s
	9 4	58 58	6 8 25
	9 50	+ 1·541	° ′
	10 19	59 59	142 53 30
	11 9	+ 1·550	

1888, November 21. Telescope W.—*continued.*

Star.	Chronometer.	Micrometer.	Means.
	h m s		h m s
Standards.	22 19 18	+ 0·735	22 22 26
	19 52	9 32 0 21	r
		5 10 5 22	513·870
	21 8	+ 0·743	
	21 53	0 32 0 24	
		6 2 5 21	
	23 12	7 50 0 38	h m s
		3 13 5 18	22 22 28
	24 17	— 0·878	° ′ ″
	24 55	6 58 0 13	45 58 37
		2 32 5 2	
	26 3	— 0·859	

At Beginning, Thermometer 25.° Barometer 771 mm.
„ End „ 25.
Chronometer Correction, — 33s. Run — 1·0.

1888, November 21. Telescope E.

Star.	Chronometer.	Micrometer.	Means.
°	h m s		h m s
+ 18·277	12 55 33	+ 0·925	12 59 27
	56 17	48 48	r
	57 15	+ 0·939	78·350
	58 12	48 48·5	h m s
	59 45	30 30·5	12 59 19
	13 1 20	— 0·606	° ′ ″
	3 2	29 29·5	319 39 3
	3 41	— 0·558	
			h m s
+ 18·277	13 5 9	— 0·530	13 7 43
	5 42	27 27	r
	6 21	— 0·530	78·622
	6 50	27·5 28	h m s
	7 46	42 42	13 7 30
	9 1	+ 1·136	° ′ ″
	9 42	42 42	139 34 41
	10 12	+ 1·168	
			h m s
Standards.	5 18 56	+ 0·886	5 23 30
	19 38	8 45 2 0	r
		1 33 4 50	514·108
	21 7	+ 0·860	
	22 3	9 7 2 5	
		1 49 5 2	
	24 11	6 36 1 56	h m s
		9 21 4 48	5 23 3
	25 38	— 0·756	° ′ ″
	26 21	5 30 0 58	225 55 40
		9 9 4 48	
	28 20	— 0·774	

Digitized by Google

1888, November 21. Telescope E.—*continued.*

Star.	Chronometer.	Micrometer.	Means.
°	h m s		h m s
+ 18·277	13 25 36	+ 1·197	13 29 5
	26 23	19·5 19	r
	27 21	+ 1·209	79·289
	28 23	22 22·5	h m s
	29 44	31·5 31·5	13 29 0
	31 0	+ 1·480	° ′ ″
	31 30	32 32·5	139 26 18
	32 22	+ 1·504	
			h m s
+ 18·277	13 33 27	+ 1·530	13 36 11
	33 53	27 28	r
	34 48	+ 1·554	79·513
	35 41	30·5 31	h m s
	36 33	12·5 14	13 36 11
	37 14	— 1·046	° ′ ″
	38 39	11 12	319 20 44
	39 14	— 1·012	

At Beginning, Thermometer 18°·5. Barometer 769 mm.
„ End „ 17·5.
Chronometer Correction. — 33ˢ·

1888, November 22. Telescope W.

Star.	Chronometer.	Micrometer.	Means.
	h m s		h m s
Standards.	21 34 32	+ 0·649	21 38 48
	35 46	0 40 1 10	r
		4 40 4 31	513·672·
	36 49	+ 0·631	
	37 49	8 8 8 50	
		4 26 4 24	
	39 37	6 17 8 53	h m s
		2 35 4 30	21 38 42
	40 52	— 0·982	° ′ ″
	41 35	5 31 8 31	45 58 47
		2 6 4 20	
	42 59	— 0·953	
°			h m s
+ 18·277	5 37 29	— 0·929	5 39 50
	38 33	38 39	r
	39 10	34 35·5	107·861·
	39 47	— 0·880	h m s
	40 21	+ 0·762	5 40 0
	40 53	47 48	° ′ ″
	41 24	45·5 46·5	313 41 41
	41 45	+ 0·770	

1888, November 22. Telescope W.—*continued.*

Star.	Chronometer.	Micrometer.	Means.
°	h m s		h m s
+ 18·277	5 42 48	+ 0·810	5 45 52
	43 38	40·5 41	r
	44 19	40·5 40·5	108·071
	45 28	+ 0·855	h m s
	46 21	— 0·783	5 45 47
	47 12	38 38	° ′ ″
	48 1	35·5 35	133 38 37
	48 51	— 0·740	
			h m s
+ 18·277	5 49 29	— 0·703	5 52 9
	50 22	35 35	r
	50 53	33·5 33·5	108·261·
	51 26	— 0·730	h m s
	52 33	+ 0·956	5 52 16
	53 17	36 36·5	° ′ ″
	54 32	33·5 33·5	133 34 33
	55 8	+ 0·990	
			h m
+ 18·277	5 57 35	+ 1·048	5 59 50
	58 14	43 44	r
	59 6	41 42	108·506·
	59 33	+ 1·560	h m s
	6 0 10	— 1·555	5 59 53
	0 44	30·5 31·5	° ′ ″
	1 28	30 30·5	313 36 33
	2 1	— 1·540	
			h m s
+ 18·277	6 2 21	— 1·529	6 4 12
	2 57	29·5 30	r
	3 23	29·5 30	108·640
	3 44	— 1·484	h m s
	4 30	+ 1·123	6 4 15
	5 7	43 44	° ′ ″
	5 33	41 42	313 36 7
	6 14	+ 1·170	
			h m s
+ 18·277	6 8 37	+ 1·241	6 11 23
	9 34	32·5	r
	9 59	37· 37·5	108·901·
	10 52	+ 1·283	h m s
	11 54	— 1·353	6 11 28
	12 53	30·5 31	° ′ ″
	13 27	30 30	133 32 37
	14 9	— 1·368	

Digitized by Google

1888, November 22. Telescope W.—*continued.*

Star.	Chronometer.	Micrometer.	Means.
	h m s		h m s
Standards.	22 26 26	— 0·857	22 29 42
	27 13	7 33 0 41	r
		1 6 4 14	513·907·
	28 28	— 0·899	
	29 5	7 43 0 12	
		1 31 4 24	
	30 53	9 30 0 10	h m s
		3 28 4 20	22 29 51
	31 46	+ 0·803	o ′ ″
	32 14	9 32 0 6	225 58 14
		3 42 4 14	
	33 7	+ 0·768	

At Beginning, Thermometer 28°·5. Barometer 771 mm.
„ End „ 27°·0.
Chronometer Correction, — 33ˢ. Run — 3ˢ·5.

1888, November 22. Telescope E.

Star.	Chronometer.	Micrometer.	Means.
°	h m s		h m s
+ 18·277	12 48 50	+ 1·199	12 52 16
	49 43	17 17·5	r
	50 53	15·5 16	121·393
	51 51	+ 1·126	
	53 2	+ 1·490	h m s
	53 57	24 25	12 52 18
	54 39	22 22·5	o ′ ″
	55 20	+ 1·621	132 19 56
			h m s
+ 18·277	12 57 47	+ 1·614	13 0 19
	58 33	26 27·5	r
	59 11	23·5 24·5	121·666·
	59 44	+ 1·658	
	13 0 40	— 1·000	h m s
	1 18	13·5 15	13 0 19
	2 13	12 13	o ′ ″
	3 4	— 0·939	312 19 22
			h m s
Standards.	5 15 47	— 0·760	5 20 15
	16 20	5 24 0 47	r
		9 42 3 55	514·139
	18 7	— 0·766	
	18 41	4 51 0 48	
		9 11 4 10	

1888, November 22. Telescope E.—*continued.*

Star.	Chronometer.	Micrometer.	Means.
	h m s		
Standards.	5 20 43	5 42 0 46	h m s
		0 8 4 14	5 19 35
	22 6	+ 0·890	o ′ ″
	22 37	6 21 0 50	45 55 19
		0 49 4 3	
	25 1	+ 0·914	
°			h m s
+ 18·277	13 19 16	+ 0·940	13 21 38
	20 2	22 22·5	r
	20 40	19·5 20	122·330·
	21 9	+ 0·981	h m s
	22 5	— 0·620	13 21 41
	22 41	9·5 10	o ′ ″
	23 21	9·5 10	312 15 22
	24 4	— 0·640	
			h m s
+ 18·277	13 26 23	— 0·574	13 29 18
	27 24	10·5 11	r
	28 10	10 10·5	122·550·
	28 49	— 0·593	h m s
	29 48	+ 1·141	13 29 32
	30 57	16 17	o ′ ″
	31 36	16·5 17	132 13 33
	32 15	+ 1·127	

At Beginning, Thermometer, 16°. Barometer 772·5 mm.
„ End „ 14.
Chronometer Correction, — 33ˢ.

1888, December 6. Telescope W.

Star.	Chronometer.	Micrometer.	Means.
°	h m s		h m s
+ 16·247	4 58 57	+ 1·403	5 1 49
	5 0 5	+ 0·847	r
	0 50	14 16	123·099
	1 25	11 11·5	h m s
	2 22	6 6·5	5 1 57
	3 12	7 7	o ′ ″
	3 35	— 1·278	239 9 52
	4 30	— 0·774	
			h m s
+ 16·247	5 8 59	— 1·331	5 11 38
	9 33	— 0·831	r
	10 39	5·5 6	122·911·
	11 5	2 2·5	h m s
	11 58	12 13	5 11 34
	12 35	12·5 14·5	o ′ ″
	13 33	+ 1·268	59 8 30
	14 26	+ 0·717	

Digitized by Google

1888, December 6. Telescope W.—*continued.*

Star.	Chronometer.	Micrometer.	Means.
	h m s		h m s
Standards.	22 19 17	+ 0·730	22 23 43
	20 52	5 48 1 1	r
		0 45 5 3	513·914·
	22 45	8 14 9 24	
		4 49 5 10	
	24 58	5 18 9 9	
		2 15 5 1	h m s
	26 20	6 5 9 18	22 23 43
		2 53 4 58	° ′ ″
	27 55	— 0·813	45 57 6
	28 24	— 0·818	
°			h m s
+ 16·247	5 28 1	— 1·481	5 31 46
	28 58	— 1·019	r
	29 51	2 3	122·528·
	30 42	1·5 2·5	h m s
	31 52	9·5 10	5 31 23
	33 6	10·5 11·5	° ′ ″
	34 35	+ 1·009	59 6 18
	35 29	+ 1·548	
			h m s
+ 16·247	5 37 51	+ 1·010	5 40 37
	38 35	+ 1·548	r
	39 30	10·5 10·5	122·393
	40 15	12 12·5	h m s
	41 16	0·5 1	5 40 45
	42 1	0 0·5	° ′ ″
	42 30	+ 1·620	239 5 56
	43 33	+ 1·152	

At Beginning, Thermometer 27°·5. Barometer 758 mm.
„ End „ 26.
Chronometer Correction, — 49ˢ·

1888, December 6. Telescope E.

Star.	Chronometer.	Micrometer.	Means.
°	h m s		h m s
+ 16·247	12 12 7	+ 1·285	12 14 47
	12 53	+ 0·770	r
	13 31	31·5 32	114·926·
	14 10	30 30	h m s
	15 8	20·5 21	12 14 43
	16 2	22·5 23	° ′ ″
	16 50	— 1·358	238 26 18
	17 19	— 0·844	

1888, December 6.—Telescope E.—*continued.*

Star.	Chronometer.	Micrometer.	Means.
°	h m s		h m s
+ 16·247	12 18 53	— 1·419	12 21 38
	19 30	— 0·880	r
	20 49	23·5 24·5	114·777·
	21 20	20·5 21	h m s
	22 2	28 28·5	12 21 47
	22 59	29 29·5	° ′ ″
	23 53	+ 1·176	58 25 33
	24 17	+ 1·678	
			h m s
Standards.	5 30 42	+ 0·970	5 35 16
	31 42	+ 1·407	r
	32 24	4 33 8 24	514·192
		2 15 4 51	
	34 4	4 15 8 18	
		2 0 4 48	
	36 25	3 31 8 10	h m s
		1 17 5 4	5 35 9
	37 46	2 52 8 34	° ′ ″
		0 38 4 55	45 55 57
	39 3	— 0·751	
	39 37	— 1·242	
°			h m s
+ 16·247	12 38 8	— 1·563	12 40 45
	38 48	— 1·126	r
	39 44	22 23	114·421
	40 22	20 20	h m s
	41 22	25 26	12 40 54
	42 8	26 27·5	° ′ ″
	42 34	+ 0·984	58 23 46
	43 29	+ 1·547	
			h m s
+ 16·247	12 45 18	+ 0·970	12 47 43
	45 55	+ 1·460	r
	46 50	29·5 29·5	114·294·
	47 36	27 27	h m s
	48 39	20 20	12 48 3
	49 17	19·5 20	° ′ ″
	49 29	— 1·651	238 24 3
	50 10	— 1·190	

At Beginning, Thermometer 23°. Barometer 760 mm.
„ End „ 23.
Chronometer Correction, — 49ˢ·

Digitized by Google

YALE HELIOMETER OBSERVATIONS OF IRIS.

OBSERVER : HALL.

1888, October 16. Telescope W.

Star.	Chronometer.	Micrometer.	Means.
°	h m s		h m s
+ 24·376	9 27 24	− 0·924	9 31 49
	30 29	− 1·078	r
	33 5	+ 0·717	201·732
	36 20	+ 0·749	
			h m s
+ 22·354	9 50 25	− 0·742	9 54 34
	52 53	− 0·890	r
	55 59	+ 0·811	407·969
	58 58	+ 0·759	
			h m s
+ 22·354	10 0 37	+ 1·690	10 4 3
	2 46	+ 0·621	r
	5 37	− 0·984	407·626
	7 14	− 1·075	
			h m s
+ 24·376	11 14 53	− 1·091	10 17 11
	16 6	− 1·112	r
	18 15	+ 1·518	203·437
	19 31	+ 1·560	

At Beginning. Thermometer 45°. Barometer 761 mm.
„ End „
Chronometer Correction, − 5s. Run + 3.

1888, October 17. Telescope W.

Star.	Chronometer.	Micrometer.	Means.
°	h m s		h m s
+ 24·376	8 48 4	− 0·905	8 50 49
	49 54	− 0·768	r
	51 52	+ 0·834	247·982
	53 29	+ 0·804	
			h m s
+ 22·354	9 0 0	+ 1·120	9 2 31
	0 15	+ 1·138	r
	4 12	− 0·607	359·525
	5 39	− 0·601	

1888, October 17. Telescope W.—*continued.*

Star.	Chronometer.	Micrometer.	Means.
°	h m s		h m s
+ 22·354	9 7 16	− 0·661	9 9 38
	8 27	− 0·664	r
	10 55	+ 0·907	359·240
	11 54	+ 0·899	
			h m s
+ 24·376	9 15 42	+ 1·294	9 18 33
	17 27	+ 1·251	r
	19 40	− 1·347	247·964
	21 25	− 1·269	
			h m s
+ 24·376	9 27 46	− 1·201	9 30 54
	29 43	− 1·073	r
	31 57	+ 1·524	248·381
	34 12	+ 1·512	
			h m s
+ 22·354	9 37 22	+ 1·421	9 40 2
	38 43	+ 1·430	r
	40 45	− 1·276	358·133
	43 47	− 1·309	
			h m s
+ 22·354	9 44 23	− 1·350	9 47 38
	46 31	− 1·360	r
	48 12	+ 1·237	357·858
	51 27	+ 1·190	
			h m s
+ 24·376	9 53 50	+ 0·946	9 56 7
	55 10	+ 0·922	r
	57 1	− 0·700	250·280
	58 29	− 1·603	

At Beginning. Thermometer 42°. Barometer 760 mm.
„ End „ 40°5.
Chronometer Correction, + 6s.
Definition 3–2. Run + 1.

Digitized by Google

1888, October 17. Telescope E.				1888, October 18. Telescope W.			
Star.	Chronometer.	Micrometer.	Means.	Star.	Chronometer.	Micrometer.	Means.
°	h m s		h m s	°	h m s		h m s
+ 22·354	15 41 17	− 1·595	15 44 29	+ 24·376	8 25 4	+ 1·432	8 27 44
	42 41	− 0·606	r		26 56	+ 1·573	r
	46 2	+ 0·912	344·296		28 51	− 1·362	298·092
	47 57	+ 0·882			30 6	− 1·458	
			h m s				h m s
+ 24·376	15 53 12	+ 1·012	15 56 11	+ 22·354	8 33 40	− 0·732	8 35 45
	54 54	+ 0·982	r		35 13	− 0·733	r
	57 12	− 0·610	263·452		36 29	+ 1·241	308·473
	59 27	− 1·479			37 37	+ 1·170	
			h m s				h m s
+ 24·376	16 1 42	− 1·529	16 4 43	+ 22·354	8 38 53	+ 1·181	8 40 58
	3 21	− 1·420	r		39 56	+ 1·186	r
	6 7	+ 1·250	263·758		41 47	− 0·849	308·325
	7 41	+ 1·216			42 57	− 0·868	
			h m s				h m s
+ 22·354	16 12 8	+ 1·437	16 15 0	+ 24·376	8 46 4	− 1·184	8 48 26
	14 3	+ 1·359	r		47 40	− 1·008	r
	15 45	− 1·265	343·110		49 21	+ 1·020	298·877
	18 4	− 1·310			50 39	+ 0·926	
			h m s				h m s
+ 22·354	16 26 28	− 1·474	16 29 39	+ 24·376	8 54 56	+ 1·072	8 56 43
	28 21	− 1·550	r		55 57	+ 0·972	r
	30 51	+ 1·046	342·508		57 28	− 0·939	299·137
	32 56	+ 0·993			58 30	− 0·830	
			h m s				h m s
+ 24·376	16 38 52	+ 0·722	16 41 36	+ 22·354	9 1 41	− 1·260	9 3 46
	40 56	+ 0·854	r		2 46	− 1·276	r
	42 35	− 0·711	265·053		4 31	+ 0·718	307·418
	44 2	− 0·758			6 8	+ 0·654	
			h m s				h m s
+ 24·376	16 45 44	− 0·649	16 48 57	+ 22·354	9 7 1	+ 0·652	9 8 41
	47 15	− 0·719	r		8 3	+ 0·636	r
	49 56	+ 0·941	265·294		9 19	− 1·380	307·243
	52 52	+ 1·015			10 20	− 1·416	
			h m s				h m s
+ 22·354	16 59 42	+ 1·452	17 2 36	+ 24·376	9 13 27	− 1·551	9 15 45
	17 1 20	+ 1·438	r		15 20	− 1·625	r
	3 51	− 1·232	341·202		16 38	+ 1·397	299·872
	5 31	− 1·253			17 35	+ 1·524	
At Beginning, Thermometer 38. Barometer 761 mm.				At Beginning, Thermometer 43°. Barometer 764 mm.			
,, End ,, 36.				,, End ,, 43·5.			
Chronometer Correction, + 6s. Definition 3–2. Run + 2.				Chronometer Correction, + 6s. Definition 1–2. Run + 2.			

Digitized by Google

1888, October 18. Telescope E.

Star.	Chronometer.	Micrometer.	Means.
°	h m s		h m s
+ 22·354	15 51 15	— 0·758	15 54 6
	53 23	— 0·803	r
	55 15	+ 1·143	291·366
	56 30	+ 1·151	
+ 24·376	16 0 42	+ 0·667	h m s
	2 19	+ 0·580	16 3 12
	4 7	— 1·381	r
	5 40	— 1·254	315·306
+ 24·376	16 7 3	— 1·226	h m s
	8 35	— 1·312	16 9 30
	10 35	+ 0·729	r
	11 49	+ 0·869	315·530
+ 22·354	16 15 54	+ 0·761	h m s
	17 28	+ 0·732	16 18 26
	19 22	— 1·321	r
	20 59	— 1·369	290·402
+ 22·354	16 24 40	— 1·421	h m s
	25 54	— 1·438	16 26 36
	27 21	+ 1·516	r
	28 30	+ 1·516	290·086
+ 24·376	16 32 7	+ 1·138	h m s
	33 26	+ 1·253	16 34 32
	35 27	— 0·710	r
	37 9	— 0·750	316·466
+ 24·376	16 39 37	— 0·710	h m s
	40 39	— 0·591	16 42 5
	43 7	+ 1·421	r
	44 57	+ 1·349	316·734
+ 22·354	16 48 58	+ 1·061	h m s
	50 37	+ 1·066	16 52 9
	53 13	— 0·973	r
	55 49	— 1·011	289·072

At Beginning, Thermometer 31°·5. Barometer 763 mm.
„ End „ 31°.
Chronometer Correction, + 6ˢ. Definition 2. Run + 3.

1888, October 20. Telescope E.

Star.	Chronometer.	Micrometer.	Means.
°	h m s		h m s
+ 24·376	15 48 51	+ 1·508	15 52 4
	50 52	+ 1·372	r
	53 55	— 0·578	424·962
	54 39	— 1·379	
+ 22·354	15 59 14	— 1·390	h m s
	16 0 13	— 1·398	16 2 37
	4 41	+ 1·526	r
	6 21	+ 1·482	181·110
+ 22·354	16 7 40	+ 1·467	h m s
	9 33	+ 1·440	16 10 20
	11 9	— 0·626	r
	12 58	— 0·636	180·822
+ 24·376	16 18 13	— 1·110	h m s
	20 57	— 0·914	16 23 1
	25 20	+ 1·189	r
	27 17	+ 1·106	426·136
+ 24·376	16 33 25	+ 1·369	h m s
	36 33	+ 1·226	16 37 54
	39 38	— 0·684	r
	41 59	— 1·518	426·696
+ 22·354	16 47 43	— 1·414	h m s
	50 1	— 1·443	16 50 45
	51 39	+ 1·518	r
	53 39	+ 1·508	179·085
+ 22·354	16 55 1	+ 1·483	h m s
	56 43	+ 1·452	16 58 29
	59 44	— 0·629	r
	17 2 28	— 0·720	178·793
+ 24·376	17 12 1	— 1·110	h m s
	14 59	— 0·924	17 16 2
	17 6	+ 1·146	r
	20 4	+ 1·056	428·084

At Beginning, Thermometer 36°. Barometer 765 mm.
„ End „ 33°·5.
Chronometer Correction, + 5ˢ. Definition 2. Run — 1.

Digitized by Google

1888, October 21. Telescope W.

Star.	Chronometer.	Micrometer.	Means.
°	h m s		h m s
+ 24·376	9 26 11	− 0·639	9 30 15
	27 29	− 1·426	r
	30 42	+ 0·622	465·080.
	36 40	+ 1·604	
			h m s
+ 22·354	9 42 23	+ 1·542	9 44 17
	43 32	+ 1·514	r
	45 9	− 1·532	139·998·
	46 4	− 1·527	
			h m s
+ 22·354	9 47 39	− 1·563	9 49 47
	48 45	− 1·590	r
	50 2	+ 1·378	139·771
	52 43	+ 1·317	
			h m s
+ 24·376	9 55 59	+ 0·953	9 58 9
	57 8	+ 1·186	r
	58 56	− 0·741	466·252
	10 0 34	− 0·894	
			h m s
+ 24·376	10 3 4	− 0·683	10 5 38
	4 46	− 0·861	r
	6 29	+ 1·243	466·546
	8 15	+ 1·394	
			h m s
+ 22·354	10 11 49	+ 0·919	10 13 55
	13 6	+ 0·923	r
	14 31	− 1·099	138·794
	16 14	− 1·154	
			h m s
+ 22·354	10 17 28	− 1·173	10 19 28
	18 31	− 1·209	r
	20 27	+ 0·730	138·543·
	21 27	+ 0·739	
			h m s
+ 24·376	10 25 9	+ 0·751	10 27 34
	26 34	+ 0·643	r
	28 3	− 1·349	467·456
	30 29	− 1·133	

At Beginning, Thermometer 33°·5. Barometer 765 mm.
„ End „ 33·
Chronometer Correction, + 4ˢ. Definition 2. Run 0.

1888, October 21. Telescope E.

Star.	Chronometer.	Micrometer.	Means.
°	h m s		h m s
+ 22·354	15 28 18	+ 1·242	15 30 58
	29 30	+ 1·224	r
	32 10	− 0·838	125·376
	33 56	− 0·876	
			h m s
+ 24·376	15 38 2	− 0·767	15 40 36
	39 31	− 0·874	r
	41 36	+ 1·189	480·493
	43 14	+ 1·438	
			h m s
+ 24·376	15 45 30	+ 1·458	15 48 39
	47 59	+ 1·341	r
	49 49	− 0·648	480·844
	51 20	− 1·464	
			h m s
+ 22·354	15 55 4	− 1·342	15 57 58
	57 9	− 1·363	r
	59 6	+ 0·619	124·245
	16 0 35	+ 0·576	
			h m s
+ 22·354	16 5 19	+ 1·450	16 7 35
	7 3	+ 1·421	r
	8 19	− 1·609	123·826·
	9 38	− 1·611	
			h m s
+ 24·376	16 13 34	− 1·011	16 16 4
	14 58	− 1·167	r
	16 57	+ 0·859	481·882·
	18 47	+ 1·082	
			h m s
+ 24·376	16 20 4	+ 1·158	16 22 24
	21 22	+ 0·994	r
	23 19	− 0·963	482·195
	24 50	− 0·799	
			h m s
+ 22·354	16 32 39	− 1·122	16 35 34
	34 9	− 1·150	r
	36 48	+ 0·802	122·642·
	38 40	+ 0·753	

At Beginning, Thermometer 29°·5. Barometer 766 mm.
„ End „ 31.
Chronometer Correction, + 4ˢ. Definition 2. Run + 3.

Digitized by Google

1888, October 29. Telescope W.

Star.	Chronometer.	Micrometer.	Means.
°	h m s		h m s
+ 22·347	8 16 37	+ 1·326	8 18 35
	17 50	+ 1·294	r
	19 14	— 0·693	147·660
	20 41	— 0·608	
			h m s
+ 21·321	8 24 35	— 1·229	8 27 21
	25 59	— 1·243	r
	28 19	+ 0·699	472·446
	30 30	+ 0·666	
			h m s
+ 21·321	8 31 22	+ 0·623	8 34 9
	33 37	+ 0·652	r
	35 21	— 1·459	472·141
	36 18	— 1·534	
			h m s
+ 22·347	8 39 53	— 1·248	8 42 9
	41 34	— 1·182	r
	42 50	+ 0·876	148·690
	44 18	+ 0·935	
			h m s
+ 22·347	8 47 28	+ 1·014	8 49 1
	48 19	+ 0·985	r
	49 25	— 0·990	149·036
	50 52	— 0·938	
			h m s
+ 21·321	8 54 18	— 0·919	8 56 21
	55 39	— 0·923	r
	57 10	+ 1·029	471·080
	58 19	+ 0·972	
			h m s
+ 21·321	9 0 11	+ 1·006	9 2 57
	2 17	+ 0·928	r
	4 0	— 1·158	470·810
	5 19	— 1·157	
			h m s
+ 22·347	9 9 20	— 1·530	9 12 58
	12 17	— 1·514	r
	13 48	+ 1·576	150·086
	16 29	+ 1·659	

At Beginning, Thermometer 39°8. Barometer 756·5 mm.
„ End „ 39·3.
Chronometer Correction, — 6s. Definition 2. Run + 3.

1888, October 29. Telescope E.

Star.	Chronometer.	Micrometer.	Means.
°	h m s		h m s
+ 22·347	14 43 58	+ 1·153	14 47 18
	46 39	+ 1·186	r
	47 58	— 0·768	165·422
	50 19	— 0·727	
			h m s
+ 21·321	14 56 52	— 0·567	14 59 56
	58 24	— 0·648	r
	15 1 1	+ 1·353	453·703
	3 28	+ 1·268	
			h m s
+ 21·321	15 4 37	+ 1·269	15 7 1
	5 57	+ 1·221	r
	7 55	— 0·839	453·384
	9 35	— 0·884	
			h m s
+ 22·347	15 14 34	— 1·189	15 17 2
	16 1	— 1·139	r
	17 56	+ 0·910	166·772
	19 38	+ 0·962	
			h m s
+ 22·347	15 23 34	+ 1 066	15 26 4
	25 23	+ 1·092	r
	26 58	— 0·897	167·192
	28 20	— 0·877	
			h m s
+ 21·321	15 33 20	— 1·495	15 36 1
	34 50	— 1·539	r
	37 17	+ 1·432	451·887
	38 36	+ 1·376	
			h m s
+ 21·321	15 39 31	+ 1·391	15 42 54
	40 54	+ 1·351	r
	44 13	— 0·750	451·588
	46 57	— 0·816	
			h m s
+ 22·347	15 51 23	— 1·377	15 53 48
	52 26	— 1·337	r
	54 42	+ 0·738	168·398
	56 42	+ 0·773	

At Beginning, Thermometer 36°5. Barometer 758 mm.
„ End „ 36·0.
Chronometer Correction, — 6s. Definition 2. Run — 1.

Digitized by Google

1888, October 30. Telescope W.

Star.	Chronometer.	Micrometer.	Means.
°	h m s		h m s
+ 21·321	8 23 26	+ 1·086	8 25 31
	24 56	+ 1·070	r
	26 39	− 0·978	407·084·
	27 2	− 1·009	
			h m s
+ 22·347	8 31 27	− 0·602	8 33 45
	33 3	− 0·554	r
	34 41	+ 1·496	211·934·
	35 49	+ 1·527	
			h m s
+ 22·347	8 36 50	+ 1·596	8 28 28
	37 56	+ 1·590	r
	39 6	− 1·428	212·183
	39 59	− 1·392	
			h m s
+ 21·321	8 44 27	− 1·398	8 46 45
	45 47	− 1·410	r
	46 56	+ 1·593	406·168·
	47 49	+ 1·552	
			h m s
+ 21·321	8 52 2	+ 1·433	8 53 46
	53 1	+ 1·426	r
	54 24	− 1·600	405·804
	55 37	− 1·651	
			h m s
+ 22·347	8 58 22	− 0·983	9 0 13
	59 41	− 0·963	r
	9 0 53	+ 1·118	213·160
	1 58	+ 1·148	
			h m s
+ 22·347	9 3 5	+ 1·159	9 5 10
	4 16	+ 1·170	r
	6 8	− 0·788	213·391
	7 13	− 0·759	
			h m s
+ 21·321	9 10 21	− 1·000	9 12 17
	11 12	− 1·028	r
	13 6	+ 0·930	404·902
	14 28	+ 0·902	

At Beginning, Thermometer 33°. Barometer 768 mm.
„ End „ 31.
Chronometer Correction, − 7ˢ. Definition 2. Run + 5.

1888, October 30. Telescope E.

Star.	Chronometer.	Micrometer.	Means.
°	h m s		h m s
+ 22·347	14 43 2	+ 1·474	14 46 4
	44 32	+ 1·499	r
	47 30	− 1·088	229·414
	49 12	− 1·057	
			h m s
+ 21·321	14 55 35	− 0·621	14 58 19
	57 13	− 0·666	r
	59 27	+ 0·919	388·276·
	15 3 1	+ 0·911	
			h m s
+ 21·321	15 2 33	+ 0·884	15 4 41
	3 43	+ 0·832	r
	5 39	− 0·857	387·966
	6 51	− 0·927	
			h m s
+ 22·347	15 10 34	− 1·562	15 12 32
	11 39	− 1·544	r
	13 14	+ 1·169	230·613
	14 52	+ 1·163	
			h m s
+ 22·347	15 24 34	+ 1·432	15 26 38
	25 58	+ 1·460	r
	27 16	− 1·200	231·262·
	28 45	− 1·167	
			h m s
+ 21·321	15 32 16	− 1·540	15 34 32
	33 34	− 1·569	r
	35 8	+ 1·050	386·480·
	37 9	+ 1·020	
			h m s
+ 21·321	15 38 55	+ 0·966	15 40 48
	39 53	+ 0·932	r
	41 44	− 0·772	386·168·
	42 42	− 0·789	
			h m s
+ 22·347	15 47 26	− 0·740	15 50 33
	49 56	− 0·683	r
	51 5	+ 1·007	232·330·
	53 45	+ 1·077	

At Beginning, Thermometer 27°·5. Barometer 767 mm.
„ End „ 30°·0. „ 767·5 „
Chronometer Correction, − 7ˢ.
Definition 2. Run − 1. Clock running badly.

Digitized by Google

1888, October 31. Telescope W.

Star.	Chronometer.	Micrometer.	Means.
°	h m s		h m s
+ 22·347	8 2 49	+ 0·520	8 5 17
	4 21	+ 0·577	r
	6 18	— 1·012	275·532·
	7 40	— 1·022	
			h m s
+ 21·321	8 16 4	— 0·810	8 18 31
	16 59	— 0·808	r
	19 59	+ 0·766	341·947
	21 3	+ 0·746	
			h m s
+ 21·321	8 21 59	+ 0·716	8 23 38
	22 52	+ 0·693	r
	24 23	— 0·968	341·716
	25 17	— 1·009	
			h m s
+ 22·347	8 27 59	— 1·522	8 29 56
	29 18	— 1·520	r
	30 47	+ 1·173	276·678
	31 39	+ 1·225	
			h m s
+ 22·347	8 34 57	+ 1·279	8 36 36
	36 3	+ 1·313	r
	37 9	— 1·337	276·988·
	38 14	— 1·278	
			h m s
+ 21·321	8 42 25	— 1·430	8 44 5
	43 25	— 1·478	r
	44 48	+ 1·168	340·696·
	45 43	+ 1·130	
			h m s
+ 21·321	8 46 34	+ 1·129	8 48 16
	47 19	+ 1·134	r
	48 55	— 1·568	340·542·
	50 15	— 1·612	
			h m s
+ 22·347	8 53 5	— 0·997	8 55 19
	54 0	— 0·916	r
	56 27	+ 0·793	277·846·
	57 43	+ 0·811	

At Beginning, Thermometer 47°·0. Barometer 767 mm.
„ End „ 47°·5.
Chronometer Correction, — 8ˢ. Definition 3. Run — 2.

1888, October 31. Telescope E.

Star.	Chronometer.	Micrometer.	Means.
°	h m s		h m s
+ 21·321	15 19 3	— 1·023	15 21 13
	20 25	— 0·976	r
	21 56	+ 0·599	321·579
	23 29	+ 0·559	
			h m s
+ 21·321	15 24 49	+ 0·630	15 27 2
	26 18	+ 0·638	r *
	27 49	— 1·122	341·546·
	29 12	— 1·053	
			h m s
+ 22·347	15 32 47	— 1·492	15 34 44
	34 4	— 1·517	r
	35 17	+ 1·224	296·742·
	36 50	+ 1·268	
			h m s
+ 22·347	15 39 6	+ 1·300	15 40 57
	40 13	+ 1·316	r
	41 43	— 1·380	296·968
	42 47	— 1·301	
			h m s
+ 21·321	15 49 38	— 0·701	15 51 29
	50 38	— 0·702	r
	51 53	+ 0·920	320·203
	53 48	+ 0·889	

* This is not an observation of Iris and + 21°·321.

At Beginning, Thermometer 46°·0. Barometer 767 mm.
„ End „ 45°·5.
Chronometer Correction, — 8ˢ. Definition 2. Run — 4.
Some haze at first, and a wrong star was observed for + 22°·347 in commencing.

1888, November 1. Telescope W.

Star.	Chronometer.	Micrometer.	Means.
°	h m s		h m s
+ 22·347	8 29 58	+ 0·973	8 32 48
	31 58	+ 1·033	r
	33 42	— 1·601	342·411
	35 35	— 1·583	
			h m s
+ 21·321	8 39 29	— 0·966	8 42 8
	41 8	— 1·050	r
	43 6	+ 1·570	275·541
	44 49	+ 1·528	

Digitized by Google

1888, November 1. Telescope W.—*continued.*

Star.	Chronometer.	Micrometer.	Means.
°	h m s		h m s
+ 21·321	8 45 48	+ 1·520	8 48 32
	47 46	+ 1·457	r
	49 37	— 1·266	275 219
	50 59	— 1·273	
			h m s
+ 22·347	8 54 59	— 0·095	8 57 38
	56 9	— 1·100	r
	59 6	+ 0·670	343·583
	9 0 20	+ 0·691	

At Beginning, Thermometer 50°·5. Barometer 768 mm.
„ End „ 51·5.
Chronometer Correction, — 9ˢ. Definition ——. Run + 5.

1888, November 1. Telescope E.

Star.	Chronometer.	Micrometer.	Means.
°	h m s		h m
+ 21·321	14 45 16	+ 1·023	14 47 58
	46 37	+ 0·966	r
	49 6	— 0·787	258·192
	50 55	— 0·817	
			h m s
+ 22·347	14 55 35	— 0·528	14 59 28
	58 10	— 0·487	r
	15 0 55	+ 1·240	360·754
	3 14	+ 1·283	
			h m s
+ 22·347	15 4 45	+ 1·351	15 7 42
	6 37	+ 1·359	r
	8 33	— 1·248	361·110
	10 52	— 1·242	
			h m s
+ 21·321	15 16 2	— 1·462	15 18 20
	17 38	— 1·526	r
	19 5	+ 1·190	256·681
	20 34	+ 1·160	
			h m s
+ 21·321	15 25 3	+ 1·050	15 27 59
	27 3	+ 0·934	r
	29 10	— 0·773	256·210
	30 40	— 0·792	

1888, November 1. Telescope E.—*continued.*

Star.	Chronometer.	Micrometer.	Means.
°	h m s		h m s
+ 22·347	15 34 15	— 0·626	15 37 45
	36 35	— 0·608	r
	38 39	+ 1·106	362·490
	40 54	+ 1·109	
			h m s
+ 22·347	15 42 20	+ 1·169	15 46 40
	44 9	+ 1·226	r
	47 59	— 1·316	362·923
	52 12	— 1·233	
			h m s
+ 21·321	15 58 24	— 1·488	16 1 43
	16 0 23	— 1·487	r
	2 58	+ 1·095	254·607
	5 6	+ 1·094	

At Beginning, Thermometer 47°·5. Barometer 767·0 mm.
„ End „ 47·5. „ 766·5 „
Chronometer Correction, — 9ˢ. Definition 2–1; but misty. Run 0.

1888, November 3. Telescope W.

Star.	Chronometer.	Micrometer.	Means.
°	h m s		h m s
+ 22·347	7 53 5	— 0·663	7 56 1
	54 19	— 0·662	r
	57 36	+ 1·221	472·508
	59 4	+ 1·119	
			h m s
+ 21·321	8 5 33	+ 1·013	8 7 27
	6 24	+ 0·952	r
	8 27	— 0·786	150·196
	9 25	— 0·788	
			h m s
+ 21·321	8 10 12	— 0·763	8 12 4
	11 13	— 0·857	r
	12 49	+ 0·817	149·998
	14 1	+ 0·799	
			h m s
+ 22·347	8 17 3	+ 0·551	8 19 9
	18 0	+ 0·641	r
	20 8	— 1·006	473·574
	21 26	— 1·038	
			h m s
+ 22·347	8 23 33	— 0·930	8 25 31
	24 36	— 0·923	r
	26 24	+ 0·814	473·916
	27 33	+ 0·870	

Digitized by Google

1888, November 3. Telescope W.—*continued.*

Star.	Chronometer.	Micrometer.	Means.
°	h m s		h m s
+ 21·321	8 31 29	+ 1·417	8 38 36
	33 1	+ 1·371	r
	34 24	— 1·333	149·062
	35 29	— 1·332	
			h m s
+ 21·321	8 36 22	— 1·400	8 38 19
	37 50	— 1·411	r
	39 0	+ 1·231	148·828
	40 6	+ 1·236	
			h m s
+ 22·347	8 44 18	+ 1·257	8 46 31
	45 5	+ 1·259	r
	47 26	— 1·360	474·888
	49 15	— 1·379	

At Beginning, Thermometer 45°·5. Barometer 759·5 mm.
„ End „ 44·0. „ 760·5 „
Chronometer Correction. — 11ˢ. Definition 2. Run — 1.

1888, November 3. Telescope E.

Star.	Chronometer.	Micrometer.	Means.
°	h m s		h m s
+ 22·347	14 48 24	— 0·822	14 50 50
	49 37	— 0·755	r
	51 34	+ 0·939	492·180
	53 46	+ 0·998	
			h m s
+ 22·347	14 54 51	+ 1·028	14 57 9
	55 58	+ 1·050	r
	58 25	— 0·608	492·443
	59 21	— 0·583	
			h m s
+ 22·347	15 20 53	— 0·105	15 23 14
	22 11	— 0·070	r
	24 13	+ 0·669	493·600·
	25 39	+ 0·707	
			h m s
+ 22·347	15 26 56	+ 0·740	15 29 4
	28 11	+ 0·743	r
	29 48	— 0·881	493·870·
	31 22	— 0·862	

At Beginning, Thermometer 37°. Barometer 762 mm.
„ End „ 37. „ 762·5 „
Chronometer Correction, — 11ˢ. Run + 1.
A wrong star was observed for + 21°·321.

1888, November 7. Telescope W.

Star.	Chronometer.	Micrometer.	Means.
°	h m s		h m s
+ 20·388	7 39 35	+ 0·867	7 42 39
	41 33	+ 0·942	r
	43 45	— 0·631	400·289·
	45 43	— 0·599	
			h m s
+ 20·341	7 50 28	— 0·962	7 52 9
	51 21	— 0·986	r
	52 52	+ 0·651	421·676·
	53 57	+ 0·650	
			h m s
+ 20·341	7 54 44	+ 0·640	7 56 39
	55 29	+ 0·638	r
	57 29	— 1·089	421·518
	58 55	— 1·153	
			h m s
+ 20·388	8 2 41	— 1·296	8 5 2
	4 5	— 1·370	r
	5 31	+ 1·387	401·091
	7 52	+ 1·461	
			h m s
+ 20·388	8 9 36	+ 1·532	8 12 5
	11 0	+ 1·495	r
	12 28	— 1·232	401·334·
	15 16	— 1·126	
			h m s
+ 20·341	8 20 11	— 1·471	8 21 57
	21 20	— 1·547	r
	22 39	+ 1·160	420·641·
	23 37	+ 1·141	
			h m s
+ 20·341	8 26 6	+ 1·057	8 28 19
	27 9	+ 1·021	r
	29 8	— 0·652	420·351
	30 52	— 0·723	
			h m s
+ 20·388	9 8 26	— 1·159	9 11 11
	9 22	— 1·136	r
	12 14	+ 0·627	403·500
	14 13	+ 0·670	

At Beginning, Thermometer 45°·5. Barometer 768 mm.
„ End „ 43.
Chronometer Correction, — 18ˢ. Definition 2. Run 0.

Digitized by Google

1888, November 13. Telescope W.

Star.	Chronometer.	Micrometer.	Means.
°	h m s		h m s
+ 19·340	6 56 31	+ 0·667	6 59 2
	58 4	+ 0·661	r
	7 0 8	− 0·972	343·686
	1 24	− 0·994	
			h m s
+ 19·324	7 5 34	− 0·729	7 9 19
	9 20	− 0·792	r
	10 44	+ 0·883	494·115·
	11 38	+ 0·869	
			h m s
+ 19·324	7 13 39	+ 0·834	7 15 25
	14 54	+ 0·798	r
	16 9	− 0·900	493·916
	16 58	− 0·900	
			h m s
+ 19·340	7 19 41	− 0·848	7 22 26
	20 49	− 0·887	r
	24 11	+ 0·823	343·964·
	25 5	+ 0·843	
			h m s
+ 19·340	7 28 29	+ 0·883	7 30 45
	30 57	+ 0·872	r
	31 16	− 0·813	344·072
	32 19	− 0·799	
			h m s
+ 19·324	7 35 11	− 1·158	7 37 3
	36 10	− 1·157	r
	37 35	+ 1·509	493·324
	39 16	+ 1·451	
			h m s
+ 19·324	7 40 57	+ 1·428	7 42 38
	41 53	+ 1·441	r
	43 21	− 1·262	493·165·
	44 20	− 1·276	
			h m s
+ 19·340	7 47 51	− 0·707	7 49 46
	49 12	− 0·708	r
	50 38	+ 0·973	344·268·
	51 25	+ 0·978	

At Beginning, Thermometer 36°·7. Barometer 772·5 mm.
„ End „ 36·7.
Chronometer Correction, − 28ˢ. Definition 2-3. Run + 2.

1888, November 13. Telescope E.

Star.	Chronometer.	Micrometer.	Means.
°	h m s		h m s
+ 19·324	13 45 2	+ 1·289	13 47 33
	46 27	+ 1·262	r
	48 35	− 1·447	482·829·
	50 7	− 1·445	
			h m s
+ 19·340	13 55 4	− 1·561	13 58 43
	57 19	− 1·528	r
	14 0 2	+ 1·107	348·553·
	2 26	+ 1·089	
			h m s
+ 19·340	14 3 34	+ 1·133	14 6 30
	5 28	+ 1·150	r
	7 45	− 1·537	348·624·
	9 14	− 1·497	
			h m s
+ 19·324	14 16 22	− 0·837	14 20 12
	19 1	− 0·881	r
	21 16	+ 0·987	482·008
	24 11	+ 0·746	
			h m s
+ 19·324	14 27 49	+ 0·698	14 30 44
	29 27	+ 0·691	r
	31 53	− 1·069	481·634
	33 46	− 1·052	
			h m s
+ 19·340	14 40 56	− 1·348	14 45 37
	45 6	− 1·328	r
	47 40	+ 1·370	349·025
	48 48	+ 1·357	
			h m s
+ 19·340	14 50 20	+ 1·370	14 53 26
	51 51	+ 1·370	r
	53 57	− 1·211	349·146
	57 38	− 1·237	
			h m s
+ 19·324	15 3 15	− 1·476	15 7 43
	7 6	− 1·577	r
	9 17	+ 1·158	480·554
	11 16	+ 1·003	

At Beginning, Thermometer 39°·0. Barometer 772 mm.
„ End „ 39·5. „ 771 „
Chronometer Correction, − 28ˢ. Definition 2. Run + 2.

Digitized by Google

1888, November 14. Telescope W.

Star.	Chronometer.	Micrometer.	Means.
°	h m s		h m s
+ 19·324	7 3 58	+ 1·351	7 5 55
	5 9	+ 1·334	r
	6 43	— 1·356	458·991
	7 50	— 1·347	
			h m s
+ 19·340	7 13 0	— 0·858	7 15 22
	14 42	— 0·816	r
	15 53	+ 0·860	300·039
	17 53	+ 0·893	
			h m s
+ 19·340	7 18 57	+ 0·892	7 21 45
	20 37	+ 0·903	r
	22 28	— 0·768	360·133·
	24 59	— 0·762	
			h m
+ 19·324	7 27 49	— 1·562	7 29 38
	28 45	— 1·599	r
	30 30	+ 1·039	458·452·
	31 27	+ 1·027	
			h m s
+ 19·324	7 33 19	+ 1·027	7 35 19
	34 54	+ 1·004	r
	36 10	— 0·682	458·340·
	36 53	— 0·668	
			h m s
+ 19·340	7 39 46	— 0·630	7 41 20
	40 45	— 0·582	r
	41 54	+ 1·090	360·487·
	42 57	+ 1·097	
			h m s
+ 19·340	7 43 32	+ 1·100	7 45 13
	44 20	+ 1·073	r
	45 51	— 1·568	360·511
	47 10	— 1·582	
			h m s
+ 19·324	7 49 33	— 0·866	7 51 51
	51 21	— 0·881	r
	52 50	+ 0·768	457·890
	53 39	+ 0·760	

At Beginning, Thermometer 46°·5. Barometer 769·0 mm.
„ End „ 46·0. „ 768·5 „
Chronometer Correction, — 28ˢ. Definition 3-4. Run + 1.

1888, November 16. Telescope E.

Star.	Chronometer.	Micrometer.	Means.
°	h m s		h m s
+ 19·340	13 42 19	+ 1·416	13 45 7
	44 17	+ 1·423	r
	46 18	— 1·199	419·211
	47 36	— 1·218	
			h m
+ 19·324	13 51 55	— 0·804	13 54 2
	53 2	— 0·822	r
	54 51	+ 0·854	404·033
	56 21	+ 0·839	
			h m s
+ 19·322	13 58 3	+ 0·813	13 59 39
	59 2	+ 0·827	r
	14 0 11	— 0·869	403·951·
	1 22	— 0·868	
			h m s
+ 19·340	14 4 25	— 1·028	14 6 49
	5 31	— 1·038	r
	7 31	+ 0·696	419·671
	9 50	+ 0·713	
			h m s
+ 19·340	14 17 31	+ 0·780	14 19 30
	18 59	+ 0·778	
	20 24	— 0·848	419·945
	21 7	— 0·820	
			h m s
+ 19·324	14 26 19	— 1·043	14 29 8
	28 53	— 1·024	r
	30 10	+ 0·629	403·592
	31 9	+ 0·622	
			h m s
+ 19·324	14 32 22	+ 0·627	14 34 8
	33 26	+ 0·620	r
	34 49	— 1·077	403·553
	35 54	— 1·064	
			h m s
+ 19·340	14 39 24	— 0·654	14 41 43
	40 48	— 0·627	r
	42 44	+ 1·026	420·393
	43 51	+ 1·047	

At Beginning, Thermometer 32°·2. Barometer 762 mm.
„ End „ 30·2.
Chronometer Correction, — 20ˢ. Definition 2-3. Run — 8.

Digitized by Google

1888, November 17. Telescope W.

Star.	Chronometer.	Micrometer.	Means.
°	h m s		h m s
+ 19·340	6 47 21	+ 1·041	6 51 56
	50 1	+ 1·032	r
	54 11	— 1·568	440·477·
	56 12	— 1·550	
			h m s
+ 19·324	6 58 19	— 0·610	7 0 9
	59 7	— 0·613	r
	7 0 23	+ 0·967	396·361
	2 46	+ 0·976	
			h m s
+ 19·324	7 3 20	+ 1·034	7 4 54
	4 12	+ 0·984	r
	5 31	— 0·607	396·382·
	6 34	— 0·646	
			h m s
+ 19·340	7 8 38	— 1·392	7 12 59
	9 28	— 1·398	r
	16 24	+ 1·376	440·984·
	17 25	+ 1·386	
			h m s
+ 19·340	7 19 45	+ 1·440	7 21 20
	20 37	+ 1·461	r
	22 8	— 1·222	441·248·
	22 52	— 1·182	
			h m s
+ 19·324	7 25 42	— 0·772	7 27 19
	26 59	— 0·773	r
	27 55	+ 0·894	396·144
	28 42	+ 0·939	
			h m s
+ 19·324	7 29 26	+ 0·923	7 30 41
	30 0	+ 0·928	r
	31 8	— 0·756	396·166
	32 11	— 0·763	
			h m s
+ 19·340	7 35 1	— 1·070	7 36 34
	35 46	— 1·028	r
	37 17	+ 0·667	441·618
	38 14	+ 0·668	

At Beginning, Thermometer 33°·7. Barometer 771 mm.
„ End „ 31·2. „ 772 „
Chronometer Correction, — 20ˢ. Definition 2; windy. Run — 8.

1888, November 17. Telescope E.

Star.	Chronometer.	Micrometer.	Means.
°	h m s		h m s
+ 19·324	13 24 56	+ 0·679	13 26 57
	26 15	+ 0·687	r
	27 47	— 1·026	393·649
	28 49	— 1·042	
			h m s
+ 19·340	13 32 54	— 0·650	13 39 9
	33 46	— 0·661	r
	34 28	+ 1·041	450·380·
	35 28	+ 1·031	
			h m s
+ 19·340	13 37 3	+ 1·064	13 39 2
	37 58	+ 1·074	r
	39 59	— 0·586	450·492
	41 7	— 0·568	
			h m s
+ 19·324	13 44 19	— 1·077	13 46 31
	45 54	— 1·084	r
	47 31	+ 0·593	393·513
	43 22	+ 0·594	
			h m s
+ 19·324	13 51 19	+ 0·612	13 53 53
	52 56	+ 0·588	r
	54 58	— 1·081	393·521
	56 20	— 1·077	
			h m s
+ 19·340	13 59 15	— 1·376	14 1 34
	14 0 15	— 1·296	r
	2 55	+ 1·383	451·058·
	3 51	+ 1·407	
			h m s
+ 19·340	14 4 45	+ 1·370	14 7 0
	5 53	+ 1·421	r
	7 42	— 1·256	451·160
	9 39	— 1·214	
			h m s
+ 19·324	14 12 48	— 1·143	14 15 1
	14 12	— 1·173	r
	15 56	+ 1·499	393·343·
	17 7	+ 1·503	

At Beginning, Thermometer 24°·7. Barometer 775·0 mm.
„ End „ 24·2. „ 775·5 „
Chronometer Correction, — 20ˢ.
Definition 3-2; haze towards last. Run + 2.

Digitized by Google

1888, November 23. Telescope W.

Star.	Chronometer.	Micrometer.	Means.
°	h m s		h m s
+ 19·324	6 35 7	— 1·309	6 37 52
	36 35	— 1·280	r
	39 16	+ 1·440	469·151·
	40 29	+ 1·451	
			h m s
+ 16·247	6 45 6	+ 1·229	6 46 53
	45 56	+ 1·220	r
	47 33	— 1·440	526·784
	48 59	— 1·441	
			h m s
+ 16·247	6 49 50	— 1·478	6 51 35
	50 38	— 1·482	r
	52 24	+ 1·173	526·633
	53 30	+ 1·053	
			h m s
+ 19·324	6 56 37	+ 0·599	6 58 22
	57 35	+ 0·592	r
	59 10	— 1·063	469·547·
	7 0 7	— 1·033	

At Beginning, Thermometer 21°·2. Barometer 774·5 mm.
„ End „ 20·7.
Chronometer Correction, — 34ˢ. Definition 2-3.

1888, November 30. Telescope W.

Star.	Chronometer.	Micrometer.	Means.
	h m s		h m s
Standards.	22 14 16	— 0·801	22 22 39
	14 59	— 0·823	r
	16 7	7 7 0 48	514·003·
		1 31 4 56	
	20 6	7 22 0 40	
		1 46 4 54	
	23 19	1 36 0 57	h m s
		6 0 4 57	22 21 18
	25 41	1 25 0 43	° ′ ″
		5 44 4 50	225 58 45
	28 28	+ 0·792	
	32 52	+ 0·840	

1888, November 30. Telescope W.—*continued.*

Star.	Chronometer.	Micrometer.	Means.
°	h m s		h m s
+ 17·315	6 3 27	— 1·049	6 8 54
	4 17	— 1·100	r
	6 39	2 2	55·392
	7 51	2 2	h m s
	10 2	37 38	6 9 3
	11 41	40·5 41	° ′ ″
	13 16	+ 1·446	286 20 34
	14 38	+ 1·487	
			h m s
+ 17·315	6 17 59	+ 1·400	6 23 35
	19 21	+ 1·379	r
	21 14	40 40	55·038·
	22 45	42 42	
	24 53	7 7	h m s
	26 33	6·5 6·5	6 23 51
	27 48	— 1·368	° ′ ″
	29 14	— 1·334	106 23 52
			h m s
+ 17·315	6 30 45	— 1·362	6 37 33
	33 22	— 1·402	r
	36 1	4 4·5	54·758·
	37 25	7 7	h m s
	39 46	40 40·5	6 38 31
	40 54	46·5 47	° ′ ″
	42 35	+ 1·142	106 24 34
	43 30	+ 1·139	
			h m s
+ 17·315	7 1 36	+ 0·930	7 10 31
	2 55	+ 0·916	r
	10 26	49·5 50	54·004·
	11 36	49·5 50	h m s
	15 29	16·5 17	7 13 30
	16 31	13 13·5	° ′ ″
	17 54	— 0·937	285 32 22
	19 38	— 0·900	
			h m s
Standards.	0 7 44	— 0·693	0 16 6
	8 59	— 0·692	r
	10 46	6 19 1 20	514·237·
		0 22 4 22	
	13 20	7 2 1 49	
		0 39 4 29	
	16 35	0 56 2 8	
		4 10 4 33	h m s
	20 37	1 4 1 48	0 15 19
		4 38 4 34	° ′ ″
	23 16	+ 0·933	45 57 32
	24 28	+ 0·928	

At Beginning, Thermometer 36°·7. Barometer 753·5 mm.
„ End „ 35·2.
Chronometer Correction, — 45ˢ. Definition 2-3. Run + 1.

Digitized by Google

1888. December 1. Telescope W.

Star.	Chronometer.	Micrometer.	Means.
	h m s		h m s
Standards.	21 32 26	— 0·941	21 44 55
	41 26	— 0·868	r
	42 36	7 0 9 36	513·840
		2 25 4 38	
	44 46	6 46 9 38	
		2 4 4 43	
	47 37	0 0 9 36	h m s
		5 15 4 39	21 46 14
	49 58	0 5 9 33	° ′ ″
		5 27 4 38	226 59 0
	52 17	+ 0·752	
	53 14	+ 0·736	
°			h m s
+ 17·315	5 36 13	+ 1·040	5 40 20
	37 2	+ 0·997	r
	37 53	51 51	26·336
	39 7	45 45	h m s
	40 54	46 46	5 39 59
	42 3	42 42	° ′ ″
	43 38	— 1·687	123 16 0
	44 28	— 1·678	
			h m s
+ 17·315	5 46 21	— 1·732	5 51 44
	47 58	— 1·759	r
	49 50	7 7	26·094
	52 20	2 2	h m s
	53 29	4 4	5 52 39
	54 58	6 6	° ′ ″
	55 49	+ 0·840	123 34 45
	56 50	+ 0·839	
			h m s
+ 17·315	6 0 6	+ 0·793	6 4 22
	1 37	+ 0·797	r
	2 30	20 20	25·846
	3 38	20·5 21	h m s
	4 34	9 9·5	6 4 14
	6 15	4·5 5	° ′ ″
	7 21	— 0·950	123 43 30
	8 24	— 0·948	
			h m s
+ 17·315	6 9 17 }	— 0·929 }	6 12 51
	10 15 }	— 0·914 }	r
	11 25	26 26·5	25·709
	13 5	23 23	h m s
	14 23	43·5 44	6 13 31
	15 13	49 49·5	° ′ ″
	15 56	+ 0·621	124 5 22
	(16 55)	Not printed.	

1888, December 1. Telescope W.—*continued.*

Star.	Chronometer.	Micrometer.	Means.
	h m s		h m s
Standards.	23 20 1	+ 0·872	23 27 9
	20 56	+ 0·868	r
	21 51	0 46 1 19	514·144
		4 6 4 46	
	25 32	1 25 1 20	
		4 51 4 45	
	29 9	8 13 1 28	
		1 29 4 32	h m s
	31 17	8 2 1 33	23 26 57
		1 13 4 38	° ′ ″
	33 8	— 0·736	225 58 14
	34 33	— 0·717	

At Beginning, Thermometer 31°·0. Barometer 756 mm.
„ End „ 29·2.
Chronometer Correction. — 44ˢ.
Definition 2-3. Run 0.

1888, December 1. Telescope E.

Star.	Chronometer.	Micrometer.	Means.
°	h m s		h m s
+ 17·315	12 55 36	— 1·546	13 1 28
	58 38	— 1·569	r
	13 0 10	42 42	18·480
	1 41	51 51	h m s
	2 52	34 34	13 2 15
	4 10	27 27	° ′ ″
	5 25	+ 1·038	137 38 30
	6 15	+ 1·036	
			h m s
+ 17·315	13 7 25	+ 1·014	13 12 53
	8 30	+ 0·999	r
	9 56	2 2	18·272
	11 33	6 6	h m s
	14 34	28 28	13 13 0
	15 57	29·5 29·5	° ′ ″
	16 58	— 0·730	138 16 15
	18 39	— 0·738	
			h m s
Standards.	6 11 40	+ 0·919	6 19 27
	12 39	+ 0·930	r
	13 43	1 11 2 58	514·264
		2 52 4 13	
	16 36	0 6 2 42	
		1 49 4 13	
	19 39	5 58 2 43	
		7 47 4 18	h m s
	23 21	5 59 2 48	6 18 19
		7 45 4 21	° ′ ″
	26 6	— 0·663	225 55 39
	27 25	— 0·660	

Digitized by Google

1888, December 1. Telescope E.—*continued.*

Star.	Chronometer.	Micrometer.	Means.
°	h m s		h m s
+ 17·315	13 49 11	+ 0·683	13 55 58
	51 59	+ 0·701	r
	53 19	7·5 8	17·623·
	55 3	20 20·5	h m s
	56 35	36 36·5	13 55 46
	58 9	47 47	° ′ ″
	14 0 15	— 1·087	320 27 37
	2 28	— 1·050	
			h m s
+ 17·315	14 3 39	— 1·074	14 10 28
	6 44	— 1·087	r
	7 50	11·5 12	17·403
	10 4	22·5 23	h m s
	11 51	37·5 37·5	14 10 47
	13 25	10·5 11	° ′ ″
	15 5	+ 1·510	321 20 22
	16 25	+ 1·457	

At Beginning, Thermometer 24°·2. Barometer 758·0 mm.
„ End „ 23·7. „ 758·5 „
Chronometer Correction, — 44ˢ.
Definition 2. Run + 3.

1888, December 2. Telescope W.

Star.	Chronometer.	Micrometer.	Means.
	h m s		h m s
Standards.	22 6 59	— 0·794	22 13 1
	7 48	— 0·812	r
	9 6	9 29 : 47	514·009
		2 3 4 17	
	11 45	9 6 1 47	
		1 35 4 11	
	14 7	2 18 1 46	
		4 56 4 11	h m s
	15 56	1 59 1 42	22 12 43
		4 42 4 10	° ′ ″
	17 58	+ 0·829	226 59 3
	19 19	+ 0·795	
			h m s
+ 17·315	5 35 30	+ 0·772	5 39 38
	36 43	+ 0·790	r
	37 31	57 57	17·982
	38 44	47·5 47·5	h m s
	40 2	13 12·5	5 39 29
	41 38	17 16·5	° ′ ″
	42 37	— 0·798	209 3 22
	43 42	— 0·800	

1888, December 2. Telescope W.—*continued.*

Star.	Chronometer.	Micrometer.	Means.
°	h m s		h m s
+ 17·315	5 45 37	— 0·820	5 50 40
	46 25	— 0·820	r
	47 20	38·5 38·5	18·088·
	48 19	28·5 28·5	h m s
	51 41	39 39	5 50 18
	53 52	52 52	° ′ ″
	54 51	+ 0·917	209 39 15
	55 47	+ 0·900	
			h m s
+ 17·315	5 57 59	+ 0·932	6 2 1
	59 3	+ 0·929	r
	59 53	53·5 54	18·258·
	6 1 34	7 7	h m s
	3 8	50 51	6 2 8
	3 58	37·5 38	° ′ ″
	4 53	— 0·660	30 22 7
	6 9	— 0·684	
			h m s
+ 17·315	6 7 30	— 0·699	6 10 52
	8 24	— 0·678	r
	9 45	59 59·5	18·311·
	10 40	54 55	h m s
	11 32	56·5 57	6 11 5
	12 22	44 45	° ′ ″
	13 25	+ 0·999	30 51 7
	14 8	+ 1·001	
			h m s
Standards.	23 4 26	— 0·807	23 10 14
	5 30	— 0·731	r
	6 53	6 10 1 20	514·124·
		9 55 4 11	
	8 38	6 16 1 0	
		0 5 4 0	
	10 45	0 39 1 38	
		4 20 4 2	h m s
	12 44	1 36 1 30	22 9 45
		5 11 4 3	° ′ ″
	15 5	+ 0·907	45 57 49
	15 55	+ 0·880	

At Beginning, Thermometer 33°·2. Barometer 760·0 mm.
„ End „ 33·2. „ 759·5 „
Chronometer Correction, — 45ˢ. Definition 2-3. Run — 7.

Digitized by Google

1888, December 2. Telescope E.

Star.	Chronometer.	Micrometer.	Means.
°	h m s		h m s
+ 17·315	12 33 19	— 1·103	12 40 30
	34 35	— 1·086	r
	35 56	10 9·5	23·556
	37 31	20·5 20	h m s
	38 56	4·4 4·4	12 39 30
	45 37	1·5 2	° ′ ″
	46 30	+ 0·649	228 3 36
	47 36	+ 0·652	
			h m s
+ 17·315	12 49 25	+ 0·663	12 53 38
	50 34	+ 0·680	r
	51 54	11 11	23·771
	52 54	13 13	h m s
	54 7	50 49·5	12 53 43
	55 58	56 56	° ′ ″
	56 52	— 0·900	228 32 26
	57 42	— 0·899	
			h m s
Standards.	5 50 25	— 0·639	5 58 0
	51 40	— 0·704	r
	52 56	4 12 1 16	514·264
		7 40 4 33	
	55 38	5 37 1 19	
		9 8 4 37	
	58 35	9 4 1 16	
		2 41 4 41	h m s
	6 1 32	8 59 1 13	5 57 10
		2 34 4 36	° ′ ″
	4 6	+ 0·945	225 55 48
	5 52	+ 0·926	
°			h m s
+ 17·315	13 24 35	— 0·667	13 29 38
	26 8	— 0·639	r
	27 52	16·5 17	24·452
	29 5	9·5 10	h m s
	30 26	4 5	13 29 50
	31 56	9 10	° ′ ″
	33 13	+ 1·112	229 40 7
	34 37	+ 1·099	
			h m s
+ 17·315	13 35 54	+ 1·108	13 41 19
	37 4	+ 1·100	r
	38 4	20·5 21	24·587
	39 14	26 26·5	h m s
	42 10	43 44	13 40 42
	43 22	20·5 21	° ′ ″
	45 24	— 1·551	229 52 52
	46 54	— 1·482	

At Beginning. Thermometer 27°·2. Barometer 759 mm.
„ End „ 25°·7.
Chronometer Correction, — 45ˢ. Definition 2.

1888, December 4. Telescope W.

Star.	Chronometer.	Micrometer.	Means.
	h m s		h m s
Standards.	21 44 25	— 0·893	21 51 50
	45 16	— 0·862	r
	46 22	5 35 9 40	513·916
		1 15 4 18	
	50 2	5 36 9 22	
		1 37 4 20	h m s
	52 48	0 13 9 27	21 51 2
		6 10 4 20	° ′ ″
	54 57	9 30 9 27	45 58 46
		5 25 4 19	
	58 16	+ 0·796	
	59 25	+ 0·792	
°			h m s
+ 17·315	5 9 26	+ 1·533	5 15 11
	11 55	+ 1·533	r
	12 47	1 1·5	71·489
	14 34	0 0·5	h m s
	17 20	30 30·5	5 15 44
	18 15	33 34	° ′ ″
	19 10	— 1·059	68 46 19
	20 15	— 1·028	
			h m s
+ 17·315	5 21 23	— 1·989	7 26 44
	22 12	— 1·993	r
	23 54	37 37·5	71·766
	25 30	36 37	h m s
	28 56	1 2	5 27 8
	30 14	0·5 1	° ′ ″
	31 7	+ 0·746	68 49 0
	32 9	+ 0·769	
			h m s
+ 17·315	5 36 0	+ 0·832	5 41 47
	37 59	+ 0·812	r
	39 51	6 6·5	72·049
	41 12	2·5 2	h m s
	42 50	38 38	5 42 8
	44 40	38·5 38	° ′ ″
	45 42	— 0·778	68 51 11
	47 27	— 0·767	
			h m s
+ 17·315	5 48 34	— 0·769	5 53 1
	50 3	— 0·756	r
	51 17	40 40	72·230
	52 48	40·5 40·5	h m s
	54 20	5 6	5 53 27
	55 24	7 7	° ′ ″
	56 6	+ 0·980	68 53 15
	57 22	+ 1·006	

At Beginning, Thermometer 30°·7 Barometer 753 mm.
„ End „ 30°·2.
Chronometer Correction, — 47ˢ. Definition 2. Run + 3.

Digitized by Google

1888, December 12. Telescope W.

Star.	Chronometer.	Micrometer.	Means.
	h m s		h m s
Standards.	22 40 47	— 1·269	22 50 6
	41 49	— 1·271	r
	43 25	5 50 6 46	514·111
		4 16 4 10	
	47 26	6 11 6 22	
		5 0 4 19	
	52 30	2 51 7 9	
		1 4 4 3	h m s
	55 34	2 52 7 1	22 49 43
		0 57 4 8	° ′ ″
	58 15	+ 1·391	45 58 8
	59 35	+ 1·371	
°			h m s
+ 16·247	5 56 50	— 1·360	6 1 47
	58 10	— 1·327	r
	59 22	42 41·5	67·043
	6 1 20	43 43	h m s
	3 5	10 10	6 2 2
	4 20	13 13	° ′ ″
	5 28	+ 1·379	206 56 56
	6 41	+ 1·394	
			h m s
+ 16·247	6 8 26	+ 1·390	6 13 9
	9 16	+ 1·400	r
	11 55	12·5 12	67·250
	12 48	12·5 12	h m s
	14 15	49·5 49·5	6 13 40
	15 43	49 49	° ′ ″
	16 43	— 1·160	207 0 45
	18 12	— 1·129	
			h m s
+ 16·247	6 22 20	— 1·120	6 26 31
	23 15	— 1·097	r
	24 27	48 48·5	67·543
	25 55	46 46·5	h m s
	27 27	17 17·5	6 26 39
	28 47	17 17·5	° ′ ″
	29 39	+ 1·627	207 2 15
	30 51	+ 1·676	
			h m s
+ 16·247	6 31 39	+ 1·699	6 35 49
	33 13	+ 1·672	r
	34 21	20·5 21·5	67·783
	35 32	18·5 19	h m s
	36 51	50 51	6 36 13
	38 7	51 52	° ′ ″
	38 51	— 0·908	207 5 26
	39 34	— 0·897	

At Beginning, Thermometer 24°·2. Barometer 754·0 mm.
„ End „ 23°·2. „ 754·5 „
Chronometer Correction, — 57ˢ. Definition 2. Run + 9.

1888, December 12. Telescope E.

Star.	Chronometer.	Micrometer.	Means.
°	h m s		h m s
+ 16·247	12 0 56	— 1·407	12 7 13
	2 9	— 1·402	r
	4 51	50·5 50	74·951
	6 27	49·5 49	h m s
	9 21	16 15	12 7 48
	10 34	13 13	° ′ ″
	11 59	+ 1·342	208 2 0
	13 48	+ 1·369	
			h m s
+ 16·247	12 20 11	+ 1·474	12 26 41
	22 11	+ 1·490	r
	23 40	12·5 12·5	75·439
	25 44	17 17	h m s
	27 21	54 54	12 26 22
	30 2	52 52	° ′ ″
	31 16	— 1·062	208 3 52
	33 8	— 1·022	
			h m s
Standards.	6 23 39	— 1·223	6 35 51
	25 37	— 1·203	r
	29 48	1 4 7 3	514·236
		9 0 3 52	
	33 36	1 55 7 7	
		9 47 3 47	
	38 9	4 19 7 28	
		1 45 4 1	h m s
	42 10	4 10 7 32	6 35 55
		1 37 1 38	° ′ ″
	45 50	+ 1·441	45 56 7
	48 21	+ 1·458	

At Beginning, Thermometer, 21°·7. Barometer 754·5 mm.
„ End „
Chronometer Correction, — 57ˢ. Definition 2. Run + 1.

1888, December 13. Telescope W.

Star.	Chronometer.	Micrometer.	Means.
	h m s		h m s
Standards.	22 18 7	— 0·786	22 25 13
	19 6	— 0·780	r
	20 34	7 45 7 46	514·056
		5 2 3 50	
	23 30	7 26 7 42	
		4 47 4 8	
	26 12	3 27 7 29	
		0 55 3 57	h m s
	28 34	0 1 7 20	22 24 43
		0 41 3 58	° ′ ″
	30 58	+ 0·828	45 58 22
	32 42	+ 0·851	

Digitized by Google

1888, December 13. Telescope W.—*continued.*

Star.	Chronometer.	Micrometer.	Means.
°	h m s		h m s
+ 16·247	5 7 18	— 0·751	5 10 46
	8 0	— 0·781	r
	9 7	38 39	100·255
	10 12	37 37·5	h m s
	11 17	58 59	5 10 55
	12 44	1·5 2	° ′ ″
	13 29	+ 0·997	28 49 0
	14 14	+ 1·022	
			h m s
+ 16·247	5 17 36	+ 0·998	5 21 41
	18 42	+ 1·047	r
	19 45	58·5 58	100·510
	21 12	60 59·5	h m s
	22 34	41 41	5 21 52
	23 55	39·5 39	° ′ ″
	24 44	— 0·509	28 49 34
	25 41	— 0·516	
			h m s
+ 16·247	5 27 28	— 0·530	5 31 45
	28 22	— 0·512	r
	30 15	42 41·5	100·710
	31 10	42·5 42	h m s
	32 22	57 56	5 31 55
	33 52	58·5 58·5	° ′ ″
	34 45	+ 1·247	28 49 45
	36 25	+ 1·216	
			h m s
+ 16·247	5 38 9	+ 1·262	5 41 50
	38 50	+ 1·280	r
	39 40	59 60	100·960
	41 17	0·5 1	h m s
	42 26	41·5 42	5 41 41
	43 21	40 41	° ′ ″
	44 13	— 1·329	28 50 37
	46 6	— 1·293	

At Beginning, Thermometer, 18°·7. Barometer 754 mm.
„ End „ 17°·2.
Chronometer Correction, — 59ˢ. Definition 2. Run 0.

1888, December 13. Telescope E.

Star.	Chronometer.	Micrometer.	Means.
°	h m s		h m s
+ 16·247	11 48 49	+ 1·519	11 55 33
	50 14	+ 1·508	r
	52 31	13 14	109·500
	54 32	13 14	h m s
	56 49	1·5 2	11 55 52
	59 38	1·5 2	° ′ ″
	12 0 58	— 1·031	29 7 37
	2 11	— 0·996	
			h m s
+ 16·247	12 17 23	— 0·837	12 21 34
	18 30	— 0·801	r
	19 30	1·5 2	110·125
	20 54	3 4	h m s
	22 7	13 14	12 21 27
	23 19	12·5 13	° ′ ″
	24 35	+ 0·928	29 7 45
	25 49	+ 0·961	
			h m s
+ 16·247	12 27 48	+ 0·991	12 38 3
	29 19	+ 1·002	r
	30 29	18 17·5	110·506
	31 56	17·5 17	h m s
	33 40	3 3	12 32 45
	34 56	3 3	° ′ ″
	44 53	— 1·501	29 10 15
	50 13	— 1·479	
			h m s
+ 16·247	12 52 4	— 1·438	13 0 28
	53 21	— 1·410	r
	59 6	5 5	111·039
	13 1 42	6 6	h m s
	4 40	20·5 20	13 2 56
	6 18	20·5 20	° ′ ″
	7 17	+ 1·474	29 12 52
	9 12	+ 1·452	

At Beginning, Thermometer 12°·2. Barometer 753·5 mm.
„ End „ 11°·2.
Chronometer Correction, — 59ˢ. Definition 3-2; clouded up.

Digitized by Google

LEIPZIG

OBSERVATIONS OF IRIS

IN

1888.

Digitized by Google

LEIPZIG HELIOMETER OBSERVATIONS OF IRIS.

OBSERVER : DR. PETER.

Sidereal Time.	Instrumental Distance or Position Angle.	Approximate Reading of Position Circle or Scale.	Images. — Steadiness.	Sidereal Time.	Instrumental Distance or Position Angle.	Approximate Reading of Position Circle or Scale.	Images. — Steadiness.
		1888, September 27.					Ocular Scale, 10·10.
A.f.	Standard Stars.			A.f.	Standard Stars.		
h m	p	° ′		h m s	° ′ ″		
21 33 14	300·7135	44 58	I. 2	21 44 14	44 57 34		I. 2
35 59	·7305		S. 2	50 14	57 38	340–441	S. 2
39 11	298·9970			55 57	59 28		
41 21	·9695			22 0 12	59 22	40–740	
A.f.	Standard Stars.			A.f.	Standard Stars.		
	° ′ ″				p	° ′	
22 5 33	224 59 16		I. 2–3	22 22 21	299·0800	224 50	I. 2–3
8 47	59 21	40–740	S. 2–3	24 59	·0645		S. 3
15 28	57 3			28 4	300·8435		
18 40	57 13	340–441		31 13	·8570		
A.v.	Standard Stars.			A.v.	Standard Stars.		
	p	°			° ′ ″		
22 43 0	300·8825	225 0	I. 2–3	22 57 13	224 53 56		I. 3
48 36	·9105		S. 2–3	23 0 30	54 8	340–441	S. 3
51 26	299·1280			5 6	55 43		
54 45	·1420			8 11	55 35	40–740	
A.v.	Standard Stars.			A.v.	Standard Stars.		
	° ′ ″				p	° ′	
23 12 55	44 56 6		I. 2–3	23 28 48	299·1440	44 50	I. 2–3
15 51	56 8	40–741	S. 2–3	31 4	·1545		S. 2–3
21 4	53 16			36 24	300·9290		
25 19	53 26	340–441		39 11	·9245		
		1888, October 1.					Ocular Scale, 10·11.
A.f.	Standard Stars.			A.f.	Standard Stars.		
h m s	p	° ′		h m s	° ′ ″		
21 25 35	300·6850	45 2	I. 4-3	21 36 44	44 56 54		I. 3
28 49	·6805		S. 4-3	40 17	57 6	340–441	S. 3–4
31 19	298·9500			44 26	59 38		
34 15	·9530			50 58	59 25	40 740	

Digitized by Google

Sidereal Time.	Instrumental Distance or Position Angle.	Approximate Reading of Position Circle or Scale.	Images. — Steadiness.	Sidereal Time.	Instrumental Distance or Position Angle.	Approximate Reading of Position Circle or Scale.	Images. — Steadiness.
		1888, October 1—*continued.*				Ocular Scale 10·11.	
A.f.	Standard Stars.			A.f.	Standard Stars.		
h m s	° ′ ″			h m s	p	°	
21 55 1	224 59 21		I. 3	22 8 47	299·0575	225 0	I. 2–3
58 18	59 22	40–740	S. 3	11 58	·0490		S. 2–3
22 3 34	57 21			15 16	300·8225		
5 52	57 4	340–441		17 31	·8095		
A.v.	Standard Stars.			A.v.	Standard Stars.		
	p	° ′			° ′ ″		
22 29 23	300·8750	225 0	I. 2–3	22 39 11	224 54 6		I. 2–3
31 19	·8745		S. 2–3	42 31	53 50	340–441	S. 2–3
33 57	299·1095			47 6	55 37		
36 4	·1085			51 32	55 56	40–740	
A.v.	Standard Stars.			A.v.	Standard Stars.		
	° ′ ″				p	° ′	
22 59 9	44 56 6		I. 2–3	23 16 14	299·1080	45 0	I. 3
23 3 25	55 38	40–740	S. 2–3	18 16	·1235		S. 3
8 12	53 18			23 9	300·9155		
11 59	53 23	340–441		25 35	·9075		
		1888, October 4.				Ocular Scale, 10·05.	
A.v.	Standard Stars.			A.v.	Standard Stars.		
h m s	p	° ′		h m s	° ′ ″		
21 25 15	300·6815	225 0	I. 4	21 40 37	224 53 51		I. 3–2
33 4	·7020		S. 4	48 31	53 58	340–441	S. 3
36 45	298·9815			52 18	55 55		
39 38	299·0060			56 2	55 55	40–740	
A.v.	Standard Stars.			A.v.	Standard Stars.		
	° ′ ″				p	° ′	
22 3 9	44 56 28		I. 3–2	22 18 43	299·0670	45 0	I. 3–2
5 14	56 21	40–740	S. 3–2	22 29	·0435		S. 3–2
10 3	53 22			25 29	300·8585		
12 42	53 19	340–441		27 42	·8345		
A.f.	Standard Stars.			A.f.	Standard Stars.		
	p	° ′			° ′ ″		
22 39 48	300·8905	45 0	I. 3	22 55 17	44 57 27		I. 2–3
44 33	·9115		S. 3	58 42	57 28	340–441	S. 2–3
48 18	299·1520			23 3 28	59 10		
51 16	·1345			6 48	59 14	40–740	

Digitized by Google

Sidereal Time.	Instrumental Distance or Position Angle.	Approximate Reading of Position Circle or Scale.	Images. — Steadiness.
	1888, October 4—*continued.*		Ocular Scale, 10·05.
A.f.	Standard Stars.		
h m s	° ′ ″		
23 12 36	224 59 15	40–740	I. 2–3
16 32	59 34		S. 3
20 52	57 8	340–441	
23 43	56 54		
A.f.	Standard Stars.		
h m s	p	°	
23 28 26	299·1465	225 0	I. 2–3
31 6	·1395		S. 2–3
33 51	300·9300		
36 21	·9300		
	1888, October 18.		Ocular Scale, 10·00.
A.f.	Iris and D. M. + 24°·358.		
h m s	p	° ′	
20 53 19·2	236·0175	58 50	I. 3
55 57·7	·0550		S. 3
59 14·7	234·2724		
21 8 47·6	·3294		
A.f.	Iris and D. M. + 22°·372.		
h m s	p	° ′	
21 16 7·6	194·7466	51 50	I. 3
18 6·1	·8116		S. 3
26 31·1	196·6096		
41 5·6	·7226		
A.f.	Iris and D. M. + 22°·372.		
21 47 11·6	196·7106	231 48	I. 2
49 6·6	·7441		S. 2
51 18·6	195·0176		
54 28·6	·0176		
A.f.	Iris and D. M. + 24°·358.		
22 0 14·1	234·4139	239 13	I. 2–3
2 22·1	·4243		S. 2–3
6 6·5	236·1884		
9 4·5	·2059		
A v.	Iris and D. M. + 24°·358.		
22 20 6·5	236·1924	239 18	I. 2–3
22 16·5	·2134		S. 2–3
25 13·5	234·4498		
27 34·5	·4493		
A.v.	Iris and D. M. + 22°·372.		
22 32 47·0	195·2135	231 24	I. 2
35 47·5	·2330		S. 2
40 35·5	196·9925		
42 54·0	197·0160		
A.v.	Iris and D. M. + 22°·372.		
22 47 37·0	197·0195	51 21	I. 2–3
50 34·5	·0450		S. 2–3
55 13·5	195·2914		
57 7·5	·2894		
A.v.	Iris and D. M. + 24°·358.		
23 2·41·0	234·4498	59 30	I. 2–3
5 15·5	·4348		S. 2–3
8 31·4	236·1884		
11 56·9	·2149		

Bright moon in neighbourhood. The first half of the set was completed under very difficult conditions.

	1888, October 24.		Ocular Scale, 10·00.
A.v.	Iris and D. M. + 22°·354.		
h m s	° ′ ″		
20 51 4·1	283 3 17	180–595	I. 2
55 37·5	283 27 59		S. 3
59 35·5	282 51 11	195–581	
21 7 44·0	283 24 52		
A.v.	Iris and D. M. + 22°·354.		
h m s	p	° ′	
21 12 25·5	13·8945	283 20	I. 3
15 41·5	·9395		S. 3
26 34·9	15·8937		
28 36·9	·9112		

Digitized by Google

Sidereal Time.	Instrumental Distance or Position Angle.	Approximate Reading of Position Circle or Scale.	Images. — Steadiness.	Sidereal Time.	Instrumental Distance or Position Angle.	Approximate Reading of Position Circle or Scale.	Images. — Steadiness.
		1888, October 24—*continued.*				Ocular Scale, 10·00.	
A.v.	Standard Stars.			A.v.	Standard Stars.		
h m s	p	° ′		h m s	° ′ ″		
21 36 28	300·7437	225 0	I. 3	21 48 13	224 56 2	340-441	I. 3
38 15	·7527		S. 3	51 49	55 49		S. 3-4
43 10	299·0140			56 37	57 25	740-40	
45 48	298·9820			59 49	57 18		
A.v.	Iris and D. M. + 22°·354.			A.v.	Iris and D. M. + 22°·354.		
22 7 23·8	16·6568	287 46	I. 2-3	22 21 14·2	287 55 31	195-580	I. 2-3
9 42·8	·6728		S. 2-3	·26 36·2	288 17 35		S. 2-3
13 59·7	15·0324			29 58·2	289 9 48	180-597	
18 32·2	·0819			33 26·7	289 22 33		

The distance-pointings were inconvenient to make; the slow motion in position-angle worked too slowly at the small distance. The motion in position-angle by directly taking hold of the ring with one hand is inconvenient.

		1888, October 25.				Ocular Scale, 10·00.	
A.f.	Standard Stars.			A.f.	Iris and D. M. + 22°·347.		
h m s	° ′ ″			h m s	p	° ′	
20 40 18	45 0 34	40-740	I. 3-4	21 3 33·2	81·3944	306 50	I. 2-3
43 8	45 0 20		S. 3-4	7 17·1	82·9845		S. 2-3
49 0	44 58 41	340-441					
51 54	44 58 22						
A.f.	Iris and D. M. + 22°·347.			A.f.	Iris and D. M. + 22°·354.		
					° ′ ″		
21 9 53·1	307 10 56	147-630	I. 2-3	21 27 6·1	314 5 53	210-565	I. 3
13 48·1	8 9		S. 2-3	31 18·1	11 16		S. 3
18 9·1	2 31	230-549		35 47·5	24 25	164-613	
21 8·1	0 44			42·53·5	27 11		
A.f.	Iris and D. M. + 22°·354.			A.f.	Iris and D. M. + 22°·354.		
	p	°			p	°	
21 45 40·0	49·5891	314	I. 3	21 53 1·5	48·0686	133	I. 3
48 40·0	47·9540		S. 3	56 7·0	49·8989		S. 3
A.f.	Iris and D. M. + 22°·354.			A.f.	Iris and D. M. + 22°·347.		
	° ′ ″				° ′ ″		
21 58 16·0	134 33 26	160-610	I. 3	22 17 52·4	126 39 18	230-550	I. 3
22 1 42·0	34 47		S. 3	21 59·9	37 40		S. 3
5 11·0	23 33	210 561		25 27·9	43 52	150-631	
7 37·4	25 54			28 32·4	42 40		

Digitized by Google

Sidereal Time.	Instrumental Distance or Position Angle.	Approximate Reading of Position Circle or Scale.	Images. — Steadiness.
	1888, October 25—*continued.*		Ocular Scale, 10·00.
A.f.	Iris and D. M. + 22°·347.		
h m s	p	° ′	
22 30 54·9	81·0195	126 30	I. 3
33 24·9	79·1805		S. 3
A.f.	Standard Stars.		
22 56 0	° ′ ″ 45 0 38	40–740	I. 3
59 7	0 22		S. 3
23 2 39	44 59 5	340–440	
5 2	59 1		
A.f.	Standard Stars.		
h m s	° ′ ″		
22 43 12	224 58 27	340–440	I. 3
45 37	59 8		S. 3–4
50 12	225 0 40	40–740	
52 47	0 40		
	1888, October 26.		Ocular Scale, 10·00.
A.v.	Standard Stars.		
h m	p	° ′	
20 19 5	300·1610	225 0	I. 3
21 28	·1610		S. 3
24 29	298·4841		
27 46	·4941		
A.v.	Standard Stars.		
h m s	° ′ ″		
20 31 39	224 54 53	340–441	I. 3
35 19	54 41		S. 3
40 9	56 43	40–740	
41 37	56 48		
A.v.	Iris and D. M. + 22°·347.		
	° ′ ″		
20 49 59·3	293 49 56	165–615	I. 3
54 58·8	44 54		S. 3
21 1 26·7	29 33	210–562	
4 50·7	27 2		
A.v.	Iris and D. M. + 22°·347.		
	p	° ′	
21 12 11·2	47·8540	293 30	I. 4
15 10·2	·7620		S. 3–4
21 35·7	49·3730		
27 39·6	·2560		
A.v.	Iris and D. M. + 22°·347.		
	p	° ′	
21 34 51·1	49·0970	113 10	I. 3
37 43·1	·0300		S. 3
41 40·1	47·2496		
44 1·6	·2206		
A.v.	Iris and D. M + 22°·347.		
	° ′ ″		
21 47 54·5	112 43 12	210–563	I. 3
53 13·0	38 48		S. 2–3
59 10·0	35 13(*a*)		
22 3 5·5	33 15	160–608	
9 41·0	24 35		
A.v.	Standard Stars.		
	° ′ ″		
22 20 2	44 56 34	40–740	I. 3
23 50	56 31		S. 3
34 18	55 49	340 441	

B. D. + 22°·347 had to be observed in an almost dark field. The images of all the stars were always diffused and constantly disappearing.

Digitized by Google

Sidereal Time.	Instrumental Distance or Position Angle.	Approximate Reading of Position Circle or Scale.	Images. — Steadiness.
	1888, October 28.		Ocular Scale, 10·00.
A.f.	Iris and D. M. + 20°·404.		
h m s	p	° ′	
20 27 24·4	249·9520	57 50	I. 2–3
30 44·7	·9770		S. 2–3
33 50·7	251·7820		
35 47·7	·7225		
A.f.	Iris and D. M. + 22°·331.		
20 58 0·6	196·8966	205 0	I. 3
21 2 49·1	·8921		S. 2–3
6 12·6	198·6256		
8 13·1	·6276		
A.v.	Iris and D. M. + 20°·404.		
21 39 12·0	250·2845	237 20	I. 2–3
44 12·5	·3030		S. 2–3
46 42·0	252·0405		
49 2·0	·0705		
A.v.	Iris and D. M. + 22°·331.		
22 24 26·8	195·9600	25 31	I. 3
26 51·3	·9201		S. 2–3
30 39·2	197·6554		
36 35·2	·5904		
The illumination of the field of view was very faint throughout. The eye was very tired towards the end.			
	1888, November 5.		Ocular Scale, 9·92.
A.f.	Iris and D. M. + 21°·321.		
h m s	p	c ′	
20 23 6·2	41·2323	206 52	I. 3
25 21·2	·2183		S. 2–3
32 27·7	39·3905		
36 34·7	·3406		
A.f.	Standard Stars.		
	° ′ ″		
21 6 48	225 0 36	40–740	I. 2
11 10	0 50		S. 2–3
15 47	224 58 42	340–441	
20 43	58 50		

Sidereal Time.	Instrumental Distance or Position Angle.	Approximate Reading of Position Circle or Scale.	Images. — Steadiness.
A.f.	Iris and D. M. + 22°·331.		
h m s	p	° ′	
20 40 37·7	198·8339	24 50	I. 3
43 14·7	·8509		S. 2–3
49 35·7	197·0215		
52 34·2	196·9795		
A.f.	Iris and D. M. + 20°·404.		
21 20 29·0	252·0050	237 31	I. 3
23 20·5	251·9855		S. 2–3
27 37·0	250·2290		
29 56·6	·2495		
A.v.	Iris and D. M. + 22°·331.		
21 56 34·4	198·0854	205 18	I. 3–4
22 0 1·0	·0165		S. 3
5 10·4	196·2490(*a*)		
9 32·3	·1585(*b*)		
14 23·8	·0756(*b*)		
16 31·4	·0691(*a*)		
A.v.	Iris and D. M. + 20°·404.		
22 42 50·7	252·0909	56 59	I. 2–3
46 3·2	·0774		S. 2–3
50 43·7	250·3719		
23 1 40·2	·3614		
A.f.	Iris and D. M. + 21°·321.		
h m s	° ′ ″		
20 41 2·7	207 27 19	210–571	I. 2
47 18·2	43 8		S. 2–3
53 4·7	208 3 30	170–611	
57 51·2	13 41		
A.f.	Standard Stars.		
	p	° ′	
21 25 25	298·9096	225 0	I. 2
27 14	·9251		S. 2
33 3	300·7068		
36 38	·7158		

Digitized by Google

Sidereal Time.	Instrumental Distance or Position Angle.	Approximate Reading of Position Circle or Scale.	Images. — Steadiness.
	1888, November 5—*continued.*		Ocular Scale, 9·92.
A.f.	Iris and D. M. + 21°·321.		
h m s	p	° ′	
21 44 58·2	40·4966	209 51	I. 2
49 24·7	·4601		S. 2
51 59·7	38·6648		
54 10·2	·6453		
A.f.	Iris and D. M. + 21°·321.		
h m s	° ′ ″		
21 57 32·2	210 12 47		I. 2
22 1 41·2	21 42	209–711	S. 2
5 25·7	40 40		
10 42·2	52 24	170–610	

The illumination, notwithstanding the magnitude (8·0) of the comparison star could be left tolerably bright. During the first pointings a few small clouds were troublesome. Motion in position-angle stiff.

Sidereal Time.	Instrumental Distance or Position Angle.	Approximate Reading of Position Circle or Scale.	Images. — Steadiness.
	1888, November 7.		Ocular Scale, 9·89.
A.v.	Iris and D. M. + 19°·340.		
h m s	p	° ′	
20 36 40·6	262·6737	87 24	I. 3
38 37·1	·6523		S. 3–4
45 26·6	260·8322		
48 19·1	·8022		
A.v.	Iris and D. M. + 21°·304.		
h m s	p	° ′	
20 55 8·1	221·4991	57 20	I. 2–3
57 2·6	·5241		S. 3
21 1 2·1	223·2747		
4 11·6	·3146		
A.v.	Iris and D. M. + 21°·304.		
h m s	p	° ′	
21 11 7·6	223·3871	237 28	I. 2
14 31·1	·4105		S. 2
18 7·6	221·6679		
19 59·6	·6983		
A.v.	Iris and D. M. + 19°·340.		
h m s	p	° ′	
21 23 44·1	260·3727	267 7	I. 3
25 51·1	·3148		S. 3
30 51·6	261·9800		
37 58·1	·8565		

Thirty minutes before beginning observations it became suddenly clear; equally suddenly at the end it clouded again. The last pointings were difficult.

Sidereal Time.	Instrumental Distance or Position Angle.	Approximate Reading of Position Circle or Scale.	Images. — Steadiness.
	1888, November 8.		Ocular Scale, 9·90.
A.f.	Iris and D. M. + 21°·304.		
h m s	p	° ′	
20 29 42·7	230·8116	246 20	I 3
32 5·7	·8756		S. 2–3
36 48·7	232·6806		
38 23·7	·6861		
A.f.	Iris and D. M. + 19°·340.		
h m s	p	° ′	
20 43 36·7	240·0420	260 30	I. 3
46 31·2	·0170		S. 2–3
48 51·2	238·2470		
51 34·2	·2515		
A.f.	Iris and D. M. + 19°·340.		
h m s	p	° ′	
20 56 28·2	238·1680	80 20	I. 2–3
59 15·7	·1900		S. 2–3
21 2 49·2	239·8710		
6 5·2	·8435		
A.f.	Iris and D. M. + 21°·304.		
h m s	p	° ′	
21 10 9·2	233·1344	66 38	I. 2
12 8·7	·1454		S. 2
15 13·7	231·4498		
16 50·7	·4503		

Digitized by Google

Sidereal Time.	Instrumental Distance or Position Angle.	Approximate Reading of Position Circle or Scale.	Images. — Steadiness.
	1888, November 8—*continued.*		Ocular Scale, 9·90.
A.v.	Iris and D. M. + 21°·304.		
m s	p	c ′	
21 25 37·2	231·5773	66 39	I. 3
28 5·2	·6073		S. 2–3
35 48·2	233·3903		
37 40·2	·4212		
A.v.	Iris and D. M. + 19°·340.		
21 57 23·2	237·5158	259 58	I. 3
59 29·7	·5003		S. 3
22 7 31·7	239·1219		
10 35·2	·0994		
A.v.	Iris and D. M. + 19°·340.		
h m s	p	° ′	
21 44 55·2	239·3843	80 5	I. 2
46 50·7	·3748		S. 2
49 45·2	237·6177		
51 32·2	·5913		
A.v.	Iris and D. M. + 21°·304.		
22 15 35·2	233·8155	246 57	I. 3
20 57·2	·8720		S. 3
25 21·7	232·1765		
28 0·7	·2060		
The state of the air was extraordinarily changeable. At times the smoke from a factory was troublesome.			
	1888, November 9.		Ocular Scale, 9·92.
A.v.	Iris and D. M. + 19°·340.		
h m s	p	° ′	
20 34 24·8	221·4123	72 26	I. 3
39 14·8	·4418		S. 3
42 17·8	219·6606		
45 58·8	·6277		
A.v.	Iris and D. M. + 21°·304.		
20 53 2·3	246·5147	74 30	I. 2–3
55 46·3	·5442		S. 2–3
58 8·8	248·3009		
21 1 42·8	·3484		
A.v.	Iris and D. M. + 21°·304.		
21 6 41·8	248·4858	254 36	I. 2
9 3·8	·5048		S. 2
11 37·8	246·8171		
13 36·3	·8326		
A.v.	Iris and D. M. + 19°·340.		
21 18 31·8	219·4397	252 6	I. 3 2
20 35·8	·4267		S. 2–3
26 31·3	221·0950		
29 34·8	·0695		
A.f	Iris and D. M. + 19°·340.		
21 40 19·8	220·9950	252 4	I. 3
42 37·3	·9650		S. 3
47 16·3	219·1978		
52 16·8	·1434		
A f.	Iris and D. M. + 21°·304.		
21 57 30·8	247·4412	254 54	I. 2
59 20·8	·4792		S. 2
22 2 11·3	249·2294		
6 26·8	·2799		
A.f.	Iris and D. M. + 21°·304.		
h m s	p	′	
22 13 58·3	249·4103	75 0	I. 2
16 16·8	·4488		S. 2
18 59·3	247·7266		
20 42·3	·7646		
A.f.	Iris and D. M. + 19°·340.		
h m s	p	° ′	
22 24 9·3	218·8321	71 44	I. 2
26 19·8	·8286		S. 2
29 9·8	220·5373		
30 39·8	·5033		
Moonlight.			

Digitized by Google

Sidereal Time.	Instrumental Distance or Position Angle.	Approximate Reading of Position Circle or Scale.	Images. — Steadiness.
	1888, November 10.		Ocular Scale, 10·00.
A.f.	Iris and D. M. + 20°·341.		
h m s	p	° ′	
20 22 53·8	181·7571	196 49	I. 2-3
25 48·3	·7032		S. 2-3
29 20·3	183·4492		
31 25·3	·4302		
A.f.	Iris and D. M. + 19°·340.		
20 49 27·8	205·6917	63 12	I. 2
52 12·3	·7072		S. 2
56 1·3	207·4088		
57 33·3	·4048		
A.f.	Iris and D. M. + 20°·341.		
21 13 39·3	181·3199	17 10	I. 2-3
16 33·8	·2584		S. 2-3
19 33·3	183·0050		
22 39·3	182·9740		
	Moonlight.		
	1888, November 11.		Ocular Scale, 10·00.
A.v.	Iris and D. M. + 19°·340.		
h m s	p	° ′	
20 35 27·9	198·8407	53 20	I. 3
39 39·9	·8957		S. 3
43 16·9	197·1758		
45 3·4	·1808		
A.v.	Iris and D. M. + 20°·341.		
21 2 44·9	169·7407	208 0	I. 2
4 35·9	·7392		S. 2-3
6 58·4	167·9800		
9 59·9	·9530		
A.f.	Iris and D. M. + 19°·340.		
21 29 14·4	198·9297	233 1	I. 1-2
31 12·4	·9337		S. 2
35 35·9	197·1958		
38 45·9	·1748		

Sidereal Time.	Instrumental Distance or Position Angle.	Approximate Reading of Position Circle or Scale.	Images. — Steadiness.
A.f.	Iris and D. M. + 19°·340.		
h m s	p	° ′	
20 37 43·3	207·4642	243 20	I. 2
40 4·8	·4592		S. 2
42 33·8	205·7297		
44 43·8	·7107		
A.f.	Iris and D. M. + 20°·341.		
21 2 47·3	183·1799	17 10	I. 2-1
4 45·8	·1404		S. 2-1
6 28·8	181·3829		
8 18·3	·3809		
A.f.	Iris and D. M. + 19°·340.		
21 26 37·8	207·3173	63 0	I. 2
28 46·3	·3188		S. 2
31 47·8	205·5623		
33 13·3	·5313		
A.v.	Iris and D. M. + 20°·341.		
h m s	p	° ′	
20 50 24·9	168·0563	27 54	I. 2
53 43·9	167·9894		S. 2-3
56 46·9	169·7607		
58 28·9	·7542		
A.v.	Iris and D. M. + 19°·340.		
21 14 57·4	197·1928	233 1	I. 2-1
17 9·4	·1963		S. 2
20 52·4	198·9505		
22 54·9	·9610		
A.f.	Iris and D. M. + 20°·341.		
21 44 11·4	167·7606	208 22	I. 1-2
46 4·4	·7626		S. 2-1
48 1·4	169·4978		
50 33·9	·4878		

Digitized by Google

Sidereal Time.	Instrumental Distance or Position Angle.	Approximate Reading of Position Circle or Scale.	Images. — Steadiness.	Sidereal Time.	Instrumental Distance or Position Angle.	Approximate Reading of Position Circle or Scale.	Images. — Steadiness.
	1888, November 11—*continued.*					Ocular Scale, 10·00.	
A.f.	Iris and D. M. + 20°·341.			A.f.	Iris and D. M. + 19°·340.		
h m s	p	° ′		h m s	p	° ′	
21 53 53·4	169·4888	28 31	I. 1-2	22 5 50·9	197·1683	52 42	I. 2-1
55 57·9	·4798		S. 2-1	7 54·4	·1533		S. 2-1
58 26·9	167·6911			13 30·9	198·8992		
22 0 51·4	·6651			15 24·9	·9007		
	Moonlight. Everything observed in a well-illuminated field.						
	1888, November 12.					Ocular Scale, 10·00.	
A.f.	Iris and D. M. + 20°·341.			A.f.	Iris and D. M. + 19°·340.		
h m s	p	° ′		h m s	p	° ′	
20 28 12·8	162·1036	39 49	I. 3	20 41 49·3	196·1434	43 1	I. 3
30 30·3	·1146		S. 3	45 4·8	·1529		S. 4
34 48·3	163·8839			47 55·8	194·4419		
38 10·3	·8769			50 54·8	·4619		
A.f.	Iris and D. M. + 19°·340.			A.f.	Iris and D. M. + 20°·341.		
20 55 19·8	194·4788	222 52	I. 3	21 11 47·3	163·9700	220 15	I. 2-3
58 4·3	·5308		S. 3-4	15 1·3	·9845		S. 3-4
21 2 37·8	196·2818			20 39·8	162·2270		
6 40·8	·2723			25 1·8	·2390		
A.v.	Iris and D. M. + 20°·341.			A.v.	Iris and D. M. + 19°·340.		
21 36 35·3	162·2610	220 19	I. 3	21 52 53·3	196·4622	222 37	I. 2-3
40 41·3	·2370		S. 3-4	55 41·8	·4497		S. 3
44 30·8	163·9955			58 41·8	194·7277		
46 12·3	·9950			22 1 11·3	·7217		
A.v.	Iris and D. M. + 19°·340.			A.v.	Iris and D. M. + 20°·341.		
22 6 50·8	194·7502	42 20	I. 2-3	22 21 18·8	163·9915	40 48	I. 2
9 2·8	·7656		S. 2-3	23 8·3	·9620		S. 2
13 42·8	196·5042			25 52·8	162·2240		
15 45·3	·5162			27 42·3	·2120		
	Moonlight. In the beginning everything was covered with thin cloud; at the end it was quite clear.						
	1888, November 13.					Ocular Scale, 10·00.	
A.v.	Iris and D. M. + 19°·340.			A.v.	Iris and D. M. + 20°·341.		
h m s	p	° ′		h m s	p	° ′	
20 48 41·7	197·3817	32 45	I. 4	21 2 35·2	166·2481	52 10	I. 4
50 27·2	·4162		S. 4	6 2·7	·2791		S. 4
53 48·7	199·2131			11 47·7	164·5693		
57 48·7	·2246			16 28·2	·5338		

Digitized by Google

Sidereal Time.	Instrumental Distance or Position Angle.	Approximate Reading of Position Circle or Scale.	Images. Steadiness.
	1888, November 14.		Ocular Scale, 10·00.
A.v.	Iris and D. M. + 18°·283.		
h m s	p	° ′	
20 39 12·7	134·9930	79 35	I. 3–4
44 37·2	·9660		S. 3
49 31·7	136·6037		
51 37·7	·5642		
A.v.	Iris and D. M. + 20°·341.		
21 11 58·2	174·2169	243 11	I. 2–3
14 1·2	·2159		S. 2–3
19 28·2	175·9885		
21 12·2	176·0050		
A.f.	Iris and D. M. + 18°·283.		
21 41 2·7	134·2699	259 7	I. 2
43 16·7	·2294		S. 2–3
47 37·7	135·8815		
49 11·7	·8785		
A.f.	Iris and D. M. + 20°·341.		
22 5 50·7	174·7151	63 39	I. 1–2
7 49·7	·7426		S. 2
10 47·2	176·5217		
12 17·7	·5412		
A.v.	Iris and D. M. + 20°·341.		
20 55 10·7	175·6831	63 7	I. 3–2
57 24·7	·7241		S. 3–2
21 1 30·7	174·0635		
4 31·2	·1035		
A.v.	Iris and D. M. + 18°·283.		
21 27 2·7	136·1699	259 15	I. 2–3
28 39·7	·1369		S. 2–3
31 31·7	134·4073		
33 20·2	·3758		
A.f.	Iris and D. M. + 20°·341.		
21 52 35·2	176·3308	243 32	I. 1–2
54 51·2	·3398		S. 2–3
57 32·7	174·6237		
22 0 56·7	·6877		
A.f.	Iris and D. M. + 18°·283.		
22 17 53·7	135·4967	79 53	I. 2
21 14·2	·4423		S. 2
26 36·7	133·6992 (*a*)		
30 27·2	·6107 (*b*)		
32 29·7	·6002 (*b*)		
35 10·2	·5787 (*a*)		
Moonlight. The sky became lightly covered, and the images in consequence became very much steadier and sharper.			
	1888, November 15.		Ocular Scale, 10·00.
A.f.	Iris and D. M. + 20°·341.		
h m s	p	° ′	
20 42 1·0	190·8846	252 27	I. 3–4
44 55·5	·9956		S. 3–4
51 39·5	189·3648		
54 21·5	·3813		
A.f.	Iris and D. M. + 18°·283.		
21 17 14·0	118·3099	66 34	I. 2
20 36·5	·2909		S. 3
23 19·5	116·5172		
25 32·0	·5052		
A.f.	Iris and D. M. + 18°·283.		
21 2 1·0	116·6946	246 39	I. 3
6 16·5	·6791		S. 3
10 14·5	118·3414		
12 39·0	·3179		
A.f.	Iris and D. M. + 20°·341.		
21 28 55·5	189·8955	72 35	I. 2–1
31 13·0	·9070		S. 2–1
33 11·5	191·6442		
35 2·5	·7092		

Digitized by Google

Sidereal Time.	Instrumental Distance or Position Angle.	Approximate Reading of Position Circle or Scale.	Images. — Steadiness.
1888, November 15—*continued.*			**Ocular Scale, 10·00.**
A.v.	Iris and D. M. + 20°·341.		
h m s	p	° ′	
21 43 34·5	191·7877	72 40	I. 2
45 51·5	·8327		S. 2–3
49 30·5	190·1449		
51 16·5	·1823		
A.v.	Iris and D. M. + 18°·283.		
22 5 28·0	117·9011	240 0	I. 2
7 35·5	·9086		S. 2
9 41·5	116·1129		
11 29·0	·1089		
A.v.	Iris and D. M. + 18°·283.		
h m s	p	° ′	
21 54 58·5	116·2713	66 10	I. 2
57 23·5	·2203		S. 2
59 45·0	117·9231		
22 2 1·5	·9441		
A.v.	Iris and D. M. + 20°·341.		
22 15 35·0	190·4902	252 46	I. 2–1
17 17·0	·5247		S. 2–1
19 1·5	192·2644		
22 9·0	·3029		
Moonlight.			
1888, November 17.			**Ocular Scale, 10·00.**
A.v.	Iris and D. M. + 18°·283.		
h m s	p	° ′	
20 52 19·5	103·0447	34 0	I. 3
55 33·0	·1096		S. 3–4
21 0 11·0	104·8584		
3 28·5	·8574		
A.v.	Iris and D. M. + 19°·329.		
h m s	p	° ′	
21 7 15·5	98·7296	37 40	I. 4
9 50·5	·7151		S. 3–4
13 4·5	96·9715		
16 53·5	·9995		
A.v.	Iris and D. M. + 19°·329.		
21 22 18·0	96·9735	217 40	I. 3
24 52·5	97·0180		S. 3
34 28·0	98·7386		
37 26·5	·8100		
A.v.	Iris and D. M. + 18°·283.		
21 50 59·0	105·0404	213 15	I. 3
54 36·5	·0489		S. 3
22 0 9·5	103·3039		
1 29·0	·2814		
A.f.	Iris and D. M. + 18°·283.		
22 7 57·5	103·3029	213 8	I. 3
10 1·5	·3243		S. 3–4
11 42·0	105·0944		
13 47·0	·1048		
A.f.	Iris and D. M. + 19°·329.		
22 18 19·5	98·7660	218 37	I. 3–4
20 35·0	·7905		S. 3–4
22 14·5	97·0307		
24 50·5	·0082		
Moon near. The observations, with axis preceding, were only secured through gaps in the clouds. The state of the air throughout was very unsatisfactory. The companion to B. D. + 19°·329 was generally invisible.			
1888, November 18.			**Ocular Scale, 10·00.**
A.f.	Iris and D. M. + 18°·277.		
h m s	° ′ ″		
20 45 20·3	111 24 47	160–620	I. 2
49 4·3	21 2		S. 2–3
52 37·3	12 46	218–559	
55 50·3	10 14		
A.f.	Iris and D. M. + 18°·277.		
h m s	p	° ′	
20 59 37·8	58·2606	111 8	I. 2–3
21 1 38·8	·2061		S. 2–3
4 47·3	59·9218		
6 27·8	·8728		

Digitized by Google

Sidereal Time.	Instrumental Distance or Position Angle.	Approximate Reading of Position Circle or Scale.	Images. — Steadiness.	Sidereal Time.	Instrumental Distance or Position Angle.	Approximate Reading of Position Circle or Scale.	Images. — Steadiness.
	1888, November 18—*continued.*					Ocular Scale, 10·00.	
A.f.	Standard Stars.			A.f.	Standard Stars.		
h m s	p	° ′		h m s	° ′ ″		
21 11 18	300·6395	44 58	I. 2-3	21 23 55	44 58 44		I. 3-2
14 16	·6675		S. 3	27 52	58 58	340–441	S. 3
17 37	298·8886			32 1	45 0 36		
19 39	·8931			34 23	0 38	40–741	
A.f.	Iris and D. M. + 18°·277.			A.f.	Iris and D. M. + 18°·277.		
21 41 44·1	59·1584	110 56	I. 3	21 53 38·6	110 51 11		I. 3
44 16·6	·1044		S. 2-3	57 45·5	50 13	218–561	S, 3
46 29·1	57·3305			22 3 49·5	55 37		
49 32·1	·2646			9 40·0	53 16	160–618	
Moonlight and thin cloud. It gradually clouded up completely, so that at last no stars were visible to the naked eye, and the objects in the telescope could only be seen with most extreme effort.							
	1888, November 29.					Ocular Scale 10·00.	
A.v.	Iris and D. M. + 17°·315.			A.v.	Iris and D. M. + 17°·315.		
h m s	° ′ ″			h m s	p	° ′	
21 17 26·4	281 20 9		I. 3	21 35 52·8	56·0030	281 5	I. 3-4
22 19·4	20 54	160–618	S. 3	37 57·8	·0310		S. 3-4
26 18·4	19 47			40 50·3	57·7256		
30 36·9	18 49	215–559		44 2·8	·6482		
A.v.	Standard Stars.			A.v.	Standard Stars.		
	p	° ′			° ′ ″		
21 52 42	300·7521	224 54	I. 3-4	22 4 39	224 55 19		I. 3
55 48	·8040		S. 3-4	8 54	55 15	340-441	S. 3
59 28	299·0375			12 12	57 11		
22 1 27	·0395			15 15	57 12	40–741	
A.v.	Iris and D. M. + 17°·315.			A.v.	Iris and D. M. + 17°·315.		
22 21 46·7	57·1523	281 19	I. 2	22 34 30·1	281 15 20		I. 2-3
25 42·2	·0779		S. 2-3	37 50·1	16 11	217–562	S. 2-3
29 13·6	55·3003			40 59·1	20 0		
31 57·6	·2654			44 45·1	21 48	160-617	
	1888, December 3.					Ocular Scale, 10·00.	
A.f.	Iris and D. M. + 17°·315.			A.f.	Iris and D. M. + 17°·315.		
h m s	° ′ ″			h m s	p	° ′	
21 42 41·1	58 7 25		I. 2-3	21 57 53·6	21·8670	58 30	I. 2-3
46 27·6	13 3	200–580	S. 2-3	22 0 38·0	·9105		S. 2-3
50 29·5	34 47			5 25·4	20·1884		
54 53·0	32 55	178–600		13 8·8	·2618		

Digitized by Google

Sidereal Time.	Instrumental Distance or Position Angle.	Approximate Reading of Position Circle or Scale.	Images. — Steadiness.
	1888, December 3—*continued.*		Ocular Scale, 10·00.
A.f.	Standard Stars.		
h m s	p.	° ′	
22 19 34	299·0815	45 0	I. 2–3
23 13	·0775		S. 3
26 46	300·8815		
29 19	·8970		
A.f.	Iris and D. M. + 17°·315.		
22 49 32·4	20·6754	58 30	I. 2–3
53 19·4	·7213		S. 2–3
55 49·9	22·5090		
57 28·4	·5065		
A.f.	Standard Stars.		
h m s	° ′ ″		
22 31 28	45 0 30		I. 2·3
35 12	0 35	40–741	S. 2·3
38 41	44 58 53		
41 56	59 18	340–441	
A.f.	Iris and D. M. + 17°·315.		
23 0 1·3	59 23 5	178–600	I. 2–3
3 41·3	31 49		S. 2–3
7 37·3	11 37	200–579	
10 38·3	13 44		
	1888, December 5.		Ocular Scale, 10·00.
A.v.	Iris and D. M. + 17°·315.		
h m s	p	° ′	
21 27 27·2	54·9765	68 40	I. 2
29 23·7	55·0060		S. 2
31 23·7	53·2971		
34 4·7	·3201		
A.v.	Iris and D. M. + 17°·315.		
h m s	° ′ ″		
21 36 59·2	68 40 40	218–565	I. 2–1
40 46·7	41 53		S. 2
45 30·2	46 1	163–618	
48 57·7	45 5		
A.v.	Standard Stars.		
	° ′ ″		
21 54 55	44 56 58	40–740	I. 2–1
58 10	57 15		S. 2–1
22 1 14	55 25	340–441	
4 19	55 15		
A.v.	Standard Stars.		
	p	° ′	
22 8 11	299·0435	44 53	I. 2–1
10 52	·0190		S. 2
14 6	300·8108		
19 0	·8342		
A.v.	Iris and D. M. + 17°·315.		
22 24 27·7	68 47 7	162–618	I. 2.
28 46·2	49 59		S. 2.
33 42·7	43 17	217–563	
37 51·7	43 33		
A.v.	Iris and D. M. + 17°·315.		
22 41 42·7	54·1208	68 41	I. 2–1
43 26·2	·1308		S. 2–1
48 46·2	55·9476		
53 18·2	·9851		
	1888, December 6.		Ocular Scale, 10·02.
A.f.	Iris and D. M. + 17°·315.		
h m s	p	° ′	
21 29 21·9	71·8061	248 24	I. 1
31 11·4	·8251		S. 1
33 22·4	70·1115		
35 13·9	·1289		
A.f.	Iris and D. M. + 16°·247.		
h m s	p	° ′	
21 38 46·9	75·1839	238 22	I. 1
40 27·4	·1809		S. 1
42 29·9	76·8895		
44 32·2	·8756		

Digitized by Google

Sidereal Time.	Instrumental Distance or Position Angle.	Approximate Reading of Position Circle or Scale.	Images. — Steadiness.
	1888. December 6—*continued.*		Ocular Scale, 10·02.
A.f.	Iris and D. M. + 16°·247.		
h m s	p	° ′	
21 47 40·9	76·8461	58 26	I. 1
49 42·4	·8306		S. 1
52 9·4	75·0485		
54 21·9	·0145		
A.v.	Iris and D. M. + 17°·315.		
22 13 1·4	72·3261	68 20	I. 1
15 18·4	·3456		S. 1
18 7·4	70·6509		
20 34·9	·6749		
A.v.	Iris and D. M. + 16°·247.		
22 39 4·9	76·3097	338 14	I. 2
42 8·9	·2572		S. 2
45 24·9	74·4985		
47 49·4	·4646		

Images during the first part extremely sharp and steady. A rising ground-mist dimmed the images gradually, but to such an extent that finally the stars could only be seen with most extreme effort.

Sidereal Time.	Instrumental Distance or Position Angle.	Approximate Reading of Position Circle or Scale.	Images. — Steadiness.
	1888. December 6—*continued.*		Ocular Scale, 10·02.
A.f.	Iris and D. M. + 17°·315.		
h m s	p	° ′	
21 58 45·9	70·4316	68 22	I. 1
22 0 41·4	·4561		S. 1
3 7·9	72·1943		
5 11·4	·2203		
A.v.	Iris and D. M. + 16°·247.		
22 26 0·4	74·6923	58 12	I. 2–1
30 11·4	·6494		S. 2–1
32 26·9	76·3686		
34 21·4	·3591		
A.v.	Iris and D. M. + 17°·315.		
22 53 26·9	71·0650	248 10	I. 2–3
59 14·9	·1364		S. 2
23 4 35·9	72·9010		
7 14·4	·9335		

Sidereal Time.	Instrumental Distance or Position Angle.	Approximate Reading of Position Circle or Scale.	Images. — Steadiness.
	1888. December 7.		Ocular Scale, 10·00.
A.v.	Iris and D. M. + 16°·247.		
h m s	p	° ′	
21 33 13·1	58·4324	237 26	I. 2–3
36 22·1	·4044		S. 2–3
39 8·6	60·1299		
41 49·1	·1204		
A.v.	Iris and D. M. + 17°·315.		
21 56 17·6	87·1346	66 56	I. 2
59 25·1	·1466		S. 2
22 1 54·6	88·9104		
5 3·1	·9608 (*a*)		
7 30·6	·9973 (*a*)		
A.f.	Iris and D. M. + 16°·247.		
22 26 17·6	57·8821	57 27	I. 2–3
28 35·1	·8426		S. 3
33 22·6	59·5436		
40 34·1	·4752		

Sidereal Time.	Instrumental Distance or Position Angle.	Approximate Reading of Position Circle or Scale.	Images. — Steadiness.
A.v.	Iris and D. M. + 17°·315.		
h m s	p	° ′	
21 46 3·6	88·7525	247 2	I. 2
48 26·6	·7805		S. 2
51 9·6	87·0756		
52 55·6	·0846		
A.v.	Iris and D. M. + 16°·247.		
22 12 14·6	59·7949	57 37	I. 2
14 9·6	·7640		S. 2
16 31·1	57·9764		
20 23·1	·9594		
A.f.	Iris and D. M. + 17°·315.		
22 45 8·6	89·4212	67 0	I. 2–3
47 59·6	·4582		S. 2 3
50 0·1	87·7412		
55 2·1	·8176		

Measures were discontinued, as the pointings could only be made with the greatest effort.

Digitized by Google

Sidereal Time.	Instrumental Distance or Position Angle.	Approximate Reading of Position Circle or Scale.	Images. — Steadiness.	Sidereal Time.	Instrumental Distance or Position Angle.	Approximate Reading of Position Circle or Scale.	Images. — Steadiness.
		1888, December 8.				Ocular Scale, 10·02.	
A.f.	Standard Stars.			A.f.	Standard Stars.		
h m s	p	° ′		h m s	° ′ ″		
21 15 51	300·5995	44 59	I. 3–4	21 25 24	44 58 23		I. 3
17 45	·6345		S. 3–4	28 19	58 30	340–441	S. 3–4
20 31	289·8911			31 4	45 0 47		
22 26	·8711			33 33	0 58	40–741	
A.f.	Iris and D. M. + 16°·247.			A.f.	Iris and D. M. + 16°·247.		
	° ′ ″				p	° ′	
21 42 16·3	58 13 41		I. 2–3	21 56 5·3	41·1972	58 3	I. 2–3
45 59·8	14 49	170–613	S. 2–3	58 28·8	·1912		S. 2–3
49 16·3	5 48			22 0 48·8	42·9022		
52 39·8	6 2	210–569		2 44·8	·8658		
A.f.	Iris and D. M. + 16°·247.			A.f.	Iris and D. M. + 16°·247.		
	p	° ′			° ′ ″		
22 8 2·3	42·8243	238 10	I. 2–1	22 15 41·3	238 5 48		I. 2
10 7·3	·8018		S. 2	18 59·3	7 17	210–569	S. 2
12 10·8	41·0040			22 50·8	16 19		
14 1·8	·0170			25 57·8	17 55	170–613	
A.f.	Standard Stars.			A.f.	Standard Stars.		
	° ′ ″				p	° ′	
22 32 11	225 0 18		I. 2	22 44 15	299·0700	224 56	I. 2
35 4	0 36	40–740	S. 2–3	46 51	·0660		S. 3
38 17	224 58 56			49 47	300·8663		
40 36	58 50	340–441		51 14	·8933		
		1888, December 10.				Ocular Scale, 10·02.	
A.v.	Standard Stars.						
h m s	° ′ ″						
21 17 56	224 57 13		I. 2–3				
20 33	57 11	40–740	S. 3				
25 33	54 59						
28 48	55 25	340–441					
		1888, December 11.				Ocular Scale, 10·02.	
A.v.	Standard Stars.			A.v.	Standard Stars.		
h m s	° ′ ″			h m s	p	° ′	
21 18 42	224 57 2		I. 2–3	21 30 56	298·9521	224 52	I. 2
21 5	57 6	40–740	S. 2–3	32 11	·9546		S. 2
24 39	55 2			34 11	300·7133		
28 25	55 5	340–441		35 58	·7034		

Digitized by Google

Sidereal Time.	Instrumental Distance or Position Angle.	Approximate Reading of Position Circle or Scale.	Images. — Steadiness.	Sidereal Time.	Instrumental Distance or Position Angle.	Approximate Reading of Position Circle or Scale.	Images. — Steadiness.
		1888, December 13.				Ocular Scale, 9·96.	
A.v.	Standard Stars.			A.v.	Standard Stars.		
h m s	° ′ ″			h m s	p	° ′	
21 27 5	224 56 52	40–740	I. 2-1 S. 2–1	21 39 26	289·9326	224 52	I. 2–1 S. 2
29 21	57 2			43 2	·9626		
33 28	55 25	340–441		45 13	300·7135		
35 52	55 20			47 39	·7260		
A.v.	Iris and D. M. + 16°·247.			A.v.	Iris and D. M. + 16°·247.		
	p	° ′			° ′ ″		
21 57 34·3	53·9202	207 54	I. 2 S. 2	22 7 19·8	207 34 15	216–564	I. 2 S. 2
22 0 57·8	·9741			10 26·8	34 20		
3 30·8	52·2750			13 47·8	42 16	160–614	
5 13·3	·2925			17 21·3	42 19		
A.v.	Iris and D. M. + 16°·247.			A.v.	Iris and D. M. + 16°·247.		
	° ′ ″				p	° ′	
22 23 4·3	27 42 34	160–614	I. 2 S. 2	22 38 24·3	52·7244	27 32	I. 2 S. 2
26 18·3	42 25			40 19·8	·7404		
30 39·3	34 6	220–567		41 57·8	54·5552		
34 13·8	34 30			44 25·3	·5828		
A.v.	Standard Stars.			A.v.	Standard Stars.		
	p	° ′			° ′ ″		
22 50 46	300·8583	45 0	I. 2–1 S. 2	22 59 35	44 55 14	340–441	I. 2 S. 2
53 20	·8937			23 3 21	54 59		
55 39	299·1053			7 35	57 13	40–740	
57 12	·0963			15 59	57 12		
		Moonlight.					

Digitized by Google

OBSERVATIONS OF THERMOMETERS AND BAROMETER—LEIPZIG.

Date 1888.	Thermometer Readings (Centigrade). Sidereal time.	T_o	T_L	Barometer. Sidereal time.	Barometer at 0° C.
	h m	°	°	h m	mm
Sept. 27	21 19	+ 10·1	+ 8·9	20 28	755·6
	22 3	...	+ 7·6	22 28	755·3
	22 34	+ 8·0	+ 6·5	0 29	755·2
	23 12	...	+ 5·9	...	...
	23 41	+ 6·9	+ 5·9	...	...
October 1	21 14	+ 7·2	+ 6·4	20 44	743·9
	21 53	...	+ 5·6	22 44	743·9
	22 8	...	+ 5·4	0 44	743·7
	22 22	+ 6·0	+ 5·3	...	...
	22 38	...	+ 5·2	...	...
	22 55	...	+ 5·1	...	...
	23 4	...	+ 5·0	...	...
	23 28	+ 5·4	+ 4·9	...	...
October 4	21 21	+ 9·5	+ 8·2	20 56	743·3
	21 41	...	+ 8·1	22 56	743·2
	21 58	...	+ 8·1	0 56	743·0
	22 15	...	+ 8·1	...	...
	22 29	+ 8·7	+ 8·0	...	...
	22 53	...	+ 8·0	...	...
	23 9	...	+ 8·0	...	...
	23 26	...	+ 8·1	...	...
	23 38	+ 8·2	+ 8·4	...	...
October 18	20 35	+ 5·9	+ 5·2	19 51	760·1
	21 10	...	+ 4·4	21 51	760·5
	21 42	...	+ 4·6	23 51	760·5
	21 56	...	+ 4·3	...	...
	22 13	+ 4·0	+ 3·9	...	...
	22 29	...	+ 3·1	...	...
	22 44	...	+ 3·1	...	...
	22 59	...	+ 3·1	...	...
	23 14	+ 3·4	+ 3·0	...	...
October 24	20 47	+ 8·5	+ 7·0	20 14	756·4
	21 30	...	+ 6·9	22 14	756·4
	22 2	...	+ 6·1	0 15	756·4
	22 53	+ 6·3	+ 6·1	...	...

Date 1888.	Thermometer Readings (Centigrade). Sidereal time.	T_o	T_L	Barometer. Sidereal time.	Barometer at 0° C.
	h m	°	°	h m	mm
October 25	20 33	+ 10·2	+ 8·9	20 18	757·4
	21 0	...	+ 9·0	22 18	757·5
	21 25	...	+ 8·3	0 19	758·1
	21 51	...	+ 7·5	...	...
	22 9	...	+ 7·7	...	...
	22 35	...	+ 7·4	...	...
	23 7	+ 7·8	+ 7·5	...	...
October 26	20 16	+ 13·7	+ 13·1	20 22	760·4
	20 43	...	+ 12·9	22 22	761·1
	21 30	...	+ 12·0	0 23	761·3
	22 14	...	+ 9·9	...	...
	22 44	+ 10·9	+ 10·1	...	...
October 28	20 23	+ 16·0	+ 15·2	20 30	762·3
	20 39	...	+ 15·0	22 30	762·1
	20 54	...	+ 14·6	0 31	761·6
	21 9	...	+ 14·0	...	...
	21 32	+ 14·6	+ 14·2	...	...
	21 51	...	+ 14·3	...	...
	22 18	...	+ 13·8	...	...
	22 40	...	+ 13·0	...	...
	23 4	+ 13·6	+ 12·9	...	...
Nov. 5	20 19	+ 0·5	0·0	19 1	756·0
	21 4	...	− 0·5	21 1	756·6
	21 37	...	− 0·9	23 2	756·8
	22 14	...	− 1·0	...	...
	22 21	− 0·9	− 1·0	...	...
Nov. 7	20 31	− 4·2	− 4·9	19 9	753·8
	21 5	...	− 5·2	21 9	753·8
	21 30	− 5·3	− 5·5	23 10	754·6
Nov. 8	20 26	− 1·7	− 2·1	19 13	756·7
	20 53	...	− 2·6	21 13	757·1
	21 19	− 2·6	− 2·6	23 14	757·6
	21 54	...	− 3·0	...	...
	22 30	− 3·0	− 3·1	...	...

Digitized by Google

Date 1888.	Thermometer Readings (Centigrade). Sidereal time.	T_o	T_L	Barometer. Sidereal time.	Barometer at 0°. C.
	h m	°	°	h m	mm
Nov. 9	20 27	+ 0·2	— 0·2	19 17	757·8
	21 4	...	— 0·6	21 17	758·5
	21 31	— 0·7	— 0·9	23 18	758·6
	22 9	...	— 1·3	...	...
	22 33	— 1·6	— 1·7	...	...
Nov. 10	20 18	0·0	— 0·8	19 21	759·7
	20 47	...	— 1·2	21 21	760·0
	21 5	...	— 1·6	23 21	760·5
	21 36	— 1·6	— 1·6	...	...
...	...		...		
Nov. 11	20 33	+ 0·5	— 0·1	19 25	758·4
...	21 0	...	— 0·5	21 25	758·5
	21 25	— 0·4	— 0·8	23 25	757·8
	21 51	...	— 1·0	...	...
	22 17	— 1·0	— 1·0	...	...
Nov. 12	20 25	+ 0·2	0·0	19 29	755·5
...	20 54	...	— 0·5	21 29	755·7
...	21 27	— 0·7	— 0·8	23 29	755·7
	22 3	...	— 1·3	...	...
	22 30	— 1·2	— 1·6	...	...
Nov. 13	20 34	— 0·4	— 1·0	19 33	753·6
	21 9	...	— 1·2	21 33	753·6
				23 33	753·5
Nov. 14	20 46	— 1·0	— 1·7	19 37	757·2
...	21 6	...	— 1·8	21 37	757·9
..	21 35	— 1·7	— 2·3	23 37	758·7
..	22 4	...	— 2·7	...	...
	22 37	— 2·9	— 3·1	...	...
Nov. 15	20 39	+ 0·4	— 0·4	19 41	762·1
	21 15	...	— 1·1	21 41	762·2
	21 39	— 1·0	— 1·6	23 41	762·4
..	22 3	...	— 1·5	...	...
..	22 24	— 1·3	— 1·6	...	...
Nov. 17	20 47	+ 7·2	+ 7·0	19 48	753·5
	21 19	...	+ 6·0	21 49	753·0
	22 3	+ 5·8	+ 5·2	23 49	752·5
	22 29	+ 5·6	+ 5·5	...	...
Nov. 18	20 41	+ 5·9	+ 5·0	19 52	751·7
	21 8	...	+ 4·9	21 53	751·9
...	21 37	...	+ 4·9	23 53	751·8
...	22 15	+ 4·5	+ 4·3	...	...

Date 1888.	Thermometer Readings (Centigrade). Sidereal time.	T_o	T_L	Barometer. Sidereal time.	Barometer at 0° C.
	h m	°	°	h m	mm
Nov. 29	21 13	+ 5·1	+ 4·9	20 36	741·5
	21 50	...	+ 4·5	22 36	741·0
	22 17	...	+ 4·3	0 36	740·4
	22 51	+ 4·3	+ 4·2	...	...
Dec. 3	21 39	+ 6·0	+ 5·3	20 51	759·6
	22 14	...	+ 4·9	22 52	759·5
	22 45	..	+ 4·3	0 52	759·5
	23 14	+ 4·4	+ 4·0	...	...
Dec. 5	21 23	+ 5·7	+ 5·6	20 59	760·5
	21 56	...	+ 4·1	23 0	760·9
	22 21	...	+ 2·5	1 0	761·0
	22 56	+ 3·7	+ 3·2	...	...
Dec. 6	21 26	+ 2·7	+ 2·1	21 3	761·8
...	21 46	...	+ 1·7	23 4	762·0
...	22 7	+ 2·0	+ 2·0	1 4	762·0
..	22 31	...	+ 1·0	...	...
..	23 10	+ 1·5	+ 1·1	...	...
Dec. 7	21 29	+ 2·8	+ 2·0	21 7	760·1
	21 54	...	+ 1·3	23 8	760·4
	22 22	+ 1·9	+ 1·4	1 8	760·4
	22 57	...	+ 0·9	...	...
	23 13	+ 0·9	+ 0·7	...	...
Dec. 8	21 13	+ 3·6	+ 2·2	21 11	759·1
	21 36	...	+ 1·6	23 12	758·6
	22 6	...	+ 1·2	1 12	758·5
	22 28	...	+ 1·0	...	...
	22 56	+ 1·1	+ 0·8	...	...
Dec. 10	21 16	+ 2·1	+ 1·7	21 19	752·4
	...	...	...	23 19	753·3
	...	...	...	1 20	753·8
Dec. 11	21 17	+ 1·0	+ 0·8	21 23	756·3
	21 37	+ 0·4	+ 0·0	23 23	757·0
	...	...	...	1 24	757·6
Dec. 13	21 26	— 1·1	— 1·9	21 31	766·6
	21 49	...	— 2·3	23 31	766·3
	22 21	— 2·1	— 2·5	1 32	766·2
	22 46	...	— 2·8	...	...
	23 19	— 2·9	— 3·0	...	..

Digitized by Google

OBSERVATIONS FOR THE EQUATORIAL ADJUSTMENTS.

1888, September 28.

1 Hev. Draco. U.C.

Position Circle.	Sidereal Time.	Declination Circle.	Hour Circle.	Bar. and Ther.	
°	h m s	° ′ ″	h m s	h m	mm.
359	20 59 59·9	81 47 13	11 37 38·9	20 32	753·9
A.f.	21 5 10·1	46 24	42 48·5	22 32	753·9
179	12 20·4	46 30	49 57·8		
	17 49·3	47 18	55 26·2		
179	21 26 56·2	98 10 19	0 6 13·0		
A.v.	32 4·6	9 26	11 20·6		
359	38 0·8	9 19	17 15·1		
	43 11·3	10 10	22 24·9		

δ Aquarii.

°	h m s	° ′ ″	h m s	h m	°
359	21 55 29·1	351 41 43	23 43 51·1	21 23	+ 10·0
A.v.	22 0 12·3	40 51	48 34·1	21 48	+ 9·5
179	5 16·4	40 59	53 38·0	22 37	+ 8·6
	10 5·0	41 51	58 26·3		
179	22 17 3·4	188 15 54	12 5 32·6		
A.f.	21 57·4	15 2	10 26·3		
359	26 47·7	14 53	15 16·0		
	32 1·7	15 47	20 29·8		

Digitized by Google

Digitized by Google

OXFORD (Radcliffe)

OBSERVATIONS OF IRIS

IN

1888.

Digitized by Google

RADCLIFFE HELIOMETER OBSERVATIONS OF IRIS.

OBSERVER—E. J. STONE.

1888, October 30.

Iris and D. M. 22°·331.

Telescope E.

Oxford Sidereal Time.	Microscopes. B.	Microscopes. A.	Position Circle.
h m s	div.	div.	° ′
22 53 43	74·966	204·213	G. 77 7½
	·963	·220	
	75·972	205·211	
Repeated.			
23 0 51	74·975	204·221	G. 77 11
	·973	·217	
	75·982	205·212	
	·988		
Rotated Position Circle, 180°.			
23 16 11	74·772	203·937	G. 257 20
	·771	·952	
	75·766	204·943	
Repeated.			
23 25 32	74·764	203·946	G. 257 26
	·773	·951	H. 77 23½
Reversed Segments.			
23 34 19	202·624	73·957	G. 257 31½
	·631	·974	H. 77 31
		·967	
	203·622	74·962	
Repeated.			
23 39 26	202·658	73·970	G. 257 33
	·659	·972	H. 77 32
	203·659	74·963	
Rotated Position Circle, 180°.			
23 45 56	202·861	74·247	G. 77 33½
	·859	·248	H. 257 34
	203·853	75·222	
Repeated.			
23 50 59	202·845	74·216	G. 77 39
	·841	·222	H. 257 38½
	203·832	75·205	

	Bar. red. to 32° F.	Ther.
h m	in.	°
At 22 54	29·701	49·7
,, 23 34	29·709	49·4

Iris and D. M. 20°·404.

Telescope E.

Oxford Sidereal Time.	Microscopes. B	Microscopes. A.	Position Circle.
h m s	div.	div.	° ′
0 14 15	236·039	44·782	G. 67 6½
	·041	·778	H. 247 6½
	237·042	45·752	
	·040		
Repeated.			
0 18 56	236·062	44·764	H. 247 4
	·062	·772	G. 67 4½
	·062	·776	
Rotated Position Circle, 180°.			
0 28 22	235·939	44·502	G. 247 4
	·932	·507	H. 67 2½
	·946		
	·927		
	236·925	45·499	
Repeated.			
0 46 40	236·026	44·502	G. 246 56
	·019	·500	H. 66 54½
Reversed Segments.			
0 58 27	43·737	235·798	G. 246 53
	·727	·802	H. 66 51
	·730		
	44·717	236·780	
Repeated			
1 4 9	43·727	235·807	G. 246 50
	·722	·796	H. 66 47½
Rotated Position Circle, 180°.			
1 8 34	43·744	236·004	G. 66 48
	·751	·003	H. 246 47
	44·756	237·004	
Repeated.			
1 14 3	43·878	236·022	G. 66 45
	·876		H. 246 45
	44·878	237·007	
Repeated.			
1 23 14	43·826	236·022	G. 66 43½
	·835		H. 246 43

	Bar. red. to 32° F.	Ther.
h m	in.	°
At 0 14	29·718	48·5
,, 0 47	29·724	48·3
,, 1 14	29·725	47·9

Iris and D. M. 20°·404.

Telescope W.

Oxford Sidereal Time.	Microscopes. B.	Microscopes. A.	Position Circle.
h m s	div.	div.	° ′
2 1 55	43·472	235·857	G. 67 0
	·468	·859	H. 246 58
	44·468	236·832	
Repeated.			
2 8 21	43·479	235·868	G. 66 56½
	·475	·867	H. 246 58½
Rotated Position Circle 180°.			
2 15 21	43·429	236·007	G. 246 57
		·003	H. 66 54½
	44·430	236·985	
Repeated.			
2 21 53	43·464	236·010	G. 246 51½
	·460	·007	H. 66 48½
	44·462	236·987	
Reversed Segments.			
2 35 21	235·594	43·512	G. 246 45½
	·602	·511	H. 66 43½
	236·600	44·501	
Repeated.			
2 41 0	235·698	43·530	G. 246 48½
	·710	·534	H. 66 46
	236·705		
Rotated Position Circle 180°			
2 50 17	235·539	43·294	G. 66 42½
	·534	·293	H. 246 41½
	236·519	44·287	
Repeated.			
2 56 55	235·619	43·281	G. 66 42½
	·635	·298	H. 246 41½
	·629		

	Bar. red. to 32° F.	Ther.
h m	in.	°
At 2 2	29·734	47·1
,, 2 35	29·738	47·0

Digitized by Google

1888, October 30—*continued.*

Iris and D. M. 22°·331.

Telescope W.

Oxford Sidereal Time.	Microscopes. B.	Microscopes. A.	Position Circle.
h m s	div.	div.	° ′
3 17 54	202·899	74·519	G. 79 59½
		·522	H. 259 58½
	203·890	75·500	
Repeated.			
3 24 4	202·867	74·522	G. 80 2
			H. 259 59½
Rotated Position Circle 180°.			
3 30 33	203·000	74·663	G. 260 4
	·000	·663	H. 80 2½
		75·637	
		·633	
Repeated.			
3 35 34	203·000	74·666	G. 260 5
	·001	·663	H. 80 2½
		75·644	

Iris and D. M. 22°·331—*continued.*

Telescope W.—*continued.*

Reversed Segments.

Oxford Sidereal Time.	Microscopes. B.	Microscopes. A.	Position Circle.
h m s	div.	div.	° ′
3 44 50	74·069	202·957	G. 260 10½
	·070	·961	H. 80 8
	75·068	203·957	
Repeated.			
3 50 16	74·165	202·986	G. 260 17
	·163		H. 80 14½
Another observation.			
...	74·132	202·989	...

Iris and D. M. 22°·331—*continued.*

Telescope W.—*continued.*

Rotated Position Circle 180°.

Oxford Sidereal Time.	Microscopes. B.	Microscopes. A.	Position Circle.
h m s	div.	div.	° ′
3 58 28	74·011	202·846	G. 80 17
	·006	·852	H. 260 15
		203·843	
Repeated.			
4 2 54	73·983	202·843	G. 80 21
	·987	·844	H. 260 20
	74·972	203·837	

	Bar. red. to 32° F.	Ther.
	in.	°
At 3 18	29·742	46·4
„ 3 58	29·744	46·3

1888, November 13.

Iris and D. M. 20°·341.

Telescope E.

Oxford Sidereal Time.	Microscopes. B.	Microscopes. A.	Position Circle.
h m s	div.	div.	° ′
22 17 32	80·205	203·094	H. 261 27
	·207	·094	G. 81 27
	81·214	204·081	
Repeated.			
22 28 0	80·121	203·057	H. 261 32
	·114	·061	G. 81 34
	81·121	204·050	
Rotated Position Circle, 180°.			
22 35 9	79·800	202·763	H. 81 36½
	·791	·770	G. 261 36½
	80·787	203·765	
Repeated.			
22 42 29	79·783	202·764	H. 81 41½
	·779	·767	G. 261 43
	80·777	203·764	

Iris and D. M. 20°·341—*continued.*

Telescope E.—*continued.*

Reversed Segments.

Oxford Sidereal Time.	Microscopes. B.	Microscopes. A.	Position Circle.
h m s	div.	div.	° ′
22 58 55	202·466	80·000	H. 81 50
	·464	·000	G. 261 53
	203·462	80·987	
Repeated.			
23 7 8	202·650	80·145	H. 81 52½
	·659	·137	G. 261 55½
		·140	
	203·640	81·133	
	·642		

Iris and D. M. 20°·341—*continued.*

Telescope E.—*continued.*

Rotated Position Circle, 180°.

Oxford Sidereal Time.	Microscopes. B.	Microscopes. A.	Position Circle.
h m s	div.	div.	° ′
23 13 40	202·969	80·444	H. 261 56½
	·966	·441	G. 81 57½
	203·957	81·430	
Repeated.			
23 19 27	202·999	80·453	H. 261 56½
	·995	·446	G. 81 57½
		·448	
	203·984	81·436	

	Bar. red. to 32° F.	Ther.
h m	in.	°
At 22 17	29·395	47·8
„ 22 59	29·409	47·3

Digitized by Google

1888, November 13—*continued.*

Iris and D. M. 19°·340.

Telescope E.

Oxford Sidereal Time.	Microscopes. B.	Microscopes. A.	Position Circle.
h m s	div.	div.	° ′
23 37 12	213·587	66·507	H. 239 31½
	·592	·516	G. 59 31½
		·505	
	214·588	67·496	
Repeated.			
23 44 59	213·624	66·497	H. 239 28
	·614	·493	G. 59 30
	·624		
	214·612	67·483	
Rotated Position Circle, 180°.			
23 54 2	213·480	66·252	H. 59 29
	·478	·250	G. 239 32
	·471		
	214·461	67·238	
Repeated.			
0 9 15	213·518	66·253	H. 59 24
	·518	·248	G. 239 28½
	214·513	67·243	
Reversed Segments.			
0 15 12	65·497	213·324	H. 59 15
	·493	·323	G. 239 19
	66·488	214·321	
Repeated.			
0 22 30	65·403	213·312	H. 59 12½
	·402		G. 239 17½
	66·399	214·302	
Repeated.			
0 27 58	65·384	213·316	H. 59 8½
	·382	·307	G. 239 15
	66·385	214·306	
	·392		
Rotated Position Circle, 180°.			
0 35 27	65·588	213·540	H. 239 7½
	·593	·534	G. 59 12
	66·585	214·533	
Repeated.			
0 42 10	65·522	213·539	H. 239 5½
	·534		G. 59 9½
	·525		
	·522		
	66·537	214·539	

	Bar. red. to 32° F.	Ther.
h m	in.	°
At 23·37	29·420	46·9
,, 0·15	29·441	47·1
,, 0·25	29·445	47·2

Iris and D. M. 19°·340.

Telescope W.

Oxford Sidereal Time.	Microscopes. B.	Microscopes. A.	Position Circle.
h m s	div.	div.	° ′
1 7 41	65·316	213·362	G. 59 31½
	·323	·356	H. 239 28½
	66·327	214·357	
Repeated.			
1 19 23	65·262	213·356	G. 59 25½
	·261		H. 239 25
	66·248	214·348	
Rotated Position Circle 180°.			
1 34 19	65·301	213·533	G. 239 21
	·303	·532	H. 59 18
	66·308	214·523	
Repeated.			
1 42 24	65·318	213·533	G. 239 19½
	·323		H. 59 17
	·316		
	66·320	214·532	
Reversed Segments.			
1 55 49	213·357	65·616	G. 239 12
	·339	·610	H. 59 11½
	·347		
	214·322	66·609	
	·347		
Repeated.			
2 2 36	213·393	65·602	G. 239 8½
	·391	·595	H. 59 6
	214·387	66·590	
Rotated Position Circle 180°.			
2 9 37	213·285	65·476	G. 59 5½
	·285	·484	H. 239 3½
	214·282	66·466	
		·467	
Repeated.			
2 15 24	213·378	65·468	G. 59 2½
	·378	·472	H. 239 2
	214·355	66·457	
	·365		

	Bar. red. to 32° F.	Ther.
h m	in.	°
At 1 8	29·454	47·0
,, 1 34	29·457	47·0
,, 2 10	29·464	47·0

Iris and D. M. 20°·341.

Telescope W.

Oxford Sidereal Time.	Microscopes. B.	Microscopes. A.	Position Circle.
h m s	div.	div.	° ′
2 34 0	203·567	80·307	G. 84 8
	·562	·307	H. 264 3½
	204·567	81·290	
Repeated.			
2 40 59	203·558	80·293	G. 84 14
	·555	·283	H. 264 10
	204·545	81·274	
Rotated Position Circle 180°.			
2 47 2	203·694	80·483	G. 264 13½
	·683	·483	H. 84 7½
	·696		
	204·686	81·474	
Repeated.			
2 52 26	203·789	80·483	G. 264 15
	·799		H. 84 9½
	204·792	81·467	
Reversed Segments.			
3 4 24	78·602	202·530	G. 264 22½
	·602	·533	H. 84 17
	79·598	203·534	
Repeated.			
3 11 47	78·613	202·536	G. 264 26½
	·612		H. 84 19½
	79·600	203·540	
Rotated Position Circle 180°.			
3 20 21	81·470	202·361	G. 84 30
	·467	·362	H. 264 27½
	82·471	203·361	
Repeated.			
3 25 45	81·418	202·357	G. 84 33
	·424	·357	H. 264 28½
	82·436	203·350	
	·428		

	Bar. red. to 32° F.	Ther.
h m	in.	°
At 2 47	29·477	46·7
,, 3 20	29·490	45·9

Digitized by Google

1888, November 16.

Iris and D. M. 19°·329.

Telescope E.

Oxford Sidereal Time.	Microscopes. B.	Microscopes. A.	Position Circle.
h m s	div.	div.	° ′
23 56 19	102·783	177·938	G. 50 46
"Sky hazy."	·772	·933	H. 230 45½
	103·778	178·926	
Repeated.			
0 3 0	102·869	177·935	G. 50 49½
	·868		H. 230 49
	103·860	178·925	
Repeated.			
0 18 15	102·886	177·936	G. 50 51½
	·867		H. 230 50½
	·875		
	103·870	178·921	
Rotated Position Circle, 180°.			
0 15 50	102·745	177·733	G. 230 56
"Clouds."	·742	·723	H. 50 54
	103·752	178·712	
Repeated.			
0 22 43	102·723	177·731	G. 231 0
"Sky clear."	·733		H. 50 58½
	103·735	178·716	
Reversed Segments.			
0 31 58	176·452	102·068	G. 231 8
	·436	·064	H. 51 6
	177·449	103·053	
Repeated.			
0 38 49	176·421	102·070	G. 231 15
	·424		H. 51 13
	177·421	103·063	
		·063	
Rotated Position Circle, 180°.			
0 46 46	176·289	102·248	G. 51 11
	·295	·255	H. 231 10½
	177·292	103·252	
Repeated.			
0 51 21	176·290	102·260	G. 51 15½
	·296	·256	H. 231 15
		·247	
	177·286	103·252	

	Bar. red. to 32° F.	Ther.
h m	in.	°
At 23 56	29·920	51·1
,, 0 32	29·921	50·0

Iris and D. M. 18°·283.

Telescope E.

Oxford Sidereal Time.	Microscopes. B.	Microscopes. A.	Position Circle.
h m s	div.	div.	° ′
1 5 30	179·194	101·543	G. 75 41½
	·182	·546	H. 255 41
	180·172	102·527	
Repeated.			
1 13 45	179·179	101·567	G. 75 31
	·174	·569	H. 255 31
	180·181	102·548	
Rotation Position Circle, 180°.			
1 20 43	179·007	101·337	G. 255 32
	·003	·332	H. 75 30
	180·008	102·316	
Repeated.			
1 27 11	178·984	101·330	G. 255 29
	·991	·322	H. 75 26½
		·322	
	179·986	102·306	
Reversed Segments.			
1 39 52	100·648	178·807	G. 255 18
	·639	·799	H. 75 15½
	101·638	179·793	
Repeated.			
1 45 51	100·648	178·809	G. 255 12
	·643	·807	H. 75 9½
	101·630	179·808	
Rotated Position Circle, 180°.			
1 52 46	100·777	178·993	G. 75 8
	·780	·997	H. 255 7
	101·776	179·970	
Repeated.			
1 57 40	100·785	179·001	G. 75 4½
	·779	·002	H. 255 4
	101·784	179·996	
		·992	

	Bar. red. to 32° F.	Ther.
h m	in.	°
At 1 5	29·915	49·4
,, 1 40	29·920	49·2

Iris and D. M. 18°·283.

Telescope W.

Oxford Sidereal Time.	Microscopes. B.	Microscopes. A.	Position Circle.
h m s	div.	div.	° ′
2 20 25	100·747	178·838	H. 255 16
	·753	·848	G. 75 17½
	101·759	179·823	
Repeated.			
2 26 46	100·724	178·846	H. 255 9½
	·734	·847	G. 75 11
	101·723	179·826	
Rotated Position Circle, 180°.			
2 33 15	100·812	178·972	H. 75 6½
	·788	·976	G. 255 8
	·784		
	101·786	179·954	
Repeated.			
2 38 20	100·861	178·972	H. 75 3
	·856	·972	G. 255 6
	101·859	179·953	
Reversed Segments.			
2 46 55	178·825	101·317	H. 74 51
	·834	·321	G. 254 54½
	·822		
	179·836	102·296	
Repeated.			
2 52 10	178·823	101·316	H. 74 45½
	·828	·314	G. 254 48½
	179·822	102·293	
Rotated Position Circle, 180°.			
2 59 21	180·749	101·207	H. 254 45½
	·753	·193	G. 74 47
	·740		
	181·749	102·213	
Repeated.			
3 7 12	180·725	101·211	H. 254 40½
	·721	·208	G. 74 42
	181·720	102·193	

	Bar. red. to 32° F.	Ther.
h m	in.	°
At 2 20	29·914	49·0
,, 2 59	29·915	48·8

Digitized by Google

1888, November 16—*continued.*

Iris and D. M. 19°·329.

Telescope W.

Oxford Sidereal Time.	Microscopes. B.	Microscopes. A.	Position Circle.
h m s	div.	div.	° ′
3 21 45	177·503	103·944	H. 233 38½
	·499	·942	G. 53 39
	178·484	104·928	
	·494		
Repeated.			
3 27 58	177·500	103·934	H. 233 47
	·495	·933	G. 53 47½
	178·484	104·920	
Rotated Position Circle, 180°.			
3 34 22	177·429	103·930	H. 53 44
	·426	·931	G. 233 47½
	178·409	104·928	
Reversed Segments.			
3 43 36	103·530	177·581	H. 53 55½
	·527	·573	G. 233 58
	104·523	178·567	
Repeated.			
3 48 51	103·527	177·594	H. 54 1½
	·533	·583	G. 234 4
	104·533	178·584	

Iris and D. M. 19°·329—*continued.*

Telescope W.—*continued.*

Rotated Position Circle, 180°.

Oxford Sidereal Time.	Microscopes. B.	Microscopes. A.	Position Circle.
h m s	div.	div.	° ′
3 56 30	103·598	177·589	H. 234 2½
	·606	·585	G. 54 4½
	104·596	178·579	
Repeated.			
4 2 34	103·622	177·580	H. 234 8½
	·629	·574	G. 54 9½
	104·622	178·563	
Repeated.			
4 8 25	103·639	177·576	H. 234 13
	·638	·579	G. 54 14½
	104·631	178·569	
Reversed Segments.			
4 23 33	176·711	103·377	H. 234 29
	·715	·366	G. 54 30½
	177·722	104·364	
Repeated.			
4 29 35	176·663	103·369	H. 234 30
	·660	·366	G. 54 31½
	177·677	104·368	

Iris and D. M. 19°·329—*continued.*

Telescope W.—*continued.*

Rotated Position Circle, 180°.

Oxford Sidereal Time.	Microscopes. B.	Microscopes. A.	Position Circle.
h m s	div.	div.	° ′
4 35 35	176·589	103·336	H. 54 31½
	·593	·339	G. 234 33
	177·598	104·334	
Repeated.			
4 40 10	176·621	103·349	H. 54 36
	·612	·350	G. 234 38½
	177·626	104·339	

Bar. red. to 32° F.		Ther.
h m	in.	°
At 3 34	29·917	48·8
,, 4 3	29·903	48·6
,, 4 36	29·895	48·6

1888, November 20.

Iris and D.M. 18°·277.

Telescope E.

Oxford Sidereal Time.	Microscopes. B.	Microscopes. A.	Position Circle.
h m s	div.	div.	° ′
23 32 15	144·752	134·564	G. 222 6
	·764	·561	H 42 5
	·772		
	·768		
	145·769	135·544	
	·754		
Repeated.			
23 42 5	144·814	134·561	G. 221 41½
	·811		H. 41 40½
	145·819	135·549	
Repeated.			
23 45 4	144·830	134·572	G. 221 4
	·832	·571	H. 41 3
	145·836	135·554	

Iris and D. M. 18°·277—*continued.*

Telescope E.—*continued.*

Rotated Position Circle, 180°.

Oxford Sidereal Time.	Microscopes. B.	Microscopes. A.	Position Circle.
h m s	div.	div.	° ′
23 50 41	144·999	134·731	G. 40 21½
	·993	·742	H. 220 22
		·747	
	145·998	135·727	
Repeated.			
23 59 57	145·002	134·738	G. 39 11½
	·002	·732	H. 219 11
	145·999	135·717	
		·721	
Reversed Segments.			
0 9 52	134·429	145·349	G. 39 37½
	·431	·349	H. 219 38
	135·419	146·335	
Repeated.			
0 13 58	134·342	145·346	G. 39 44½
	·337	·341	H 219 44
	135·321	146·333	

Iris and D. M. 18°·277—*continued.*

Telescope E.—*continued.*

Repeated.

Oxford Sidereal Time.	Microscopes. B.	Microscopes. A.	Position Circle.
h m s	div.	div.	° ′
0 17 49	134·348	145·349	G. 39 12
	·347	·344	H. 219 12
	135·338	146·337	
Rotated Position Circle, 180°.			
0 25 44	134·208	145·208	G. 218 7½
	·210	·206	H. 38 6
	135·195	146·193	
Repeated.			
0 38 41	134·116	145·220	G. 217 29
	·111	·212	H. 37 27½
	135·111	146·207	

Bar. red. to 32° F.		Ther.
h m	in.	°
At 23 32	29·707	40·5
,, 0 10	29·714	42·2
,, 0 39	29·724	41·1

Digitized by Google

1888, November 20—*continued.*

Standard Stars.

Telescope E.

Oxford Sidereal Time.	Microscopes. B.	Microscopes. A.	Position Circle.
h m s	div.	div.	° ′
0 59 57	250·440	29·187	G. 73 7½
	·436	·188	H. 253 7½
	251·441	30·173	
Repeated.			
1 7 37	250·453	29·211	G. 73 5
	·452	·214	H. 253 5
	251·441	30·200	
Rotated Position Circle, 180°.			
1 16 36	250·316	29·032	G. 253 9½
	·306	·036	H. 73 8½
	·300		
	251·314	30·017	
	·314		
Repeated.			
1 23 35	250·335	29·040	G. 253 10
	·337	·042	H. 73 8½
	251·333	30·015	
Reversed Segments.			
1 43 9	28·459	250·221	G. 253 10½
	·461	·216	H. 73 9
	29·460	251·205	
Repeated.			
1 49 4	28·471	250·207	G. 253 10½
	·465	·209	H. 73 9
	29·467	251·198	
Rotated Position Circle, 180°.			
1 55 37	28·579	250·356	G. 73 8½
	·566	·357	H. 253 7½
	29·563	251·350	
Repeated.			
2 2 46	28·573	250·359	G. 73 9
	·565	·363	H. 253 8½
	29·562	251·357	

Bar. red. to 32° F. h m	in.	Ther. °
At 1 0	29·737	42·0
1 43	29·742	40·5

Standard Stars.

Telescope W.

Oxford Sidereal Time.	Microscopes. B.	Microscopes. A.	Position Circle.
h m s	div.	div.	° ′
2 20 47	28·487	250·236	H. 253 38
	·487	·236	G. 73 39½
	29·483	251·227	
Repeated.			
2 26 27	28·501	250·243	H. 253 36½
	·501	·242	G. 73 37½
	29·500	251·238	
Rotated Position Circle, 180°.			
2 33 49	28·568	250·367	H. 73 37½
	·568	·372	G. 253 40
	29·557	251·356	
Repeated.			
2 39 44	28·566	250·364	H. 73 37½
	·563	·366	G. 253 40
	29·572	251·350	
	·578		
Reversed Segments.			
2 51 44	249·916	28·648	H. 73 32½
	·904	·646	G. 253 35
	·917		
	250·909	28·644	
	·918		
Repeated.			
2 57 32	249·890	28·643	H. 73 33
	·908	·646	G. 253 35
	·886		
	250·890	29·638	
Rotated Position Circle, 180°.			
3 9 42	249·845	28·557	H. 253 35½
	·852	·563	G. 73 36½
	250·853	29·552	
Repeated.			
3 15 51	249·856	28·547	H. 253 37½
	·859	·547	G. 73 38½
	250·844	29·544	

Bar. red. to 32° F. h m	in.	Ther. °
At 2 21	29·753	41·2
2 52	29·763	40·0

Iris and D. M. 18°·277.

Telescope W.

Oxford Sidereal Time.	Microscopes. B.	Microscopes. A.	Position Circle.
h m s	div.	div.	° ′
3 41 13	146·403	134·426	H. 25 55
	·403	·436	G. 205 57
	147·398	135·427	
Repeated.			
3 47 12	146·435	134·440	H. 25 36½
	·435	·433	G. 205 38
	147·433	135·426	
Rotated Position Circle, 180°.			
3 54 44	146·721	134·580	H. 205 10
	·723	·584	G. 25 11
	147·716	135·572	
Repeated.			
4 0 8	146·731	134·589	H. 205 4½
	·739	·596	G. 25 6½
	147·730	135·581	
Reversed Segments.			
4 9 11	133·971	146·813	H. 204 33
	·983	·814	G. 24 34
	134·960	147·804	
Repeated.			
4 16 37	133·897	146·778	H. 204 11½
	·896	·783	G. 24 12½
	134·885	147·766	
	·882		
Rotated Position Circle, 180°.			
4 26 31	133·657	146·624	H. 24 4½
	·657	·629	G. 204 5½
	·644		
	134·641	147·613	
Repeated.			
4 34 1	133·494	146·631	H. 23 44½
	·489	·623	G. 203 46½
	134·493	147·613	
Repeated.			
4 40 57	133·441	146·628	H. 23 25
	·427		G. 203 27
	134·432	147·603	
Rotated Position Circle, 180°.			
4 51 52	133·568	146·804	H. 202 26½
	·562	·805	G. 22 27
	134·549	147·799	

Bar. red. to 30° F. h m	in.	Ther. °
At 3 41	29·767	40·4
„ 4 9	29·782	40·1
„ 4 34	29·794	40·6
„ 4 52	29·797	41·8

Digitized by Google

1888, December 6.

Iris and D. M. 16°·247.

Telescope E.

Oxford Sidereal Time.	Microscopes. B.	Microscopes. A.	Position Circle.
h m s	div.	div.	° ′
0 16 32	167·092	112·927	G. 266 19
	·099	·929	H. 86 17⅔
	168·092	113·930	
	·079	·922	
	·088		
Repeated.			
0 23 35	167·012	112·897	G. 266 18
	·009	·899	H. 86 16¾
	168·009	113·896	
	·009	·896	
Reversed Segments (before rotating Position Circle 180°, contrary to usual practice).			
0 37 5	112·293	166·810	G. 266 19½
	·294	·809	H. 86 17⅔
	113·286	167·792	
	·286	·797	
Repeated.			
0 43 27	112·329	166·817	G. 266 19⅛
	·333	·814	H. 86 17⅔
	113·328	167·798	
	·326	·799	
Rotated Position Circle, 180°.			
0 52 40	112·629	167·023	G. 86 16½
	·634	·027	H. 266 16½
	113·623	168·017	
	·630	·014	
Repeated.			
1 7 37	112·726	167·033	G. 86 18½
	·719	·035	H. 266 18½
	113·722	168·028	
	·723	·026	

Iris and D. M. 16°·247—*continued.*

Telescope E.—*continued.*

Oxford Sidereal Time.	Microscopes. B.	Microscopes. A.	Position Circle.
Reversed Segments (again).			
h m s	div.	div.	° ′
1 20 21	166·649	112·962	G. 86 8
	·641	·962	H. 266 7¾
	167·643	113·972	
	·643	·963	
Repeated.			
1 34 40	166·553	112·999	G. 86 4½
	·550	·991	H. 266 4
	167·549	113·992	
	·545	·985	
Repeated.			
1 43 24	166·424	112·961	G. 86 4½
"Very hazy for the last few sets."	·413	·954	H. 206 4
	·426		
	167·408	113·960	
	·410	·957	

	Bar. red. to 32° F.	Ther.
h m	in.	° ′
At 0 17	29·913	52 5
„ 0 53	29·897	49 2
„ 1 35	29·897	48 0

Standard Stars.

Telescope E.

Oxford Sidereal Time.	Microscopes. B.	Microscopes. A.	Position Circle.
h m s	div.	div.	° ′
2 24 15	250·325	28·008	G. 253 9¾
	·316	·010	H. 73 8
		·001	
	251·317	29·001	
	·322	·002	
Repeated.			
2 51 45	250·368	28·008	G. 253 9¾
	·362	·009	H. 73 8
"Cloudy."	251·372	29·008	
	·373		
Repeated.			
3 1 26	250·361	28·013	G. 253 9½
"Better."	·357	·013	H. 73 8
	251·361	29·009	
	·361		

Standard Stars—*continued.*

Telescope E.—*continued.*

Oxford Sidereal Time.	Microscopes. B.	Microscopes. A.	Position Circle.
Rotated Position Circle, 180°.			
h m s	div.	div.	° ′
3 27 41	249·353	28·143	G. 73 6¼
	·364	·138	H. 253 5½
		·138	
	250·362	29·134	
	·366		
Repeated.			
3 43 6	249·428	28·136	G. 73 6¼
"Sky clearer."	·429	·132	H. 253 5⅔
	250·432	29·128	
	·431	·125	
Repeated.			
4 2 25	249·425	28·127	G. 73 4½
	·429	·128	H. 253 3⅓
	250·421	29·124	
	·425	·123	
Reversed Segments.			
4 20 5	27·936	249·848	G. 73 4
	·941	·851	H. 253 3¼
	·931		
	28·934	250·840	
	·933	·830	
Repeated.			
4 34 40	27·937	249·854	G. 73 4¼
	·938	·851	H. 253 3⅔
	28·928	250·834	
	·932	·833	
Rotated Position Circle, 180°.			
4 48 43	27·944	249·773	G 253 5
	·949	·777	H. 73 2⅔
		·754	
	28·942	250·755	
	·946	·758	
Repeated.			
5 6 25	27·941	249·787	G. 253 6¼
	·951	·788	H. 73 3⅔
	28·944	250·776	
	·947	·766	

Digitized by Google

1888, December 6—*continued.*

Standard Stars—*continued.*

Telescope W.

Oxford Sidereal Time.	Microscopes. B.	Microscopes. A.	Position Circle.
h m s	div.	div.	° ′
5 27 5	27·972	249·823	H. 73 36⅔
	·969	·841	G. 253 39
		·834	
	28·971	250·819	
	·952	·816	
Repeated.			
5 33 48	27·936	249·836	H. 73 37
	·929	·836	G. 253 39¼
	28·921	250·820	
	·941	·817	
	·928		
Rotated Position Circle, 180°.			
5 41 55	27·970	249·802	H. 253 36¾
	·966	·788	G. 73 37½
		·791	
	28·968	250·778	
	·967	·778	
Repeated.			
5 51 25	27·981	249·776	H. 253 36⅓
	·978	·781	G. 73 36½
	28·972	250·774	
	·977	·779	
Reversed Segments.			
6 4 10	28·914	250·221	H. 253 36
	·914	·233	G. 73 36
	29·903	251·222	
	·907	·217	
Repeated.			
6 12 15	250·241	28·906	H. 253 37
	·250	·908	G. 73 37¼
	251·250	29·902	
	·254	·913	

Standard Stars—*continued.*

Telescope W.—*continued.*

Oxford Sidereal Time.	Microscopes. B.	Microscopes. A.	Position Circle.
Rotated Position Circle, 180°.			
h m s	div.	div.	° ′
6 19 40	250·220	28·940	H. 73 34½
	·241	·938	G. 253 36¼
	·224		
	251·223	29·936	
	·231	·934	
Repeated.			
6 25 55	250·240	28·950	H. 73 36
	·233	·942	G. 253 37¾
	251·240	29·939	
	·230	·947	

	Bar. red. to 32° F.	Ther.
	in.	°
At 2 24	29·880	47·0
„ 3 1	29·876	46·4
„ 3 27	29·869	46·0
„ 4 2	29·867	45·5
„ 4 20	29·865	45·3
„ 4 49	29·865	45·0
„ 5 27	29·854	44·8
„ 5 51	29·845	44·1
„ 6 19	29·839	44·4

Iris and D. M. 16°·247.

Telescope W.

Oxford Sidereal Time.	Microscopes. B.	Microscopes. A.	Position Circle.
h m s	div.	div.	° ′
6 43 10	163·786	112·887	H. 86 6⅔
	·776	·880	G. 266 8⅓
	164·758	113·882	
	·772	·879	
Repeated.			
6 51 55	163·718	112·884	H. 86 6¼
	·716	·884	G. 266 8¼
	164·715	113·879	
"Very faint."	·714	·878	

Iris and D. M. 16°·247—*continued.*

Telescope W.—*continued.*

Oxford Sidereal Time.	Microscopes. B.	Microscopes. A.	Position Circle.
Rotated Position Circle, 180°.			
h m s	div.	div.	° ′
7 6 42	163·704	112·770	H. 266 16½
	·707	·776	G. 86 16½
"Very faint."	164·716	113·765	
	·710	·777	
Repeated.			
7 15 17	163·586	112·778	H. 266 10½
	·587	·788	G. 86 10½
"Very faint."	164·593	113·777	
	·584	·774	
Reversed Segments.			
7 25 40	109·692	160·659	H. 266 10
	·682	·676	G. 86 10⅔
"Desperately faint."	110·683	161·664	
	·686	·660	
Repeated.			
7 38 5	115·550	166·340	H. 266 10
	·553	·355	G. 86 10
	116·546	167·333	
	·547		

"Too faint for any useful observation."
"Lost in Low West."

	Bar. red. to 32° F.	Ther.
	h m	in.	°
At	6 43	29·825	44·3
„	7 7	29·817	44·0
„	7 15	29·816	44·0
„	7 26	29·814	44·0
„	7 38	29·812	44·1

Digitized by Google

1889, December 9.

Iris and D. M. 16°·247.

Telescope W.

Oxford Sidereal Time.	Microscopes. B.	Microscopes. A.	Position Circle.
h m s	div.	div.	° ′
1 27 6	132·113	148·564	H. 94 8½
	·115	·568	G. 274 10
	133·106	149·560	
	·100	·564	
Repeated.			
1 35 26	132·129	148·586	H. 94 12¼
	·130	·590	G. 274 14½
		·582	
	133·119	149·586	
	·127	·576	
Repeated.			
1 41 21	132·221	148·564	H. 94 0
	·226	·570	G. 274 2¼
	133·229	149·558	
	·234	·558	
Repeated.			
1 46 16	132·278	148·582	H. 94 10⅔
	·272	·583	G. 274 13
	133·269	149·573	
	·272	·586	
Rotated Position Circle, 180°.			
1 53 28	132·108	148·334	H. 274 12
	·101	·337	G. 94 12⅔
	133·097	149·323	
	·093	·322	
Repeated.			
2 1 18	132·175	148·314	H. 274 6
	·165	·322	G. 94 7½
	·179		
	133·180	149·320	
	·174	·319	
Reversed Segments.			
2 10 23	147·799	132·177	H. 274 5⅔
	·798	·175	G. 94 7⅓
	148·794	133·160	
	·791	·163	

Iris and D. M, 26°·247—*continued.*

Telescope W.—*continued.*

Oxford Sidereal Time.	Microscopes. B.	Microscopes. A.	Position Circle.
Repeated.			
h m s	div.	div.	° ′
2 23 17	147·677	132·190	H. 274 17½
	·678	·186	G. 94 18⅔
	148·675	133·178	
	·675	·174	
Repeated.			
2 30 1	147·668	132·218	H. 274 15⅔
	·677	·212	G. 94 17⅓
	148·659	133·200	
	·659	·197	
Rotated Position Circle, 180°.			
2 40 42	147·751	132·450	H. 94 5
	·764	·440	G. 244 7
	147·741	133·434	
	·752	·435	
Repeated.			
2 46 43	147·716	132·442	H. 94 7
	·723	·442	G. 274 9
	148·709	133·427	
	·707	·437	
Telescope E.			
3 15 37	147·644	132·521	G. 274 14⅓
	·640	·527	H. 94 12
	148·633	133·513	
	·627	·513	
Repeated.			
3 24 1	147·564	132·523	G. 274 15
	·553	·529	H. 94 13
	148·545	133·514	
	·534	·513	
Rotated Position Circle, 180°.			
3 32 38	147·566	132·678	G. 93 50½
	·561	·678	H. 273 49½
	148·549	133·671	
	·557	·669	
Repeated.			
3 39 56	147·506	132·690	G. 93 54½
	·493	·677	H. 273 53¼
	148·479	133·678	
	·482	·677	

Iris and D. M. 26°·274—*continued.*

Telescope W.—*continued.*

Oxford Sidereal Time.	Microscopes. B.	Microscopes. A.	Position Circle.
Reversed Segments.			
h m s	div.	div.	° ′
3 49 12	132·189	147·526	G. 94 32
	·189	·531	H. 274 30⅔
	133·194	148·509	
	·197	·514	
Repeated.			
3 55 34	132·243	147·519	G. 94 42
	·238	·523	H. 274 41⅓
	133·241	148·502	
	·238	·521	
Rotated Position Circle, 180°.			
4 4 26	132·283	147·406	G. 274 34
	·294	·408	H. 94 31⅔
	133·300	148·399	
	·280	·395	
Repeated.			
4 10 36	132·323	147·394	G. 274 24
	·338	·394	H. 94 22
	133·338	148·376	
	·330	·380	

Bar. red. to 32° F. Ther.

	h m	in.	°
At	1 27	30·089	39·0
,,	1 53	30·095	37·9
,,	2 23	30·097	36·0
,,	3 15	30·097	36·0
,,	3 49	30·103	35·4

Standard Stars.

Telescope E.

h m s	div.	div.	° ′
4 25 50	28·539	250·320	G. 253 8
	·541	·311	H. 73 5⅔
		·327	
	29·538	251·309	
	·533	·313	
Repeated.			
4 35 21	28·515	250·318	G. 253 8½
	·509	·332	H. 73 6¼
	29·510	251·321	
	·508	·326	

Digitized by Google

1889, December 9—*continued.*

Standard Stars—*continued.*

Telescope E.—*continued.*

Rotated Position Circle, 180°.

Oxford Sidereal Time.	Microscopes. B.	Microscopes. A.	Position Circle.
h m s	div.	div.	° ′
4 44 19	28·561	250·387	G. 73 7½
	·562	·380	H. 253 6½
	29·536	251·373	
	·560	·377	
Repeated.			
4 50 26	28·523	250·376	G. 73 8½
	·543	·372	H. 253 7
	·520		
	29·521	251·383	
	·536	·371	
Reversed Segments.			
5 10 2	249·649	28·324	G. 73 5½
	·640	·318	H. 253 4
	250·652	29·321	
	·650	·319	
Repeated.			
5 16 6	249·649	28·304	G. 73 6½
	·659	·313	H. 253 5
	250·649	29·302	
	·648	·305	
Rotated Position Circle, 180°.			
5 31 1	249·617	28·257	G. 253 6½
	·632	·269	H. 73 3⅔
	250·626	29·252	
	·633	·257	
Repeated.			
5 39 37	249·619	28·266	G. 253 8
	·621	·261	H. 73 5½
	250·613	29·271	
	·608	·272	

Standard Stars—*continued.*

Telescope W.

Oxford Sidereal Time.	Microscopes. B.	Microscopes. A.	Position Circle.
h m s	div.	div.	° ′
6 7 41	249·568	28·266	H. 73 35½
	·565	·277	G. 253 37½
	·563		
	250·576	29·276	
	·563	·267	
Repeated.			
6 13 40	249·611	28·274	H. 73 35
	·615	·276	G. 253 37½
	250·616	29·268	
	·618	·273	
Repeated.			
6 18 19	249·658	28·272	H. 73 35
	·653	·275	G. 253 36½
	250·656	29·269	
	·655	·270	
Rotated Position Circle, 180°.			
6 25 4	249·672	28·249	H. 253 36½
	·675	·254	G. 73 37½
	250·673	29·240	
	·679	·247	
Repeated.			
6 30 41	249·648	28·256	H. 253 37
	·649	·239	G. 73 37½
	250·645	29·249	
	·650	·240	

Standard Stars—*continued.*

Telescope W.—*continued.*

Reversed Segments.

Oxford Sidereal Time.	Microscopes. B.	Microscopes. A.	Position Circle.
h m s	div.	div.	° ′
6 42 1	27·689	249·492	H. 253 35
	·684	·503	G. 73 35
	28·672	250·469	
	·676	·482	
		·488	
Repeated.			
6 49 1	27·710	249·517	H. 253 34⅔
	·712	·512	G. 73 34⅔
	28·706	250·495	
	·708	·495	
Rotated Position Circle, 180°.			
6 52 6	27·625	249·509	H. 73 36
	·648	·510	G. 253 37⅓
	·619		
	28·620	250·499	
	·632	·493	
Repeated.			
7 2 56	27·658	249·512	H. 73 36
	·657	·504	G. 253 37⅓
	28·659	250·493	
	·656	·491	

	Bar. red. to 32° F.	Ther.
	h m	in.	°
At	4 26	30·109	37·0
,,	5 10	30·113	36·2
,,	5 40	30·111	36·0
,,	6 8	30·106	33·0
,,	6 42	30·102	32·7
,,	7 3	30·097	32·3

Digitized by Google

Digitized by Google

VOL. II., PART 2.

DISCUSSION

OF THE

PLACES OF THE COMPARISON STARS

FOR

IRIS, VICTORIA, AND SAPPHO,

FROM

MERIDIAN OBSERVATIONS MADE AT TWENTY-TWO OBSERVATORIES,

BY

ARTHUR AUWERS.

Digitized by Google

Digitized by Google

TABLE OF CONTENTS.

PAGE

Introduction 409

DIVISION I.—OBSERVATIONS OF COMPARISON STARS FOR IRIS.

Individual Results of Observations and Mean Results for each star reduced to homogeneity within the observer's system :

Berlin 413
Cape of Good Hope 417
Dublin 420
Greenwich 422
Leiden 423
Leipzig 426
Melbourne 430
Oxford (Radcliffe Obs.) 433
Pulkowa 434

Reduction of the different series to a normal system and Combination of results 437

Investigation of Proper Motions 456

Summary of Results 465

DIVISION II.—OBSERVATIONS OF COMPARISON STARS FOR VICTORIA.

Individual Results and Means within the Separate Series :

Algiers 469
Berlin 474
Bordeaux 479
Cambridge (Eng.) 481
Cambridge (Mass.) 483
Cape of Good Hope 487
Cincinnati 496
Cordoba 498
Dublin 502
Greenwich 503
Hamburg 505
Mt. Hamilton 507
Königsberg 514
Leiden 520
Leipzig 525
Melbourne 531
Naples 534
Oxford (Radcliffe Obs.) 543
Paris 544
Pulkowa 550
Vienna (Ottakring) 555
Washington 558

Reduction to normal system and Combination of results 569

Investigation of Proper Motions 602

Summary of Final Results 612

Digitized by Google

DIVISION III.—Observations of Comparison Stars for Sappho.

PAGE

Individual Results and Means within the Separate Series :

Berlin 615
Bordeaux 621
Cambridge (Eng.) 622
Cambridge (Mass.) 623
Cape of Good Hope 627
Cincinnati 633
Dublin 636
Greenwich 637
Leiden 638
Leipzig 640
Melbourne 646
Oxford (Radcliffe Obs.) 649
Pulkowa 651
Vienna (Ottakring) 654
Washington 655

Reduction to normal system and Combination of results 656
Investigation of Proper Motions 681
Summary of Results 692

DIVISION IV.—General.

Determination of Normal Values of Mean Error of observation for the different Observatories, of Constant Error of the different Instruments, and of Absolute Weights of the Separate Results 694

Magnitude of the observed stars and Experimental Investigation of Corrections depending on Magnitude 704

Digitized by Google

DISCUSSION OF THE PLACES OF THE COMPARISON STARS FOR IRIS, VICTORIA, AND SAPPHO.

INTRODUCTION.

The total number of Comparison Stars selected by Dr. Gill, the places of which are discussed in the following pages, amounts to 107 ; of these, 30 belong to the *Iris* series, 38 to the *Victoria* and 39 to the *Sappho* series. These numbers include the "Standard Stars" for each series, selected for continuous control of scale-value and of zero-point for position angles, as well as some stars originally included in the lists, but afterwards withdrawn and replaced by others.

Requests for observations of the *Iris* stars were made in 1888 by letters addressed to the Directors of nine observatories, all of whom kindly responded to the appeal. Thus, most of the *Iris* stars have been observed at each of the nine observatories about the time of the planet's opposition.

The lists of Comparison Stars for *Victoria* and *Sappho* were printed, and distributed in 1889 amongst a much greater number of observatories, with the result that 22 of them co-operated in observing the *Victoria* stars—one observatory contributing two independent series made with different instruments—some contributing a very large number of observations of each star, and most of them contributing observations, more or less numerous, of every star. The *Sappho* list was observed at 15 of the same observatories ; by some mistake the printed list did not reach some of them, and at others the observers were prevented by other work from continuing the observations beyond the summer of 1889, and for the same reason at some of the observatories the *Sappho* series was observed on a more limited scale than that for *Victoria* had been.

To secure greater accuracy in the relative places, four "Reference Stars" were added to the lists of comparison stars both for the *Victoria* and *Sappho* series. These were selected so that two of the reference stars preceded and two followed each group of comparison stars, their mean Declination being nearly the same as that of the comparison stars.

It was intended that these reference stars should be observed every night on which observations of any of the comparison stars were made, in order that all the observations at all the observatories might be referred to the same zero. Accordingly,

Digitized by Google

at most of the observatories these reference stars were observed; by some they were omitted, apparently from some misunderstanding as to the arrangement of the work—a misunderstanding not due to any fault on part of the observer, but to the fact that, from the distance of the Cape Observatory, there was not time to communicate with respect to any point on which observers might be in doubt.

As the places of the eight reference stars had first to be determined from the observations, the present work includes the discussion of the places of 115 stars of which 9,620 observations were communicated.

These observations are distributed as shown in the following Table :—

Observatory.	Iris Comparison Stars.		Victoria				Sappho				Total No. of Observations of Stars			Observations of Planet
			Comparison Stars		Reference Stars		Comparison Stars		Reference Stars					
	No. of Observations	No. of Stars	No. of Observations	No. of Stars	No. of Observations	No. of Stars	No. of Observations	No. of Stars	No. of Observations	No. of Stars	Comp. St.	Ref. St.	All	
Algiers	...	...	142	36	49	4	...	...	...	...	142	49	191	15
Berlin	129	25	240	38	104	4	264	39	140	4	633	244	877	54
Bordeaux	...	...	106	36	2	2	24	20	15	4	130	17	147	...
Cambridge, E.	...	...	136	37	57	4	140	38	60	4	276	117	393	30
Cambridge, M.	...	...	134	37	44	4	88	33	...	...	222	44	266	12
Cape of Good Hope	163	27	348	38	216	4	270	37	193	4	781	409	1,190	107
Cincinnati	...	...	139	37	47	4	158	39	86	4	297	133	430	24
Cordoba	...	...	140	37	...	...	...	...	...	...	140	...	140	26
Dublin	144	30	34	19	18	4	129	39	100	4	307	118	425	39
Greenwich	121	27	151	37	105	4	165	38	41	4	437	146	583	42
Hamburg	...	...	103	37	55	4	...	...	...	...	103	55	158	6
Mt. Hamilton	...	...	163	36	...	...	...	...	...	...	163	...	163	12
Königsberg	...	...	109	37	84	4	...	...	...	...	109	84	193	12
Leiden	140	30	143	37	53	4	25	23	13	4	308	66	374	27
Leipzig	196	30	259	38	127	4	293	39	89	4	748	216	964	93
Melbourne	85	26	151	37	96	4	171	38	115	4	407	211	618	31
Naples	...	...	363	37	214	4	...	...	...	...	363	214	577	48
Oxford (Radcliffe)	66	26	116	38	...	...	96	32	...	...	278	...	278	40
Paris, Gr. Instr. Mér.	...	...	261	37	68	4	...	...	...	...	261	68	329	27
„ Cercle du Jardin ...	...	...	111	36	32	4	...	...	...	...	111	32	143	14
Pulkowa	160	28	412	37	77	4	146	39	70	4	718	147	865	80
Vienna (Ottakring)	...	...	91	36	26	4	61	34	21	4	152	47	199	9
Washington	...	...	72	31	...	...	29	26	16	4	101	16	117	12
Total	1,204	(30)	3,924	(38)	1,474	(4)	2,059	(39)	959	(4)	7,187	2,433	9,620	760
			5,398				3,018							

Digitized by Google

Besides the 9,620 observations of the stars, 190 observations of *Iris*, 406 of *Victoria*, and 164 of *Sappho* were made in connection with them, giving the total number of 760 observations distributed among 21 of the 22 observatories as shown in the last column of the table.

In the completion of the reduction of some of the *Victoria* and *Sappho* series and in some parts of the further discussion of the observations, I have been assisted by Drs. H. Battermann and J. Lamp who were at the time my regular assistants ; and in some supplementary computations made in connection with the preparation of the manuscript for the press by my present assistant Dr. O. Stumpe. For all of the three groups a good deal of the comparison of the individual reduced results with their means and computation of apparent mean time from the differences was made by Dr. H. Harting ; and Dr. L. de Ball, then at the observatory of Lüttich, undertook the collection of previous observations from the existing catalogues and their reduction to epoch for comparison with the results of the new observations. The expense of this last part of the work, and of most of Dr. Lamp's work—mainly, however, relating to the comparison of the observed places of the planets with the ephemerides, the results of which are to be given in another place—was borne by The Royal Academy of Sciences, Berlin.

Digitized by Google

Digitized by Google

DIVISION I.

OBSERVATIONS OF COMPARISON STARS FOR IRIS.

Mean Places for Equinox 1888·0 as derived by the Observers and Investigation of Constant Day Corrections.

BERLIN.

Positions communicated by Dr. Küstner :—

Date 1888–9	Pos.	R.A.	Dec.
a		h m 2 0	° ′ + 20 3
Oct. 24	II	s 3·898	″ 25·15
25	IV	·954	25·58
Nov. 5	I	·893	25·01
11[1]	I	·882	25·33
13	III	·863	25·57
Dec. 29	II	·954	25·22
Jan. 4	IV	·960	25·74
10	III	·942	25·48
1888·91	(8)	3·918	25·39
b		h m 2 1	° ′ + 17 29
Oct. 19	II	s 37·021	″ 43·62
28	IV	·016	43·53
Nov. 7	I	36·980	43·52
9	III	37·032	43·48
1888·84	(4)	37·012	43·54
c		h m 2 3	° ′ + 16 41
Oct. 25	IV	s 13·912	″ 54·41
Nov. 5	I	·879	54·33
13	III	·889	54·41
Dec. 29	II	·884	54·36
1888·88	(4)	13·891	54·38
d		h m 2 3	° ′ + 19 49
Nov. 11[1]	I	s 29·867	″ 1·98
Dec. 6	II	·884	1·46
Jan. 9[2]	IV	·848	1·48
10	III	·935	0·87
1888·96	(4)	29·883	1·45

Date 1888–9	Pos.	R.A.	Dec.
e		h m 2 4	° ′ + 18 58
Oct. 24	II	s 25·055	″ 18·10
Nov. 12	I	·068	17·81
Dec. 4	IV	·062	17·67
14	III	·088	17·58
1888·90	(4)	25·068	17·79
f		h m 2 5	° ′ + 20 50
Oct. 19	II	s 6·038	″ 56·52
28	IV	·024	57·08
Nov. 7	I	·060	56·93
9	III	·067	57·22
1888·84	(4)	6·047	56·94
h		h m 2 6	° ′ + 20 41
Nov. 5	I	s 31·823	″ 2·99
13	III	·811	3·52
Dec. 1	II	·857	3·13
4	IV	·841	3·76
10[1]	I	·860	3·46
13	III	·891	3·56
29	II	·863	3·09
Jan. 4	IV	·857	3·62
1888·93	(8)	31·850	3·39
i		h m 2 7	° ′ + 19 5
Oct. 25	IV	s 38·870	″ 21·79
Nov. 20	II	·892	21·17
Dec. 7	III	·869	22·42
8	I	·871	21·92
1888·90	(4)	38·876	21·82

Date 1888–9	Pos.	R.A.	Dec.
k		h m 2 8	° ′ + 22 6
Oct. 24	II	s 39·590	″ 24·95
Nov. 5	I	·620	25·01
13	III	·628	25·15
Dec. 4	IV	·598	25·59
1888·87	(4)	39·609	25·17
l		h m 2 11	° ′ + 22 8
Oct. 19	II	s 26·061	″ 33·79
28	IV	·091	33·44
Nov. 14[1]	III	·108	33·79
Dec. 8	I	·081	33·41
14	III	·117	33·47
1888·88	(5)	26·092	33·58
m		h m 2 11	° ′ + 19 22
Nov. 5	I	s 53·703	″ 57·02
13	III	·713	57·21
Dec. 1	II	·744	57·30
4	IV	·694	57·34
10[1]	I	·665	57·17
13	III	·747	57·36
29	II	·731	57·81
Jan. 4	IV	·730	57·53
1888·93	(8)	53·716	57·34
n		h m 2 12	° ′ + 21 22
Oct. 25	IV	s 16·859	″ 48·49
Nov. 12	I	·875	48·82
20	II	·881	48·85
Jan. 10	III	·871	48·90
1888·90	(4)	16·871	48·77

Digitized by Google

Date 1888–9	Pos.	R.A.	Dec.
o		h m 2 12	° ′ + 22 39
		s	″
Oct. 24	II	38·428	2·60
Nov. 11[1]	I	·455	2·11
Dec. 7	III	·478	1·93
Jan. 9	IV	·467	2·43
1888·91	(4)	38·457	2·27
q		h m 2 14	° ′ + 22 54
		s	″
Oct. 19	II	53·853	47·26
28	IV	·882	47·55
Nov. 5	I	·880	47·44
9	III	·897	47·37
13	III	·911	47·20
Dec. 4	IV	·894	47·60
28	I	·903	47·58
29	II	·902	47·41
1888·89	(8)	53·890	47·43
r		h m 2 17	° ′ + 20 54
		s	″
Oct. 24	II	29·938	16·17
25	IV	·981	16·80
Nov. 5	I	·952	16·19
11[3]	I	·960	16·34
13	III	·936	16·45
Dec. 1	II	·973	16·08
4	IV	·946	16·15
7	III	·986	16·52
1888·88	(8)	29·959	16·34
s		h m 2 20	° ′ + 22 22
		s	″
Oct. 19	I	37·862	26·68
Nov. 5	II	·893	27·45
9	III	·895	27·16
Dec. 4	IV	·895	26·78
1888·86	(4)	37·886	27·02

Date 1888–9	Pos.	R.A.	Dec.
t		h m 2 21	° ′ + 24 7
		s	″
Nov. 7	I	53·329	43·18
13	III	·385	43·46
Dec. 6	II	·375	43·34
Jan. 9[1]	IV	·361	44·60
1888·92	(4)	53·363	43·65
u		h m 2 22	° ′ + 22 58
		s	″
Nov. 11[1]	I	50·489	5·96
14[1]	III	·527	6·17
20	II	·535	6·30
Dec. 5	IV	·523	5·59
1888·89	(4)	50·519	6·00
v		h m 2 22	° ′ + 21 5
		s	″
Nov. 5	I	57·645	37·29
Dec. 1	II	·664	37·13
4	IV	·657	37·77
7	III	·677	37·83
1888·91	(4)	57·661	37·50
w		h m 2 24	° ′ + 24 44
		s	″
Oct. 28	IV	5·787	17·44
Nov. 9	III	·760	17·06
12	I	·800	17·09
13	III	·806	16·83
Dec. 6	II	·791	16·85
28	I	·857	17·40
29	II	·816	16·74
Jan. 4	IV	·815	17·42
1888·92	(8)	5·804	17·10

Date 1888–9	Pos.	R.A.	Dec.
x		h m 2 28	° ′ + 24 24
		s	″
Oct. 25	IV	11·833	3·88
Nov. 5	I	·813	3·32
9	III	·840	3·48
Dec. 1	II	·792	4·10
4	IV	·803	4·03
13	III	·850	3·17
28	I	·867	4·15
29	II	·840	3·21
1888·91	(8)	11·830	3·67
y		h m 2 28	° ′ + 22 28
		s	″
Oct. 28	IV	16·614	34·79
Nov. 7	I	·615	34·55
13	III	·652	33·98
20	II	·629	34·19
1888·86	(4)	16·628	34·38
z		h m 2 30	° ′ + 22 33
		s	″
Nov. 5	I	18·673	48·72
14[1]	III	·694	49·08
Dec. 4	IV	·649	48·54
6	II	·676	48·93
1888·90	(4)	18·673	48·82
α		h m 2 30	° ′ + 24 9
		s	″
Oct. 24	II	32·943	33·29
Nov. 11[1]	I	·921	32·84
13	III	·927	32·97
Dec. 5	IV	·987	33·41
1888·87	(4)	32·945	33·13
β		h m 2 31	° ′ + 22 38
		s	″
Oct. 19	II	25·268	33·46
25	IV	·297	33·50
Nov. 9	III	·304	33·57
12	I	·332	33·23
1888·84	(4)	25·300	33·44

[1] Bad images. [2] Very bad images. [3] Star faint and diffused.

Digitized by Google

The observations were made by Dr. Küstner with the large Meridian-Circle. The aperture of the $7\frac{1}{2}$-inch object-glass was diminished to $0^m{\cdot}140$, by which means the images were considerably improved. The power used was 210 ; the transits were registered generally over 15, occasionally over 20 or 25 wires, and four microscopes were read upon 8, sometimes 12 divisions.

The positions were originally derived from clock-corrections and equator-points determined with the star-ephemeris of the *Berliner Jahrbuch*, using only the Pulkowa Hauptsterne occurring in the first four hours of R.A. and from the equator to Dec. + 40°.

The new clock-corrections and equator-points were determined, using indiscriminately the same " Hauptsterne " and the means determined for all of the *Iris* stars themselves in the first approximation. The following differences were found to reach or exceed $0^s{\cdot}01$ or $0''{\cdot}1$ and applied as corrections to the positions derived from the *Berliner Jahrbuch* stars alone :—

1888–9	$\Delta\alpha$	No. Iris stars	1888–9	$\Delta\delta$	No. Iris stars
	s			″	
October 19	+ 0·018	6	October 25	— 0·10	7
November 5	+ 0·012	11	28	— 0·12	6
December 28	— 0·015	3	November 5	+ 0·20	11
29	— 0·014	7	13	+ 0·12	11
January 10	— 0·020	3	December 28	— 0·10	3
			January 4	— 0·26	4
			9	— 0·17	3

The places thus corrected are given in the preceding table. On all the other days the differences between the zero-points of the first and the second approximations were below the limits $0^s{\cdot}01$ and $0''{\cdot}1$ and were disregarded. The new means for the *Iris* stars then formed, as given in the preceding table, were found not to disagree with the preliminary means in any case by more than $0^s{\cdot}007$ or $0''{\cdot}07$; it was, therefore, unnecessary to go through a third approximation.

From the differences between the separate determinations and their means the mean error of an observation is found for R.A. $\pm\ 0^s{\cdot}024$, for Dec. $\pm\ 0''{\cdot}30$, including such systematic difference as might exist between the four different " positions of the Instrument " over which the observations were quite uniformly distributed. The designations used in the table mean :—

Position I : Clamp East. Axis pressed against East pillar. Circle read, A.
" II : " West " " " " " " B.
" III : " East " " " West " " B.
" IV : " West " " " " " " A.

Digitized by Google

No corrections for division-errors were applied, but different parts of the divisions were thus used for each of the four positions, and every mean result for Declination depends, therefore, upon at least 32 lines of the divisions.

Comparing the observations in the different positions with their means, the mean differences between the separate positions were found to be very small and were disregarded. The reductions to the mean of the four positions would be the following:—

		s	″
Position	I.	+ 0·007	+ 0·07
„	II.	+ 0·001	+ 0·06
„	III.	— 0·008	+ 0·01
„	IV.	0·000	— 0·14

From experiments upon the influence of magnitude upon the observations of transits, details of which will afterwards be given in a separate chapter, Dr. Küstner has derived the following table of corrections to his Right Ascensions:—

Magnitude	Δα	Magnitude	Δα
	s		s
5·5	— 0·001	7·5	— 0·013
6·0	— 0·003	8·0	— 0·018
6·5	— 0·006	8·5	— 0·022
7·0	— 0·009	9·0	— 0·027

These corrections were not applied to the places as communicated, but as they appeared well established, it was thought advisable to apply them at once before entering into any further discussions; and, with the magnitudes of the *Bonner Durchmusterung* for argument, the following corrections taken from this table were applied to the R.A. means given above:—

Star	Δα	Star	Δα	Star	Δα	Star	Δα	Star	Δα
	s		s		s		s		s
a	— 0·015	f	— 0·013	m	— 0·003	s	— 0·016	x	— 0·020
b	— 0·011	h	— 0·001	n	— 0·018	t	— 0·023	y	— 0·019
c	— 0·008	i	— 0·011	o	— 0·003	u	— 0·003	z	— 0·014
d	— 0·013	k	— 0·016	q	— 0·016	v	— 0·013	α	— 0·009
e	— 0·003	l	— 0·020	r	— 0·022	w	— 0·004	β	— 0·020

Digitized by Google

CAPE OF GOOD HOPE.

Transit-Circle. Observers, Maclear and Cox. — Mean R.A. and Dec. 1888·0 communicated by Dr. Gill.

Date, 1888		Observer	R.A.	Dec.
a			s	′
Oct.	10	C	3·92	26·50
	15	M	3·96	24·70
	16	C	3·94	25·50
Nov.	2	M	3·63	28·59
	13	C	4·03	26·37
	14	M	3·96	27·12
b				
Oct.	18	C	36·93	44·49
	22	C	36·75	44·37
	29	M	37·21	43·69
Nov.	12	M	37·09	45·36
Dec.	13	M	36·84	43·88
	14	C	37·17	44·40
	23	M	37·00	45·20
c				
Oct.	16	C	13·78	55·18
	26	C	13·87	54·73
	31	M	13·92	54·39
Nov.	6	M	14·05	54·59
Dec.	22	C	14·01	55·17
	24	M	13·88	54·07
	27	C	13·91	55·96
d				
Oct.	30	C	29·97	3·65
Nov.	7	C	29·93	2·62
Dec.	16	M	30·15	3·06
	17		...	2·28
	18	C	29·88	0·68
	21	M	29·85	2·51
e				
Oct.	10	C	25·14	17·91
	15	M	25·16	20·05
Nov.	1	C	25·04	19·20
Dec.	19	M	25·12	18·46
	23	M	25·13	19·61
f				
Oct.	18	C	6·06	57·63
	22	C	5·92	58·03
Nov.	2	M	5·96	58·35
Dec.	3	M	6·10	57·95
g				
Nov.	5	C	*2·62	25·91
	7	C	*2·79	27·72
	24	M	2·95	27·51
	27	M	3·03	28·00
Dec.	10	C	*2·75	25·83
	16	M	2·95	...
h				
Oct.	16	C	31·77	3·54
	29	M	31·80	3·42
Nov.	23	C	31·95	3·62
	29	M	31·71	4·03
	30	C	31·82	4·41
Dec.	7	M	32·00	3·06
i				
Oct.	26	C	38·87	22·48
	30	C	38·90	23·25
	31	M	38·97	23·73
Nov.	20	M	38·81	22·28
Dec.	5	M	38·89	22·64
	8	C	38·94	22·99
k				
Oct.	10	C	39·66	24·37
	15	M	39·80	26·41
	18	C	39·44	26·06
	22	C	39·53	26·11
Nov.	22	M	39·67	27·03
Dec.	11	M	39·70	25·41
l				
Oct.	31	M	26·27	34·57
Nov.	2	M	26·16	33·67
	13	C	*25·91	34·88
	17	C	26·20	33·96
	19	C	25·98	34·29
Dec.	3	M	26·23	34·34
m				
Oct.	16	C	53·59	56·76
	26	C	53·73	58·60
	29	M	53·83	57·67
Nov.	24	M	53·75	58·58
	30	C	53·79	58·00
Dec.	7	M	53·81	57·59

Digitized by Google

Date, 1888	Observer	R.A.	Dec.
n			
		s	′
Oct. 30	C	*16·71	49·46
Nov. 20	M	16·80	50·24
23	C	16·86	49·79
27	M	16·89	50·61
Dec. 10	C	*16·68	49·47
16	M	16·92	50·88
23	M	16·99	...
o			
Oct. 10	C	38·64	1·66
15	M	38·55	3·89
22	C	38·43	4·32
Nov. 29	M	38·45	3·58
Dec. 14	C	38·65	3·92
19	M	38·62	3·32
p			
Nov. 7	C	*17·86	35·95
22	M	18·07	...
Dec. 5	M	18·00	36·38
7	M	18·08	34·93
8	C	*17·69	35·32
18	C	*17·97	34·92
21	M	18·01	36·88
q			
Nov. 12	M	53·85	48·56
19	C	53·91	50·60
30	C	53·94	48·34
Dec. 3	M	54·07	48·46
11	M	53·86	47·08
22	C	53·85	48·62
r			
Oct. 10	C	29·99	15·03
16	C	29·99	16·21
Nov. 20	M	29·99	17·66
24	M	30·08	17·45
27	M	30·14	16·20
Dec. 14	C	29·99	18·01

Date, 1888	Observer	R.A.	Dec.
s			
		s	′
Oct. 15	M	38·04	27·97
16	C	37·93	27·11
22	C	37·60	27·22
Nov. 12	M	38·04	29·76
29	M	37·93	27·82
Dec. 14	C	37·76	28·61
t			
Nov. 2	M	53·34	46·99
5	C	53·17	44·40
7	C	53·27	45·16
22	M	53·33	44·89
Dec. 3	M	53·58	45·18
8	C	53·16	45·58
u			
Oct. 31	M	50·57	6·24
Nov. 1	C	50·43	6·78
6	M	50·75	6·92
23	C	50·51	6·72
Dec. 7	M	50·85	7·29
18	C	50·43	5·26
v			
Oct. 29	M	57·78	37·37
Nov. 13	C	57·80	38·70
19	C	57·59	39·15
20	M	57·67	38·49
Dec. 5	M	57·74	38·74
10	C	57·60	38·77
w			
Oct. 15	M	5·93	18·67
30	C	5·69	18·07
Nov. 24	M	5·88	17·68
27	M	5·95	17·98
30	C	5·87	18·44
Dec. 22	C	5·77	18·96

Date, 1888	Observer	R.A.	Dec.
x			
		s	′
Oct. 31	M	11·91	5·06
Nov. 5	C	11·60	4·12
12	M	11·80	2·67
19	C	11·70	4·55
29	M	11·82	6·63
Dec. 8	C	11·64	5·33
y			
Oct. 30	C	16·54	36·49
Nov. 1	C	16·52	...
2	M	16·69	35·71
22	M	16·61	34·70
23	C	16·55	35·48
Dec. 3	M	16·86	34·02
18	C	16·76	34·15
z			
Nov. 13	C	18·63	49·72
19	C	18·58	49·76
20	M	18·71	50·18
27	M	18·65	50·29
Dec. 5	M	18·61	50·45
27	C	18·80	49·86
α			
Oct. 22	C	32·82	34·22
26	C	33·13	33·42
29	M	33·03	33·08
Nov. 24	M	33·00	33·72
Dec. 7	M	33·15	33·06
β			
Oct. 31	M	25·41	34·80
Nov. 2	M	25·28	34·26
5	C	*25·23	34·41
7	C	*25·18	34·01
12	M	25·21	34·55
Dec. 8	C	*25·07	34·47

Digitized by Google

The transits were observed by eye and ear, and a reversible eyepiece was used systematically alternating with the apparent direction of the star's motion in every transit of the fundamental stars as well as of the *Iris* stars, except in those cases where an asterisk is placed opposite an observation in the above table. In these cases, on account of cloud or mist, it was necessary, in the observations of the small stars, to dispense with the reversing prism and use a plain eyepiece.

The Right Ascensions depend upon the *Berliner Jahrbuch* Catalogue, the Declinations upon the observed nadir-points and the assumed co-latitude. Cox's Right Ascensions however appear to be considerably smaller than Maclear's, and with the plain eyepiece transits appear to have been observed still much earlier by the former observer. Allowing, provisionally, for a difference of $0^s{\cdot}10$ between the two observers, and applying besides the correction $+0^s{\cdot}12$ to all Right Ascensions determined by Cox with the plain eyepiece, means were taken, the deviations from which come out, in the mean of the stars observed on each separate evening, as follows:—

Observer—Maclear.								Observer—Cox. (Obs. with plain eyepiece corr. $+0^s{\cdot}12$)							
1888	$\Delta\alpha$	$\Delta\delta$	Stars	1888	$\Delta\alpha$	$\Delta\delta$	Stars	1888	$\Delta\alpha$	$\Delta\delta$	Stars	1888	$\Delta\alpha$	$\Delta\delta$	Stars
	s	″			s	″			s	″			s	″	
Oct. 15	+0·08	+0·07	6	Dec. 3	+0·18	− 0·34	4	Oct. 10	+0·02	−1·23	5	Nov. 23	− 0·02	+0·06	4
29	+0·07	−0·57	5	5	−0·00	+ 0·25	4	16	−0·05	−0·57	6	30	+ 0·02	+0·18	4
31	+0·08	+0·21	6	7	+0·14	− 0·28	5	18	−0·07	−0·06	3	Dec. 8	− 0·10	+0·11	5
Nov 2	−0·04	+0·79	6	11	+0·01	− 1·01	2	22	−0·17	+0·14	6	10	− 0·07	−0·51	3
6	+0·14	+0·05	2	13	−0·15	− 0·60	1	26	0·00	+0·03	4	14	+ 0·03	+0·54	4
12	+0·03	+0·12	5	16	+0·07	+ 0·70	3, 2	30	−0·08	+0·42	5	18	− 0·01	−1·20	4
14	+0·05	+0·66	1	19	+0·03	− 0·36	2	Nov. 1	−0·12	+0·20	3, 2	22	− 0·02	+0·32	3
20	−0·03	+0·04	5	21	−0·04	+ 0·60	2	5	−0·10	−0·67	4	27	+ 0·06	+0·45	2
22	+0·02	+0·09	4	23	+0·05	+ 0·64	3, 2	7	−0·01	+0·10	5				
24	+0·02	+0·30	5	24	−0·04	− 0·80	1	13	+0·02	+0·09	4				
27	+0·07	+0·18	5					17	+0·05	−0·32	1				
29	−0·03	+0·53	4	Mean	+0·033	+ 0·06		19	−0·08	+0·43	5	Mean	− 0·035	−0·07	

Although many of these separate mean corrections are little more than computed quantities, yet the series contains many instances of large daily deviations, which show that a considerable variation has existed in the personal equation for magnitude with both of the observers, and it was considered safest therefore to use throughout the numbers of the preceding table to correct the positions given above, whenever more than one star was observed. For the four days with one star only means between the individual numbers of the table and the observer's general mean deviation were deducted from the positions; the Right Ascensions taken with the plain eyepiece were increased by $0^s{\cdot}12$ as before. The following new means were then found and

Digitized by Google

assumed as definitive results of the observations, affected with the mean of the personal equations of the two observers :—

Star	R.A.	Dec.	Obs.	Star	R.A.	Dec.	Obs.	Star	R.A.	Dec.	Obs.
	h m s	° ′ ″			h m s	° ′ ″			h m s	° ′ ″	
a	2 0 3·896	+20 3 26·55	6	k	2 8 39·652	+22 6 26·23	6	t	2 21 53·317	+24 7 45·35	6
b	1 37·015	17 29 44·41	7	l	11 26·116	22 8 34·12	6	u	22 50·554	22 58 6·70	6
c	3 13·886	16 41 54·85	7	m	11 53·717	19 22 58·02	6	v	22 57·712	21 5 38·58	6
d	3 29·951	19 49 2·37	5, 6	n	12 16·871	21 22 49·93	7, 6	w	24 5·833	24 44 18·05	6
e	4 25·105	18 58 19·18	5	o	12 38·562	22 39 3·50	6	x	28 11·777	24 24 4·60	6
f	5 6·035	20 50 57·85	4	p	14 18·006	19 36 35·57	7, 6	y	28 16·657	22 28 35·12	7, 6
g	6 2·912	21 27 27·11	6, 5	q	14 53·889	22 54 48·66	6	z	30 18·657	22 33 49·80	6
h	6 31·821	20 41 3·79	6	r	17 30·021	20 54 16·88	6	α	30 33·014	24 9 33·57	5
i	7 38·919	19 5 22·72	6	s	20 37·902	22 22 27·94	6	β	31 25·312	22 38 34·31	6

The corrected observations compared with these means give the following numbers as mean errors of one observation :—

	s	′	
Maclear	±0·085	±0·81	from 82 and 81 obs.
Cox	±0·094	±0·69	„ 80 „ 78 „

DUBLIN.

The observations were made with the Meridian Circle of Dunsink Observatory by Mr. Rambaut between Sept. 5, 1888, and Jan. 10, 1889, and published at length in the *Monthly Notices*, March, 1889.

The observations being made in the two positions of the instrument, clamp E. and clamp W., the first point investigated was whether a systematic difference existed between the results of the two positions. The differences E.—W. for the separate stars were found as follows :—

Star's letter	No. in Duns. list	E.—W. Δα	E.—W. Δδ	Star's letter	No. in Duns. list	E.—W. Δα	E.—W. Δδ	Star's letter	No. in Duns. list	E.—W. Δα	E.—W. Δδ
		s	′			s	′			s	′
a′	1	—0·070	— 0·87	k	11	—0·015	+ 0·05	t	21	—0·030	+ 1·50
a	2	— ·023	— 0·47	l	12	— ·007	+ 1·25	u	22	— ·077	+ 0·28
b	3	— ·027	+ 0·84	m	13	+ ·015	— 0·35	v	23	+ ·065	+ 0·27
c	4	— ·045	— 1·10	n	14	+ ·080	— 0·05	w	24	+ ·024	+ 0·66
d	5	— ·030	— 1·60	o	15	— ·065	— 1·10	w′	25	+ ·025	— 0·15
e	6	+ ·017	0·00	p	16	+ ·053	— 0·22	x	26	+ ·020	+ 0·40
f	7	— ·040	— 0·65	q	17	— ·055	+ 0·15	y	27	+ ·005	+ 0·65
g	8	+ ·030	— 1·25	r	18	+ ·035	+ 0·57	z	28	+ ·023	+ 0·30
h	9	— ·090	— 1·28	r′	19	+ ·090	— 1·10	α	29	— ·005	+ 0·40
i	10	— ·100	— 1·00	s	20	+ ·007	— 0·13	β	30	+ ·005	+ 0·62

Digitized by Google

The general mean is E. − W. = $-0^{s}\cdot006 - 0''\cdot11$ or nearly insensible, a result which was probable beforehand, as the positions depend upon zero-points determined from stars not far from the zone, whose places were taken from the *Berliner Jahrbuch*, but the long continuations of signs make the differences look systematic. For the three groups of 10 stars each the means E. − W. are :—

s	″		h m	° ′
−0·038	−0·74	for	2 3·6	+19 17
+0·014	−0·09	„	15·1	21 49
+0·005	+0·49	„	26·6	23 6

The observations however being nearly uniformly distributed over the two positions, these differences were neglected, and day corrections derived from a comparison of the separate results with the means as given in the *Monthly Notices* ; and simple means were taken from the corrected observations without regard to the position of the instrument. The following tables contain the adopted results :—

Day Corrections of Observations.

Date	R.A.	Dec.	No. St.	Date	R.A.	Dec.	No. St.	Date	R.A.	Dec.	No. St.	Date	R.A.	Dec.	No. St.
	s	″			s	″			s	″			s	″	
Sept. 5	0·00	+0·1	6	Oct. 13	−0·01	−0·2	5	Nov. 30	−0·04	+0·3	3	Dec. 26	0·00	+0·2	5
7	−0·03	−0·9	5	14	+0·03	+0·2	5	Dec. 3	−0·05	+0·1	4	27	+0·01	+0·4	4
12	−0·02	−0·3	5	20	+0·03	+0·2	5	8	−0·04	−0·2	3	28	−0·01	+0·0	5
16	−0·03	−0·6	5, 6	22	−0·05	−0·1	4	9	+0·07	+0·1	4	29	+0·02	+0·5	5
26	+0·08	+0·1	3, 4	30	−0·01	−0·1	5	11	0·00	+0·4	5	30	+0·03	+0·2	5
Oct. 1	−0·01	−0·7	5	Nov. 20	0·00	0·0	5, 4	16	+0·01	0·0	5	Jan. 3	+0·00	+0·2	2
3	−0·09	+0·0	3	25	0·00	+0·1	4	20	+0·02	+0·1	4	5	−0·01	0·0	3
4	+0·02	−0·1	4	27	+0·04	−0·2	4	24	+0·01	+0·2	6	10	−0·04	+0·6	4

The mean daily deviations generally being small, the isolated observation of star b, November 16, was used without change.

Mean Places 1888·0.

Star	R.A.	Dec.	Obs.	Star	R.A.	Dec.	Obs.	Star	R.A.	Dec.	Obs.
	h m s	° ′ ″			h m s	° ′ ″			h m s	° ′ ″	
a′	1 57 33·981	+17 42 52·44	7	k	2 8 39·614	+22 6 25·87	6	t	2 21 53·290	+24 7 44·62	4
a	2 0 3·918	20 3 25·83	6	l	11 26·130	22 8 34·75	4	u	22 50·556	22 58 6·46	5
b	1 37·042	17 29 43·72	6, 5	m	11 53·654	19 22 57·02	5	v	22 57·672	21 5 38·20	5
c	3 13·880	16 41 55·22	4	n	12 16·857	21 22 49·60	4	w	24 5·787	24 44 17·77	6
d	3 29·892	19 49 2·52	4	o	12 38·458	22 39 2·88	5	w′	26 1·665	21 50 17·15	4
e	4 25·064	18 58 18·17	5, 4	p	14 17·928	19 36 35·74	5	x	28 11·857	24 24 3·42	4
f	5 6·037	20 50 57·10	4	q	14 53·905	22 54 47·52	4	y	28 16·622	22 28 34·95	4
g	6 2·897	21 27 26·05	4	r	17 29·950	20 54 17·20	4, 5	z	30 18·667	22 33 49·58	6
h	6 31·842	20 41 4·16	4, 5	r′	19 27·345	24 39 11·10	4	α	30 32·970	24 9 33·32	5
i	7 38·895	19 5 22·40	4	s	20 37·978	22 22 27·30	5	β	31 25·318	22 38 33·86	5

The mean error of a corrected observation is found: in R.A., from 142 observations, $\pm 0^{s}\cdot044$; in Dec., from 142 observations, $\pm 0''\cdot66$.

Digitized by Google

GREENWICH.

The observations are published in the annual volumes of the Royal Observatory for 1888, 1889, and 1890. A slightly different value of the R – D correction was used for part of the positions communicated in advance by the Astronomer Royal, the correction used provisionally in 1888 being used also for the later observations, thus making the N.P.D. resulting from observations of 1889 and 1890 smaller by 0″·06 than they were afterwards published.

Taking means from the communicated individual results, and comparing with them the separate determinations, the following mean deviations were found for the separate days :—

1888	Δα	Δδ	No. St.	Obs.	1888	Δα	Δδ	No. St.	Obs.	1888	Δα	Δδ	No. St.	Obs.	1889	Δα	Δδ	No. St.	Obs.
	s	″				s	″				s	″				s	″		
Oct. 13	−0·09	−0·38	2	EP	Oct. 30	+0·02	+0·93	2	T	Dec. 1	−0·01	−0·49	8	T	Oct. 12	−0·02	−0·07	6	L
15	−0·01	+0·16	3	H	Nov. 6	−0·02	+0·28	1	AD	5	+0·04	+0·49	5	H	31	−0·06	+0·32	2	WR
17	−0·04	−0·05	5	F	13	−0·04	−0·28	1	H	6	+0·06	+0·51	7	T	Nov. 27	−0·14	−0·47	1	L
19	+0·02	−1·00	3, 2	AW	17	+0·02	−0·44	3	H	7	−0·03	−0·21	6, 7	L	Dec. 3	−0·02	+0·58	1	H
20	+0·07	−0·80	3	AD	20	+0·04	+0·36	6	RP	11	−0·01	+0·73	4, 3	L	20	+0·03	−0·10	1	R
22	−0·01	+1·08	3	T	21	−0·01	+0·17	3	H	31	−0·02	−0·14	4	T	24	+0·03	−0·79	1	HF
23	−0·02	+0·97	5	H	26	−0·05	+0·18	5	F	1889					31	+0·02	+0·01	3	T
26	−0·02	−0·72	5	AP	27	+0·04	−1·24	5	T	Jan. 1	+0·06	+0·50	4	L	1890				
27	−0·01	+0·14	4	SD	28	−0·05	−0·02	1	L	8	+0·00	−0·78	4	T	Jan. 20	+0·01	+0·54	5	L

The means used, though depending upon the observations of no less than 13 different observers, can be assumed to be affected very nearly with the mean personality of the four regular observers AD, T, L, H, for which the means of the daily deviations become :—

	s	″	
Downing	+ 0·025	− 0·26	from 2 days
Thackeray	+ 0·013	− 0·02	„ 8 „
Lewis	− 0·027	+ 0·14	„ 7 „
Hollis	− 0·006	+ 0·24	„ 7 „

Subtracting the Δα and Δδ as found for the different days, whenever several stars were observed, and using the isolated observations on seven days without corrections, new means for the star-places at the beginning of 1888 were formed, which are given in the following table. From the differences with them the mean error of one reduced observation is found from 120 observations of R.A. and 119 of Dec., for R.A. ±0ˢ·059, for Dec. ±0″·55.

Digitized by Google

Star	R.A.	Dec.	Obs.	Star.	R.A.	Dec.	Obs.	Star.	R.A.	Dec.	Obs.
	h m s	° ′ ″			h m s	° ′ ″			h m s	° ′ ″	
a′	1 57 33·983	+17 42 52·30	7	i	2 7 38·916	+19 5 22·12	5	s	2 20 37·930	+22 22 26·48	5
a	2 0 3·908	20 3 25·07	6	k	8 39·572	22 6 24·72	5	u	22 50·550	22 58 5·40	4
b	1 37·023	17 29 43·83	7	l	11 26·140	22 8 33·21	4	v	22 57·690	21 5 37·40	4
c	3 13·887	16 41 54·11	3	m	11 53·745	19 22 55·83	2	w	24 5·765	24 44 17·21	5
d	3 29·900	19 49 1·46	5	n	12 16·855	21 22 48·50	4	w′	26 1·685	21 50 15·93	4
e	4 25·087	18 58 16·59	3	o	12 38·445	22 39 2·21	4	x	28 11·890	24 24 3·11	4
f	5 6·031	20 50 56·39	7, 6	p	14 18·006	19 36 34·40	5, 4	y	28 16·630	22 28 33·59	4
g	6 2·853	21 27 26·05	3	r	17 30·038	20 54 16·24	6	z	30 18·680	22 33 48·36	3, 4
h	6 31·795	20 41 3·04	2	r′	19 27·433	24 39 10·44	4	β	31 25·376	22 38 33·26	5

LEIDEN.

The following results of observations made from September 1888 to January 1889 with the Martins Meridian-Circle by the assistants, E. F. van de Sande Bakhuyzen and Wilterdink, were communicated by the director, Professor H. G. van de Sande Bakhuyzen.

Mean Places 1888·0.

Date	Position	Observer	R.A.	Dec.
		a′	s	″
Sept. 11	W	B	33·957	52·89
20	W	B	34·025	51·87
21	W	W	·010	52·57
Oct. 1	E	W	·038	53·37
		a		
Sept. 11	W	B	3·913	25·28
18	W	B	·881	26·19
22	W	B	·872	26·06
Oct. 18	E	B	·859	25·67
19	E	W	·921	25·58
		b		
Sept. 11	W	B	...	44·22
20	W	B	37·029	44·38
21	W	W	·028	43·84
Oct. 1	E	W	·086	45·02
Dec. 13	E	B	·005	45·22
		c		
Sept. 12	W	B	13·884	55·56
25	E	W	·942	54·52
Oct. 18	E	B	·897	55·18
27	E	B	·855	54·71
Dec. 20	E	B	·857	54·73
		d		
Sept. 18	W	B	29·861	2·01
22	W	B	·873	1·95
Oct. 19	E	W	·880	2·11
		e		
Sept. 20	W	B	25·065	18·18
27	E	W	·110	17·70
Jan. 5	E	B	·097	17·84
6	E	W	·151	17·78
		f		
Sept. 21	W	W	6·071	57·03
Oct. 1	E	W	·046	57·01
Dec. 13	E	B	·055	57·79
		g		
Sept. 22	W	B	2·885	26·76
25	E	W	·895	26·53
		h		
Sept. 11	W	B	31·872	4·90
12	W	B	·903	3·92
Oct. 18	E	B	·840	4·07
19	E	W	·891	3·75
27	E	B	·834	3·53
Dec. 20	E	B	·897	4·13
Jan. 5	E	B	·886	4·18

Digitized by Google

Date	Position	Observer	R.A.	Dec.
		i	s	″
Sept. 18	W	B	38·859	22·78
27	E	W	·866	22·28
Oct. 1	E	W	·841	22·26
Dec. 13	E	B	·886	22·79
Jan. 1	E	B	·916	21·19
		k		
Sept. 20	W	B	39·595	25·34
21	W	W	·595	24·96
22	W	B	·575	24·99
Oct. 19	E	W	·629	25·05
Dec. 20	E	B	·659	25·83
		l		
Sept. 18	W	B	26·099	34·24
25	E	W	·079	35·01
Oct. 1	E	W	·093	33·94
Dec. 20	E	B	·151	34·18
		m		
Sept. 11	W	B	53·750	57·48
12	W	B	·712	57·65
Oct. 18	E	B	·717	58·14
27	E	B	·727	57·26
Jan. 1	E	B	·737	57·83
		n		
Sept. 20	W	B	16·808	49·32
27	E	W	·836	49·64
Oct. 19	E	W	·868	48·64
Jan. 6	E	W	·843	48·82
		o		
Sept. 21	W	W	38·483	2·21
22	W	B	·510	2·59
Dec. 13	E	B	·476	3·71
Jan. 5	E	B	·517	2·36
		p		
Sept. 18	W	B	17·943	35·68
25	E	W	·930	35·23
27	E	W	·961	35·74
Oct. 1	E	W	·930	35·67

Date	Position	Observer	R.A.	Dec.
		q	s	″
Sept. 11	W	B	53·852	47·97
12	W	B	·916	48·04
20	W	B	·888	47·94
Oct. 18	E	B	·895	47·48
19	E	W	·903	47·60
27	E	B	·915	47·18
		r		
Sept. 18	W	B	29·976	17·05
22	W	B	·981	17·35
25	E	W	·980	16·77
Oct. 1	E	W	·954	17·61
18	E	B	·954	16·77
27	E	B	30·001	15·89
Dec. 13	E	B	·036	16·82
Jan. 1	E	B	29·982	16·81
		r′		
Sept. 11	W	B	27·380	11·44
12	W	B	·405	10·52
27	E	W	·401	11·30
		s		
Sept. 18	W	B	37·901	27·24
21	W	W	·911	26·22
25	E	W	·819	27·33
Oct. 18	E	B	·903	26·90
Dec. 13	E	B	·937	27·40
		t		
Sept. 20	W	B	53·333	44·62
22	W	B	·331	44·83
Oct. 1	E	W	·349	44·37
Dec. 20	E	B	·318	44·95
Jan. 1	E	B	·352	45·04
		u		
Sept. 11	W	B	50·539	6·67
27	E	W	·512	6·20
Oct. 19	E	W	·567	5·60
Dec. 13	E	B	·545	7·70
		v		
Sept. 12	W	B	57·664	37·63
25	E	W	·638	37·59
Oct. 18	E	B	·687	37·89
Jan. 5	E	B	·692	37·36
6	E	W	·655	37·84

Date	Position	Observer	R.A.	Dec.
		w	s	″
Sept. 18	W	B	5·764	16·85
21	W	W	·775	16·75
Oct. 1	E	W	·777	17·60
27	E	B	·819	17·40
Dec. 20	E	B	·786	17·34
Jan. 1	E	B	·868	16·86
		w′		
Sept. 12	W	B	1·679	16·63
20	W	B	·671	16·99
25	E	W	·626	16·78
		x		
Sept. 18	W	B	11·841	4·51
22	W	B	·796	4·56
27	E	W	·744	3·52
Oct. 27	E	B	·867	4·39
Dec. 20	E	B	·838	4·43
		y		
Sept. 11	W	B	16·601	35·41
21	W	W	·593	34·49
Oct. 1	E	W	·605	34·22
Dec. 13	E	B	·682	35·27
Jan. 1	E	B	·639	34·06
		z		
Sept. 12	W	B	18·651	49·25
20	W	B	·667	49·68
Oct. 18	E	B	·650	49·65
19	E	W	·610	49·36
Jan. 5	E	B	·708	49·13
		α		
Sept. 18	W	B	32·922	33·31
25	E	W	·893	32·97
27	E	W	·939	33·12
Dec. 13	E	B	·964	34·27
Jan. 1	E	B	·934	33·05
		β		
Sept. 11	W	B	25·308	34·03
21	W	W	·271	34·13
22	W	B	·284	33·54
Oct. 1	E	W	·346	34·28
27	E	B	·319	33·29
Dec. 20	E	B	·327	34·33

Digitized by Google

The Right Ascensions depend on the Fundamental Catalogue of the *Berliner Jahrbuch*. The Declinations were determined by referring them to the Nadir, and with the adopted latitude 52° 9′ 20″·00. One circle was read—in the position clamp E., circle B ; in the position clamp W., circle A.

The Right Ascensions given above contain the correction for personal equation depending on the magnitude of the stars, taken from the following table with the B.D. magnitude as argument :—

m		
4·0 mean magnitude of clock stars,		correction $0^s·000$
5·5	$\Delta\alpha$ Bakh. $-0^s·018$	$\Delta\alpha$ Wi $-0^s·026$
6·5	$-0·039$	$-0·041$
7·5	$-0·065$	$-0·052$
8·5	$-0·096$	$-0·060$

The Declinations have been corrected for half the difference between the results clamp E. and clamp W., which was found rather great = 1″·16, but without sensible variation through the zone, nor was it dependent on magnitude ; + 0″·58, therefore, has been applied to all Declinations observed with clamp W., − 0″·58 for clamp E. The difference between the Declinations of W and of B was found insensible, and the same was found for the difference between the R.A. clamp E. and clamp W.

By comparing the individual results, thus corrected and incorporated in the table, with their means, the following values were found representing the corrections of the individual days to reduce them to the mean of all.

1888	Pos.	Obs.	$\Delta\alpha$	$\Delta\delta$	1888	Pos.	Obs.	$\Delta\alpha$	$\Delta\delta$	1888–9	Pos.	Obs.	$\Delta\alpha$	$\Delta\delta$
			s	″				s	″				s	″
Sept. 11	W	B	+0·015	−0·27	Sept. 25	E	W	+0·017	+0·04	Dec. 13	E	B	−0·017	−0·65
12	W	B	−0·008	+0·02	27	E	W	+0·009	+0·07	20	E	B	−0·011	−0·19
18	W	B	+0·006	−0·15	Oct. 1	E	W	+0·001	−0·13	Jan. 1	E	B	−0·022	+0·23
20	W	B	+0·008	−0·04	18	E	B	+0·008	−0·12	5	E	B	−0·020	+0·14
21	W	W	+0·011	+0·32	19	E	W	−0·012	+0·24	6	E	W	−0·012	+0·08
22	W	B	+0·011	−0·08	27	E	B	−0·006	+0·32					

Though these reductions are generally small, those for the Declinations at least appear sensibly to improve the consistency of the observations. From the deviations from the means Professor Bakhuyzen has computed the mean error of one observation

without day corrections : in R.A. $\pm 0^s·0296$, in Dec. $\pm 0''·456$
with ,, ,, ,, $0^s·0280$,, $0''·387$

The reductions, therefore, have been used throughout and the following mean results derived by Professor Bakhuyzen, which need no further discussion :—

Digitized by Google

Mean Results of Leiden Observations, 1888·0.

Star	R.A.	Dec.	Obs.	Star	R.A.	Dec.	Obs.	Star	R.A.	Dec.	Obs.
	h m s	° ′ ″			h m s	° ′ ″			h m s	° ′ ″	
a′	1 57 34·016	+17 42 52·65	4	k	2 8 39·612	+22 6 25·28	5	t	2 21 53·334	+24 17 44·72	5
a	2 0 3·890	20 3 25·74	5	l	11 26·109	22 8 34·24	4	u	22 50·540	22 58 6·39	4
b	1 37·037	17 29 44·38	4, 5	m	11 53·726	19 22 57·71	5	v	22 57·664	21 5 37·69	5
c	3 13·887	16 41 54·95	5	n	12 16·837	21 22 49·19	4	w	24 5·795	24 44 17·20	6
d	3 29·873	19 49 2·03	3	o	12 38·493	22 39 2·65	4	w′	26 1·664	21 50 16·81	3
e	4 25·102	18 58 17·94	4	p	14 17·949	19 36 35·54	4	x	28 11·819	24 24 4·28	5
f	5 6·056	20 50 57·12	3	q	14 53·896	22 54 47·73	6	y	28 16·622	22 28 34·59	5
g	6 2·904	21 27 26·63	2	r	17 29·983	20 54 16·82	8	z	30 18·652	22 33 49·46	5
h	6 31·870	20 41 4·09	7	r′	19 27·401	24 39 11·03	3	α	30 32·929	24 9 33·25	5
i	7 38·869	19 5 22·13	5	s	20 37·899	22 22 26·91	5	β	31 25·313	22 38 33·93	6

The greatest difference between these means and the means formed without day corrections is in R.A. $0^s·014$, or excluding star g with only two observations $0^s·008$, and in Dec. $0''·16$. In forming the mean results equal weight was given to all the observations—as in all the other series with those exceptions which are specially noted. Only the R.A. for star b Sept. 11, observed at five wires only, and differing much from the others, has been excluded.

LEIPZIG.

Observations were made from September to December, 1888, with the Martins Meridian-Circle of 6·4 inches aperture, by Dr. Schumann. The transits of the small stars were registered generally over eight or nine wires, and two microscopes read — one of these from October 19 till to the end of the series, except Oct. 28, by an assistant, Dr. Haenig — each on two lines of the divisions. Two or three fundamental stars were observed at the beginning of each evening's series, and two or three at the end, generally over a larger number of wires, and two pointings for Declination being made. On October 31, three fundamental stars could be got at the beginning only, the series being interrupted by clouds after the planet's transit. After November 10 only some isolated supplementary observations of the comparison stars were made, except on November 29, when one more full series was obtained ; for these isolated observations the number of fundamental stars generally was limited to three. Clock-errors and equator-points were derived with the *Berliner Jahrbuch* places, sometimes taking simple means from all of the stars, sometimes interpolating between the values for the beginning and the end of the series. No corrections for division-errors were applied.

Digitized by Google

The separate results communicated by Professor Bruns are contained in the following table of observed places for equinox 1888·0 :—

1888	Position	R.A.	Dec.
	a′	s	″
Sept. 20	E	34·06	51·9
21	E	·05	53·4
22	E	·07	52·3
Oct. 5	W	33·99	52·3
7	W	34·05	52·3
19	W	·05	52·9
	a		
Sept. 26	E	4·00	25·0
27	E	·08	25·8
30	E	·04	25·5
Oct. 7	W	·01	24·9
25	W	3·89	25·8
28	W	·99	25·7
	b		
Oct. 1	E	37·24	45·1
3	E	·18	44·2
25	W	·10	44·5
31	W	·07	43·5
Nov. 1	W	·04	44·6
8	E	36·99	44·2
	c		
Sept. 21	E	13·95 [1]	55·0
27	E	14·09	56·0
30	E	·00	54·2
Oct. 19	W	13·99	56·3
25	W	·96	55·1
Nov. 5	E	14·06	54·7
	d		
Sept. 21	E	29·92	0·7
Oct. 5	W	·93	0·9
7	W	·91	2·5
24	W	·83	1·3
Nov. 8 [3]	E	·84	1·7
	e		
Oct. 1	E	25·14	17·7
3	E	·16	17·0
25	W	·16 [2]	18·2
31	W	·13	17·1
Nov. 1	W	·07	17·6
8	E	·05	17·1
20	W	·09	17·3
	f		
Oct. 24	W	6·14 [1]	57·8
31	W	·11	56·6
Nov. 1	W	·00	57·5
8	E	5·97 [1]	57·9
9	E	6·04	57·3
10	E	·20	57·5
	g		
Sept. 20	E	2·96	26·7
21	E	·94	25·8
Oct. 28	W	3·00 [1]	25·9
31	W	2·89 [2]	27·2
Nov. 1	W	·83 [3]	26·9
5	E	·86	26·2
	h		
Sept. 22	E	31·92	4·0
26	E	·85	4·4
27	E	·89	4·3
30	E	·83	4·2
Oct. 5	W	·74 [1]	3·2
7	W	·82	3·2
19	W	·86	4·8
Nov. 29	W	·85	3·1
	i		
Oct. 1	E	38·90	23·3
3	E	39·02	22·2
24	W	38·95	22·8
25	W	·90	23·2
Nov. 8	E	·83	21·8
29	W	·94	22·3
	k		
Oct. 19	W	39·58	26·8
31	W	·59	24·9
Nov. 1	W	·62	26·4
5	E	·64	25·3
8	E	·52	25·9
Dec. 13	E	·52	25·0
	l		
Sept. 21	E	26·27	32·6
Oct. 19	W	·14	35·2
24	W	·06	34·1
28	W	·19	33·4
Nov. 5	E	·13	34·6
	m		
Sept. 22	E	53·76	57·3
26	E	·64	57·3
27	E	·75	58·0
30	E	·80	56·9
Oct. 5	W	·69	58·2
7	W	·77	56·9
31	W	·79	56·7
Nov. 1	W	·71	57·4
	n		
Oct. 1	E	16·95	50·1
3	E	17·05	48·8
24	W	16·88	49·3
25	W	·90	49·8
Nov. 11	E	17·03 [2]	49·1
12	E	16·90	48·0
30	W	·86	48·8
Dec. 6	E	·90	49·2
	o		
Oct. 31	W	38·51	1·8
Nov. 1	W	·47	2·9
8	E	·43	2·5
9	E	·64	2·3
10	E	·61	1·6
29	W	·58	2·6

[1] 4 wires. [2] 5 wires. [3] 2 wires.

Digitized by Google

1888	Position	R.A.	Dec.
p		s	″
Sept. 20	E	18·13	35·6
22	E	17·96	35·8
26	E	·93	33·3
Oct. 5	W	18·03	34·6
19	W	·07	35·1
24	W	·02 [2]	35·4
q			
Sept. 27	E	53·96	46·5
Oct. 1	E	·93	48·0
3	E	54·02	47·5
25	W	53·89 [1]	47·6
28	W	·98	47·7
Nov. 29	W	·87	45·8
r			
Sept. 22	E	30·00	17·0
26	E	·07 [1]	16·3
Oct. 1	E	·00	17·3
5	W	·06	17·3
19	W	29·98	17·3
24	W	30·07	17·3
25	W	29·96	17·7
28	W	30·07	16·3
Nov. 5	E	·13	15·7
8	E	·01	17·6
r′			
Sept. 20	E	27·49	11·2
21	E	·47	11·0
Oct. 3	E	·46	11·3
24	W	·45	12·0
Nov. 29	W	·49	10·8
30	W	·41	10·6
s			
Sept. 27	E	37·96	26·2
30	E	·93	27·0
Oct. 5	W	·94	27·2
19	W	·97	27·4
Nov. 1	W	·97	26·8
5	E	·95	26·6

1888	Position	R.A.	Dec.
t		s	″
Oct. 1	E	53·32	45·0
3	E	·45	44·4
Nov. 1	W	·44	44·4
5	E	·53	43·0
29	W	·42	42·1
30	W	·35	44·4
u			
Sept. 20	E	50·55	5·0
21	E	·57	6·7
Oct. 7	W	·65	6·6
19	W	·53	6·5
28	W	·57	6·1
Nov. 8	E	·41	5·6
v			
Sept. 22	E	57·72	38·0
26	E	·78	38·3
Nov. 1	W	·64	37·9
5	E	·75	37·2
8	E	·65	38·5
29	W	·73	38·3
Dec. 19	W	·67	38·1
w			
Sept. 27	E	5·92	18·2
30	E	·84	17·9
Oct. 7	W	·83	17·9
31	W	·87	17·9
Nov. 1	W	·81 [3]	17·1
5	E	·78 [1]	17·7
8	E	·71 [1]	17·0
10	E	·84	17·7
w′			
Sept. 20	E	1·78	16·2
21	E	·66	17·6
Oct. 3	E	·77	16·0
5	W	·69	17·9
Nov. 10	E	·78	16·5

1888	Position	R.A.	Dec.
x		s	″
Sept. 22	E	11·96	4·1
26	E	·92	4·4
Oct. 24	W	·74	4·7
25	W	·77	4·7
28	W	·92	3·1
Nov. 5	E	·79	3·2
8	E	·80	3·7
10	E	·93	3·5
y			
Sept. 27	E	16·81	33·9
30	E	·69	34·4
Oct. 5	W	·51	33·8
Nov. 8	E	·60	34·5
14	W	·68	34·7
29	W	·72	34·9
z			
Oct. 1	E	18·76	49·0
3	E	·69	49·6
19	W	·65	50·4
24	W	·67	49·5
25	W	·68	50·3
Nov. 1	W	·71	49·0
5	E	·71	48·9
8	E	·75 [2]	48·7
α			
Sept. 22	E	32·92	33·0
26	E	33·01	32·7
Oct. 7	W	32·86	33·5
28	W	33·05 [4]	32·3
Nov. 9	E	·03	34·8
29	W	·00	33·4
β			
Sept. 27	E	25·46	32·8
30	E	·43	32·2
Oct. 5	W	·34	33·5
24	W	·43	33·6
25	W	·21 [2]	34·3
Nov. 5	E	·36	32·6
8	E	·18	33·1

[1] 4 wires. [2] 5 wires. [3] 2 wires. [4] 3 wires. [5] Through clouds.

Digitized by Google

Means were first taken for each of the two positions of the instrument, from which a marked difference became at once apparent, viz., W. − E. $\Delta\alpha = -0^{s}\cdot026$, $\Delta\delta = +0''\cdot21$, with a weight of 47 observations. The difference in R.A. amounts to more than three times its mean error and appears very uniform throughout the zone, 20 of the 30 differences having the sign − and only 10 (8 of them below $0^{s}\cdot02$) the opposite sign. The difference in Declination is not much more than double its mean error, but it seems real, for there are 20 differences with one sign against 10 with the other. Each observation was reduced, therefore, to the mean of the two positions E. and W., and simple means were taken from the reduced observations for every star. Comparing with them the individual observations as originally communicated, the following day corrections were determined, which include, therefore, the reduction to the mean of the two positions of the instrument. The observer's remarks relative to the separate series are placed against them, while some notes relating to the lower accuracy of some single observations are given at the foot of the preceding table ; the number of wires is indicated in all cases when it was smaller than six.

Position of Instrument : Clamp East.				Position of Instrument : Clamp West.			
1888	Day Correction	Stars	Observer's remarks	1888	Day Correction	Stars	Observer's remarks
	s ″				s ″		
Sept. 20	−0·04 +0·4	7		Oct. 5	+0·04 0·0	10	I. and S. 3.
21	−0·01 0·0	7		7	0·00 −0·1	8	I. and S. 2–3.
22	−0·01 0·0	9		19	0·00 −0·7	10	I. and S. 2 at beg., 3 at end.
26	−0·01 +0·3	9	Stars very unsteady.	24	+0·02 −0·4	12	I. and S. 3 at beg., 2–3 at end.
27	−0·07 0·0	9	Very unsteady at first.	25	+0·05 −0·6	12	I. and S. 2–3.
30	−0·02 +0·2	8	High wind, unsteady.	28	−0·03 +0·3	10	I. and S. 2 at beg., 1 at end.
Oct. 1	−0·01 −0·6	8	Clock-st. at beg. v. diffused.	31	−0·01 +0·4	8	I. and S. 3; suddenly clouded $2^{h}\,25^{m}$.
3	−0·05 +0·1	9	Steady.	Nov. 1	+0·03 0·0	12	I. and S. 2–1 at beg., 1 at end.
Nov. 5	−0·02 +0·5	12	Images 3. Steadiness 3.	29	−0·01 +0·4	9	I. and S. 2–3 ; stars rather faint.
8	+0·08 +0·1	15	I. and S. 3 ; grad. improv.	30	+0·06 +0·2	3	I. 1., S. 2–1.
9	−0·04 −0·5	3	I. and S. 2–3.				
10	−0·07 +0·3	5	I. and S. 3.				

The means of the day corrections thus found are : for Clamp E. $-0^{s}\cdot022$ $+0''\cdot07$; for Clamp W. $+0^{s}\cdot015$ $-0''\cdot05$. The difference between the two positions therefore comes out for Right Ascension, after it has been freed from the accidental deviation of the separate days, somewhat greater than before from these 22 days alone, and would be further increased to $0^{s}\cdot047$, by excluding the quite anomalous—but very well according *inter se*—Right Ascensions of November 8, while for December 1 the difference becomes reduced to half its former amount and might be considered an accidental error altogether. With very few exceptions however all the stars are observed an equal number of times in both positions of the instrument ; it was not necessary, therefore, to

Digitized by Google

make a further approximation, and the values of the day corrections as given above were used for these 22 days, while to the remaining isolated observations the reduction to $\frac{E.+W.}{2}$ was applied with the amounts $\mp 0^s\cdot01$ $\pm 0''\cdot1$ for Clamp $\frac{E}{W}$. From the reduced observations the following simple means were taken :—

Star	R.A.	Dec.	Obs.	Star	R.A.	Dec.	Obs.	Star	R.A.	Dec.	Obs.
	h m s	° ′ ″			h m s	° ′ ″			h m s	° ′ ″	
a′	1 57 34·042	+17 42 52·45	6	k	2 8 39·590	+22 6 25·79	6	t	2 21 53·418	+24 7 43·97	6
a	2 0 3·988	20 3 25·47	6	l	11 26·150	22 8 33·93	5	u	22 50·547	22 58 6·08	6
b	1 37·118	17 29 44·27	6	m	11 53·732	19 22 57·44	8	v	22 57·716	21 5 38·17	7
c	3 13·997	16 41 55·09	6	n	12 16·939	21 22 49·01	8	w	24 5·815	24 44 17·85	8
d	3 29·912	19 49 1·34	5	o	12 38·537	22 39 2·23	6	w′	26 1·710	21 50 17·02	5
e	4 25·129	18 58 17·33	7	p	14 18·023	19 36 34·90	6	x	28 11·855	24 24 3·99	8
f	5 6·078	20 50 57·42	6	q	14 53·922	22 54 47·12	6	y	28 16·673	22 28 34·47	6
g	6 2·900	21 27 26·72	6	r	17 30·046	20 54 16·87	10	z	30 18·715	22 33 49·24	8
h	6 31·835	20 41 3·91	8	r′	19 27·455	24 39 11·28	6	α	30 32·962	24 9 33·35	6
i	7 38·937	+19 5 22·43	6	s	20 37·947	+22 22 26·88	6	β	31 25·356	+22 38 33·13	7

The mean error of one reduced observation is, from 195 observations, for R.A. $\pm 0^s\cdot055$, for Dec. $\pm 0''\cdot64$.

MELBOURNE.

Apparent places of *Iris* and 26 of the comparison stars, observed by Messrs. G. A. M. Pringle and W. J. Swan with the Transit-Circle, from Nov. 7 to Dec. 22, 1888, and concluded Mean places for 1888·0 of the comparison stars, were communicated by Mr. Ellery. The latter are tabulated below ; no particulars were given as to how the results had been derived.

1888		R.A.	Dec.	Observer	Remarks
		a			
		s	′		
Nov.	7	3·84	23·90	P	*d*
	8	...	26·42	P	*c*
	10	·77	25·86	P	*d*
	16	·94	...	S	*d*
		b			
Nov.	16	37·01	44·00	S	*df*
	19	·05	47·61	P	
	20	36·98	44·97	P	*u*
Dec.	17	37·09	45·67	P	
		c			
Nov.	7	13·80	55·33	P	*d*
	8	·81	55·79	P	*c*
	10	·78	55·17	P	*d*
		d			
Dec.	12	29·81	1·78	S	*f*
	17	·92	2·95	P	
	22	·83	1·85	P	
		e			
Nov.	19	25·06	18·93	P	*u*
	26	24·94	18·67	P	*u*
	30	25·07	18·60	S	*d*
		f			
Dec.	3	5·95	58·68	P	
	7	6·03	57·92	P	
	10	·01	57·24	P	*c*

Digitized by Google

1888	R.A.	Dec.	Observer	Remarks
	g			
	s	″		
Nov. 7	2·77	27·70	P	*d*
10	·83	26·63	P	*d*
19	·82	26·90	P	*f*
	h			
Dec. 12	31·84	4·34	S	
17	·87	4·97	P	
22	·82	3·94	P	
	i			
Nov. 20	38·74	22·35	P	
22	·87	22·79	S	*df*
30	·93	22·82	S	*d*
	k			
Nov. 7	39·56	26·19	P	*d*
8	·74	26·91	P	*e*
10	·42	25·49	P	*d*
	l			
Nov. 16	26·07	...	S	*df*
19	·04	34·54	P	
20	25·96	33·81	P	*f*
22	26·06	...	S	*f*
26	·03	34·38	P	*f*
	n			
Nov. 7	16·80	49·80	P	*d*
8	·86	51·38	P	*e*
10	·69	49·16	P	*d*
	o			
Nov. 30	38·43	3·76	S	*d*
Dec. 3	·43	3·59	P	
6	...	3·05	S	*ef*
7	·53	3·33	P	

1888	R.A.	Dec.	Observer	Remarks
	p			
	s	″		
Nov. 20	17·81*b*	36·12	P	*f*
Dec. 3	18·02	36·15	P	*f*
7	17·90*b*	36·24	P	*f*
	q			
Nov. 8	53·97	50·76	P	*e*
10	·74	47·33	P	*d*
16	...	50·45	S	*d*
19	·90	48·60	P	*u*
	r			
Nov. 10	29·96	16·20	P	*d*
19	30·04	15·38	P	*f*
20	29·85	16·44	P	*f*
	s			
Nov. 7	37·80	28·19	P	*d*
8	·92	27·73	P	*e*
10	·71	26·31	P	*d*
	t			
Nov. 13	53·25	46·23	S	*f*
19	·39	44·84	P	*f*
20	·19	44·85	P	*f*
22	·32	42·33	S	*f*
	u			
Nov. 16	50·53	7·06	S	*d*
19	·60	6·28	P	*du*
20	·50	6·54	P	
	v			
Nov. 7	57·57	38·44	P	*d*
8	·72	39·03	P	*e*
10	·48	37·54	P	*d*

1888	R.A.	Dec.	Observer	Remarks
	w			
	s	″		
Nov. 22	5·73	18·92	S	*df*
26	·75	19·04	P	
30	·89	18·67	S	*d*
	x			
Nov. 16	11·83	16·04	S	*df*
19	·83	5·04	P	*du*
20	·65	5·29	P	
Dec. 10	·79	5·47	P	
	y			
Nov. 7	16·57	35·43	P	*d*
8	·66	36·13	P	*e*
10	·52	33·38	P	*d*
	z			
Nov. 22	18·77	50·38	S	*f*
30	·76	49·00	S	*df*
Dec. 3	·62*b*	50·02	P	*f*
	a			
Nov. 19	32·99	34·05	P	*du*
20	·81	32·70	P	*u*
	β			
Nov. 7	25·28	33·30	P	*d*
8	·33	34·71	P	*e*
10	·16	33·67	P	*d*

Digitized by Google

It is the observers' practice at Melbourne to estimate weights of the observation, often different for the two co-ordinates, on a very extended scale, ranging from 0 to 10. As the true relative weights of the results of different observations are generally represented by numbers very different from such estimates, no use whatever has been made here of the estimates, which mainly depend upon the conditions of the images, but letters are printed opposite the initials of the observers' names to indicate the reason of a suspected inferiority when it was noted—*c* for cloudy, *f* for faint, *u* for unsteady, and *d* for diffused. It may be noticed besides that the following observations were estimated particularly inferior, weight 2 having been given to them in the observation: November 8, **q**, **y**, and in Declination only, **k**, **n**; November 10, **r** in R.A.; November 16, **l**, **x**; November 19, **r** in R.A.; November 22, **l**, **t** in R.A., **z**; November 30, **z**; December 3, **p**. Weight 1 only was estimated November 8 for β, and November 13 for **t**.

The observations of Swan being only few in number and giving Right Ascensions at first sight smaller than Pringle's were reduced to the latter observer by applying a correction $+0^{s}\cdot03$, and means were then taken, no use however being made either in this or in the following stage of the discussion of the three Right Ascensions which were observed, because of the faintness of the stars, with bright wires, and are marked "*b*" in the above table.

The Declination of **x** November 16 was diminished 10″, assuming that an error of this amount had been made in the reduction of the observation. But as an eyepiece-micrometer was used at Melbourne, the error may be in its reading and the real correction quite different. Comparison with these means gave the following mean daily deviations of the original data :—

Date	R.A.	Dec.	No. St.	Date	R.A.	Dec.	No. St.	Date	R.A.	Dec.	No. St.
	s	″			s	″			s	″	
Nov. 7	− 0·01	− 0·08	9	Nov. 20	− 0·09	− 0·18	8, 9	Dec. 7	+ 0·04·	+ 0·02	2, 4
8	+ 0·09	+ 0·87	8, 9	22	− 0·01	− 0·37	5, 4	10	+ 0·01	− 0·35	2
10	− 0·07	− 0·70	11	26	− 0·05	0·00	3	12	− 0·03	− 0·25	2
13	− 0·05	+ 1·67	1	30	+ 0·02	− 0·10	5	17	+ 0·04	+ 0·48	3
16	+ 0·02	+ 0·15	5, 4	Dec. 3	− 0·04·	+ 0·27	2, 4	22	− 0·03	− 0·40	2
19	+ 0·04·	+ 0·14	10	6	...	− 0·38	1				

The mean of the reductions for the days of observer Swan (November 13, 16, 22, 30, December 6, 12), which should give the value of his personal equation, is only $-0^{s}\cdot01$, or exactly zero if the isolated and very poor observation November 13 is omitted. Only for November 8, 10, 20, and for R.A. November 19 and 26, the mean daily deviations as given above were subtracted; all the other values are far within the

Digitized by Google

limits of probable error and were neglected. The means then formed became the following :—

Star	R.A.	Dec.	Obs.	Star	R.A.	Dec.	Obs.	Star	R.A.	Dec.	Obs.
	h m s	° ′ ″			h m s	° ′ ″			h m s	° ′ ″	
a	2 0 3·873	+20 3 25·34	3	k	2 8 39·567	+22 6 26·14	3	u	2 22 50·557	+22 58 6·69	3
b	1 37·042	17 29 45·61	4	l	11 26·050	22 8 34·30	5, 3	v	22 57·583	21 5 38·28	3
c	3 13·790	16 41 55·37	3	n	12 16·777	21 22 50·06	3	w	24 5·807	24 44 18·88	3
d	3 29·853	19 49 2·19	3	o	12 38·463	22 39 3·43	3, 4	x	28 11·785	24 24 5·50	4
e	4 25·023	18 58 18·63	3	p	14 18·02	19 36 36·23	1, 3	y	28 16·577	22 28 34·92	3
f	5 5·997	20 50 57·96	3	q	14 53·847	22 54 49·24	3, 4	z	30 18·765	22 33 49·80	2, 3
g	6 2·813	21 27 27·31	3	r	17 29·987	20 54 16·30	3	α	30 32·920	24 9 33·48	2
h	6 31·843	20 41 4·42	3	s	20 37·803	22 22 27·35	3	β	31 25·250	22 38 33·82	3
i	7 38·877	19 5 22·71	3	t	21 53·298	24 7 44·61	4				

The mean error of one observation is : for R.A. $\pm 0^{s}\cdot049$ (78 obs.) ; for Dec. $\pm 0''\cdot79$ (82 obs.).

OXFORD.

The observations are published in the *Monthly Notices*, May, 1889. Comparing the individual results with provisional normal places, referred to a system representing the mean between the Berlin and Leiden positions (the Right Ascensions of both being corrected for magnitude equation), the following reductions were found :—

1888	Δα	Δδ	No. St.	Obs.	1888	Δα	Δδ	No. St.	Obs.	1888–9	Δα	Δδ	No. St.	Obs.
	s	″				s	″				s	″		
Oct. 15	+ 0·04	— 0·63	1	R	Nov. 17	...	— 0·27	1	R	Dec. 7	— 0·03	— 0·11	1	R
17	...	— 0·06	2	R	20	— 0·09	— 1·74	3	FB	12	— 0·07	— 1·60	4	R
19	— 0·05	— 0·61	3	R	21	— 0·08	— 0·29	2	R	13	...	— 1·06	1	FB
20	— 0·06	— 1·63	1, 2	FB	22	— 0·04	+ 0·15	6	FB	18	— 0·11	— 0·21	2	R
22	— 0·02	— 2·52	1	R	26	+ 0·02	— 0·46	1	R	22	0·00	— 0·91	4	FB
23	— 0·03	— 1·34	2	FB	27	+ 0·00	— 1·97	5	FB	26	+ 0·02	— 1·08	4	FB
30	— 0·03	— 0·79	2	FB	30	— 0·01	— 0·40	2	R	28	0·00	— 0·20	1	R
Nov. 13	— 0·06	+ 0·37	4	FB	Dec. 1	...	— 0·88	1	FB	Jan. 1	— 0·13	— 0·23	5, 4	R
16	— 0·01	— 0·37	2, 3	FB	6	— 0·06	— 1·83	2, 3	FB	7	— 0·03	— 0·28	1	W

The mean of the reductions for observer R (Robinson) is, from 23 and 25 observations, $-0^{s}\cdot064$, $-0''\cdot60$, or taken by days (11 and 13): $-0^{s}\cdot039$, $-0''\cdot58$; the mean of the two determinations $-0^{s}\cdot052$, $-0''\cdot59$. In the same manner we have for observer FB (F. Bellamy) : $-0^{s}\cdot029$ (35), $-0''\cdot92$ (40) ; $-0^{s}\cdot034$ (11) $-1''\cdot01$ (13) ; mean : $-0^{s}\cdot031$, $-0''\cdot96$. Excluding however those days on which large differences from these

Digitized by Google

mean values occur, and appear to be really established daily deviations, we get the following numbers :—

Robinson.

R.A. without Jan. 1 : $-0^s.046$ (18 obs.), $-0^s.031$ (10 days) } $-0^s.038$

Dec. without Oct. 22 and Dec. 12 : $-0''.31$ (20 obs.), $-0''.31$ (11 days) } $-0''.31$

F. Bellamy.

(No change in R.A.)

Dec. without Nov. 13, 22, 27 : $-1''.17$ (25 obs.), $-1''.16$ (10 days) } $-1''.17$

The adopted reductions are :—

for Robinson : $\Delta\alpha$ Jan. 1 $-0^s.13$, other days $-0^s.04$; $\Delta\delta$ Dec. 12 $-1''.60$; other days $-0''.31$

for Bellamy : $\Delta\alpha - 0^s.03$; $\Delta\delta$ Nov. 13 $+0''.37$, 22 $+0''.15$, 27 $-1''.97$; other days $-1''.17$

Wickham's isolated observation was not used. The means of the reduced positions then became :—

Star	R.A.	Dec.	Obs.	Star	R.A.	Dec.	Obs.	Star	R.A.	Dec.	Obs.
	h m s	° ′ ″			h m s	° ′ ″			h m s	° ′ ″	
a′	1 57 33·963	+17 42 52·02	3	m	2 11 53·743	+19 22 57·37	6	v	2 22 57·620	+21 5 37·37	2
b	2 1 36·950	17 29 43·79	2, 3	n	12 16·770	21 22 48·77	2	w	24 5·750	24 44 17·28	2, 3
c	3 13·937	16 41 55·15	3, 4	o	12 38·48	22 39 1·91	1	w′	26 1·740	21 50 17·26	3
d	3 29·82	19 49 1·30	1, 2	p	14 17·930	19 36 34·24	2	x	28 11·793	24 24 4·02	3, 4
e	4 25·040	18 58 17·31	2	q	14 53·890	22 54 48·13	3	y	28 16·610	22 28 34·95	3
f	5 6·04	20 50 56·82	1	r	17 29·99	20 54 17·77	1	z	30 18·670	22 33 49·06	2, 3
g	6 2·85	21 27 25·96	1	s	20 37·920	22 22 26·74	2	α	30 32·92	24 9 33·56	1
h	6 31·853	20 41 3·72	3	t	21 53·32	24 7 44·92	1, 2	β	31 25·345	22 38 34·31	2
l	11 26·130	22 8 32·78	2	u	22 50·557	22 58 6·72	4				

Mean error of one reduced observation : in R.A., from 51 observations, $\pm 0^s.061$; in Dec., from 60 observations, $\pm 0''.66$.

PULKOWA.

Observations made with the 6·4-inch Repsold Meridian Circle by Hr. Romberg ; positions depending on the Fundamental Catalogue of the *Berliner Jahrbuch*. The instrument was always in the same position. The transits were observed by eye and ear, generally over seven wires.

The two " Standard Stars," **h** and **m**, were always observed on the same day, and different divisions read, as shown in the following table :—

1888	h		m		Division read		1888	h		m		Division read	
	h m s	° ′ ″	h m s	° ′ ″	′	″		h m s	° ′ ″	h m s	° ′ ″	′	″
Sept. 25	2 6 31·87	+20 41 4·3	2 11 53·76	+19 22 58·1	50	8	Oct. 5	2 6 31·77	+20 41 4·3	2 6 53·64	+19 22 58·0	48	6
27	31·71	3·3	53·65	57·6	50	8	6	31·89	3·9	53·71	56·9	48	6
28	31·80	3·1	53·71	57·2	52	10	7	31·79	3·2	53·69	57·6	48	6
30	31·72	3·7	53·63	58·2	52	10	8	31·90	3·2	53·71	57·1	48	6
Oct. 2	31·88	4·1	53·75	57·7	52	10	9	31·97	3·7	53·69	57·6	50	8
4	31·90	2·7	53·68	57·5	52	10	11	31·86	3·9	53·75	57·4	50	8

Digitized by Google

The Mean places 1888·0 of the other stars as communicated by Hr. Romberg are :—

1888–9	R.A.	Dec.
a′		
	s	′
Dec. 4	33·95	49·8
8	·97	52·5
12	34·08	50·8
15	·03	52·7
17	·08	[46·5]
18	33·97	53·3
a		
Nov. 2	3·84	25·7
3	·96	24·8
Dec. 12	·92	[21·7]
15	·76	25·9
18	·93	25·3
b		
Dec. 15	36·94	44·2
17	·96	41·9
18	37·00	44·9
Jan. 3	36·96	45·0
11	·93	45·9
c		
Dec. 17	13·95	55·2
18	·92	55·1
Jan. 11	·84	56·4
12	·90	55·7
d		
Nov. 1	29·98	0·1
2	·71	1·1
3	·94	2·2
Jan. 13	·87	3·3
e		
Dec. 8	25·10	16·0
Jan. 3	·21	17·0
14	24·97	17·4
15	25·16	18·2

1888–9	R.A.	Dec.
f		
	s	′
Oct. 27	6·14	56·5
Jan. 11	5·89	56·1
12	6·01	54·7
13	·13	56·1
i		
Nov. 1	38·82	21·5
2	·71	23·1
3	·87	22·2
Dec. 4	·86	22·3
8	·95	19·4
k		
Oct. 27	39·69	25·9
Dec. 15	·52	25·9
Jan. 3	·58	27·0
11	·47	25·0
l		
Nov. 1	26·25	34·1
3	·15	33·2
Dec. 18	·14	34·9
Jan. 11	·20	33·9
n		
Dec. 15	16·74	49·4
17	·83	51·1
Jan. 3	17·00	50·2
13	16·97	48·2
o		
Oct. 27	38·56	2·9
Dec. 4	·34	1·9
8	·42	1·5
Jan. 14	·32	2·8

1888–9	R.A.	Dec.
q		
	s	′
Oct. 4	53·89	46·8
6	·85	46·9
7	·93	47·5
8	·93	47·9
9	·86	47·2
11	·83	47·5
r		
Sept. 22	30·05	15·6
Dec. 15	29·84	15·0
18	·98	16·0
Jan. 3	30·03	17·6
11	29·84	16·2
13	30·05	16·1
r′		
Sept. 25	27·42	9·6
27	·23	10·4
28	·44	10·1
30	·27	11·8
Oct. 2	·36	10·6
6	·38	11·0
s		
Oct. 4	37·84	27·1
7	·97	28·0
8	38·00	27·1
11	37·68	27·4
Nov. 1	·74	26·3
Dec. 8	·86	25·9
t		
Sept. 27	53·22	44·6
28	·48	41·9
Oct. 2	·42	43·1
Nov. 2	·27	45·0
3	·47	43·8

1888–9	R.A.	Dec.
u		
	s	′
Oct. 5	50·46	5·5
6	·59	7·2
11	·54	7·4
Jan. 3	·43	6·1
13	·32	7·3
v		
Dec. 8	57·60	38·4
15	·55	38·3
17	·59	39·1
18	·66	38·3
w		
Sept. 25	5·75	17·7
27	·73	16·7
28	·74	17·5
30	·76	18·1
Oct. 4	·82	16·4
7	·84	17·0
9	·91	17·7
27	·86	16·8
w′		
Sept. 22	1·71	16·7
Oct. 2	·76	17·1
x		
Sept. 25	11·72	4·0
28	·79	1·8
30	·87	4·2
Oct. 8	·73	3·8
9	·77	3·0
11	·89	2·8
Nov. 3	·79	4·9

1888–9	R.A.	Dec.
y		
	s	′
Oct. 27	16·54	33·6
Nov. 1	·65	33·3
2	·62	35·6
Dec. 8	·55	32·1
15	·57	33·4
18	·67	35·2
Jan. 3	·48	33·9
z		
Oct. 4	18·65	47·0
6	·69	50·3
Dec. 15	·59	49·8
17	·54	46·5
18	·60	49·9
Jan. 3	·43	48·4
α		
Sept. 22	33·00	32·8
27	32·88	33·2
30	·89	33·9
Oct. 2	·83	33·0
5	·96	33·2
7	33·04	33·3
8	32·98	33·2
9	·92	33·6
β		
Sept. 25	25·33	34·5
Oct. 27	·36	32·7
Nov. 1	·26	34·2
2	·14	33·4
3	·23	32·9
Dec. 8	[24·89]	33·3
18	25·38	34·2

Digitized by Google

The observations are largely discordant for some of the stars; the observer complains of a general diffusedness of the images. In two observations of Declination however, the apparent error is such as to make it probable that either some mistake was made in reading the circle, or that the instrument was disturbed between the pointing and the reading. These two Declinations and one Right Ascension, placed in [ ], have been excluded, and all the other observations used without exception. From comparison with these means the following mean daily deviations are found :—

Date	R.A.	Dec.	No. St.	Date	R.A.	Dec.	No. St.	Date	R.A.	Dec.	No. St.
	s	″			s	″			s	″	
Sept. 22	+ 0·04	− 0·4	3	Oct. 8	+ 0·04	0·0	6	Dec. 15	− 0·05	0·0	9
25	+ 0·01	+ 0·3	6	9	+ 0·03	+ 0·0	6	17	0·00	− 0·6	6, 5
27	− 0·10	− 0·1	6	11	0·00	+ 0·1	6	18	+ 0·03	+ 0·5	10
28	+ 0·02	− 0·8	6	27	+ 0·08	− 0·1	6	Jan. 3	+ 0·02	+ 0·4	7
30	− 0·05	+ 0·7	6	Nov. 1	+ 0·02	− 0·5	6	11	− 0·07	+ 0·3	6
Oct. 2	+ 0·01	− 0·1	6	2	− 0·09	+ 0·5	6	12	− 0·01	− 0·5	2
4	+ 0·02	− 0·6	6	3	+ 0·03	− 0·1	7	13	0·00	+ 0·1	6
5	− 0·04	− 0·0	4	Dec. 4	− 0·04	− 0·8	3	14	− 0·11	+ 0·4	2
6	+ 0·05	+ 0·3	6	8	+ 0·01	− 0·9	6, 7	15	+ 0·05	+ 1·0	1
7	+ 0·04	+ 0·1	6	12	+ 0·05	− 1·0	2, 1				

Though only a few of these values are decidedly greater than the uncertainty of the daily deviation, they have been used to reduce the observations throughout, with the exception of those given by a single observation.

The means of the reduced observations were then found :—

Star	R.A.	Dec.	Obs.	Star	R.A.	Dec.	Obs.	Star	R.A.	Dec.	Obs.
	h m s	° ′ ″			h m s	° ′ ″			h m s	° ′ ″	
a′	1 57 34·012	+17 42 52·02	6, 5	l	2 11 26·181	+22 8 33·97	4	u	2 22 50·462	+22 58 6·53	5
a	2 0 3·887	20 3 25·20	5, 4	m	11 53·693	19 22 57·58	12	v	22 57·601	21 5 38·72	4
b	1 36·971	17 29 44·26	5	n	12 16·884	21 22 49·47	4	w	24 5·794	24 44 17·29	8
c	3 13·915	16 41 55·67	4	o	12 38·426	22 39 2·57	4	w′	26 1·710	21 50 17·15	2
d	3 29·885	19 49 1·67	4	q	14 53·851	22 54 47·31	6	x	28 11·799	24 24 3·36	7
e	4 25·131	18 58 17·12	4	r	17 29·969	20 54 15·93	6	y	28 16·579	22 28 33·86	7
f	5 6·044	20 50 55·90	4	r′	19 27·359	24 39 10·52	6	z	30 18·570	22 33 48·65	6
h	6 31·835	20 41 3·62	12	s	20 37·826	22 22 27·23	6	α	30 32·941	24 9 33·24	8
i	7 38·856	19 5 22·02	5	t	21 53·398	24 7 43·80	5	β	31 25·268	22 38 33·61	6, 7
k	8 39·570	22 6 25·05	4								

Mean error of one reduced observation : in R.A. ±0ˢ·074 from 135 observations ; in Dec. ±0″·86 from 134 observations.

Digitized by Google

Reduction of the Different Series to a Normal System and Combination of Results.

The Right Ascensions of the Berlin and Leiden series, having been corrected for magnitude equation by aid of carefully conducted experiments, and being referred to the same fundamental system, should agree within accidental error of observation. This is not quite the case, for the mean difference B. – L. from the 25 common stars is, for R.A. (both series being corrected for magnitude), $= -0^{s}\cdot015$, while the difference B. – L. $\Delta\delta$ is $= -0''\cdot41$, which is the reduction for the region under discussion of the Leiden Declinations as provisionally reduced to the system of the Catalogue of the *Astronomische Gesellschaft*. The difference in R.A. would vanish, if no correction for magnitude had been applied to the Berlin observations, viz.: mean, Berlin uncorrected – Leiden corrected, $= -0^{s}\cdot002$, but the application of the correction for both of the series makes them markedly more consistent with each other in detail, the differences being :—

	s	s	s
For 6 st. mag. 5·5 to 6·2 mean 5·95	B. dir.—L. corr. — 0·019	B. corr.—L. corr.— 0·022	B.—L. without corrs. — 0·058
„ 7 „ „ 6·8 „ 7·5 „ 7·26	0·009	— 0·011	— 0·054
„ 6 „ „ 7·7 „ 8·0 „ 7·78	+ 0·010	— 0·006	— 0·054
„ 6 „ „ 8·2 „ 8·6 „ 8·33	— 0·001	— 0·022	— 0·076

From a comparison of the separate differences, both series corrected for magnitude, with the means $-0^{s}\cdot015$ and $-0''\cdot41$, the mean error of one difference becomes: in R.A. $\pm0^{s}\cdot0192$, in Dec. $\pm0''\cdot248$, or supposing the results in both of the series to be equally accurate, the mean error of one Berlin or one Leiden result becomes $\pm0^{s}\cdot0136$ and $\pm0''\cdot175$. Apparently both of these series are of very prominent accuracy and far superior to any of the other seven; they were taken, therefore, as a first base for the investigation of the constant errors. Simple means were formed from the Berlin and Leiden results, and a reduction $-0^{s}\cdot007$ $-0''\cdot21$ applied to the Leiden results for the five stars which were not observed at Berlin. The deviations from the positions so obtained were found from the simple means taken by stars (with weight $\frac{1}{2}$ for the Melbourne Right Ascensions observed only once) for

	s	"			s	"	
Cape	+ 0·023	+ 0·69	from 27 st.	Leipzig	+ 0·051	+ 0·07	from 30 st.
Dublin	+ 0·004	+ 0·30	„ 26 „	Melbourne	— 0·030	+ 0·72	„ 26 „
Greenwich	+ 0·018	— 0·56	„ 26 „	Pulkowa	— 0·010	— 0·05	„ 27 „

As a mean reduction $-0^{s}\cdot035$ was applied to the Oxford observations beforehand, and as the Right Ascensions of the clock-stars used at Greenwich, Melbourne, and Oxford were nearly $0^{s}\cdot03$ smaller systematically than those used in the other

Digitized by Google

series, it appears that the Right Ascensions of the small stars determined at Dublin and Melbourne, and by eye and ear at the Cape by Cox and at Pulkowa, are in close accordance with the corrected Berlin-Leiden results without any correction for difference of magnitude (mean $7^m\cdot4$) with the clock-stars (mean 4^m), while the Right Ascensions observed by eye and ear at the Cape by Maclear and at Oxford are $0^s\cdot06$ greater, and those observed chronographically at Greenwich and Leipzig $0^s\cdot05$ greater. In Declination, three of the four series directly referred to the *Jahrbuch* system give a mean deviation from the system $\frac{1}{2}(B.+L.) = -0''\cdot06$ within $0''\cdot15$ accordant with this number, from which the Dublin Declinations referred to the same system differ by the rather unexpected quantity $+0''\cdot36$.

It should be stated that the reductions given for Greenwich refer to preliminary means derived from the observations of 1888 alone. Making use however throughout of the values of the foregoing table in the case of Greenwich for the definitive means, and adding $0^s\cdot007$ and $0''\cdot07$ to the Berlin results and subtracting the same quantities from the Leiden results (both of them being corrected for magnitude equation in R.A.), the numbers given in the following table under the heading "R.A. red." and "Dec. red." were obtained as first approximations to the results reduced to a homogeneous system. From these numbers the means (normal places in first approximation) were taken with relative weights, provisionally determined, not differing much from the weights as determined in a subsequent approximation which are given in the columns headed p. The preceding columns, for R.A. and for Dec., repeat the means derived above from the separate series, with the addition of the mean epochs. For Oxford, these same means are at once the "reduced" values, the reduction having been made beforehand. The magnitudes are taken from the *Bonner Durchmusterung*. The remaining columns of the table will be explained hereafter.

	Epoch	No. obs.	Right Ascension				Declination			
			orig.	red.	red. Diff. ($0^s\cdot001$)	p	orig.	red.	red. Diff. ($0''\cdot01$)	p
a' $7^m\cdot0$			$1^h\,57^m$				$+17°\,42'$			
			s	s			"	"		
Leiden c.	88·72	4	34·016	·009	+ 16	4	52·65	52·44	+ 4	3
Dublin	88·84	7	33·981	·977	— 16	3	52·44	52·14	— 26	3
Greenwich	88·81	7	33·983	·965	— 20	3	52·30	52·86	+ 45	2
Leipzig	88·75	6	34·042	·991	— 1	2	52·45	52·38	— 3	2
Oxford	88·89	3	33·963	·963	— 24	1	52·02	52·02	— 41	½
Pulkowa	88·95	6, 5	34·012	·022	+ 31	1	52·02	52·07	— 31	1
		33, 32		33·992	— 8	14		52·41		11½

Digitized by Google

	Epoch	No. obs.	Right Ascension				Declination			
			orig.	red.	red. Diff. ($0^s.001$)	p	orig.	red.	red. Diff. ($0''.01$)	p
a $7^m.7$			h m 2 0				+ 20° 8′			
Berlin c.	88·91	8	s 3·903	s ·910	+ 10	7	″ 25·39	″ 25·60	+ 9	4
Leiden c.	88·75	5	3·890	·883	— 20	4	25·74	25·53	+ 3	3
Dublin	88·83	6	3·918	·914	+ 11	3	25·83	25·53	+ 3	2
Cape	88·82	6	3·896	·873	— 28	2	26·55	25·86	+ 35	2
Greenwich	89·00	6	3·908	·890	— 15	2	25·07	25·63	+ 12	2
Leipzig	88·78	6	3·988	·937	+ 35	2	25·47	25·40	— 11	2
Melbourne	88·86	3	3·873	·903	— 1	1½	25·34	24·62	— 90	1
Pulkowa	88·91	5, 4	3·887	·897	— 4	1	25·20	25·25	— 23	1
		45, 44		3·902	0	22½		25·51	+ 2	17
b $7^m.3$			h m 2 1				+ 17° 29′			
Berlin c.	88·84	4	s 37·001	s ·008	— 14	5	″ 43·54	″ 43·75	— 25	3
Leiden c.	88·78 / 88·77	5	37·037	·030	+ 5	4	44·38	44·17	+ 18	3
Dublin	88·87	6, 5	37·042	·038	+ 13	3	43·72	43·42	— 57	2
Cape	88·88	7	37·015	·992	— 31	2	44·41	43·72	— 29	2
Greenwich	88·80	7	37·023	·005	— 16	3	43·83	44·39	+ 39	2
Leipzig	88·81	6	37·118	·067	+ 43	2	44·27	44·20	+ 20	2
Oxford	88·95 / 88·94	2, 3	36·950	·950	— 69	1	43·79	43·79	— 21	½
Melbourne	88·90	4	37·042	·072	+ 46	1½	45·61	44·89	+ 88	1
Pulkowa	88·98	5	36·971	·981	— 42	1	44·26	44·31	+ 34	1
		46		37·024	— 8	22½		44·00	0	16½
c $6^m.8$			h m 2 3				+ 16° 41′			
Berlin c.	88·88	4	s 13·883	s ·890	+ 3	5	″ 54·38	″ 54·59	— 21	3
Leiden c.	88·80	5	13·887	·880	— 10	4	54·95	54·74	— 5	3
Dublin	88·77	4	13·880	·876	— 14	2	55·22	54·92	+ 13	2
Cape	88·89	7	13·886	·863	— 25	2	54·85	54·16	— 65	2
Greenwich	88·94	3	13·887	·869	— 10	2	54·11	54·67	— 13	1
Leipzig	88·78	6	13·997	·946	+ 57	2	55·09	55·02	+ 22	2
Oxford	88·97 / 88·96	3, 4	13·937	·937	+ 53	1	55·15	55·15	+ 33	1
Melbourne	88·86	3	13·790	·820	— 71	1½	55·37	54·65	— 16	1
Pulkowa	89·00	4	13·915	·925	+ 37	½	55·67	55·72	+ 95	1
		39, 40		13·889	— 3	20		54·80	— 4	16
d $7^m.5$			h m 2 3				+ 19° 49′			
Berlin c.	88·96	4	s 29·870	s ·877	— 3	5	″ 1·45	″ 1·66	+ 4	3
Leiden c.	88·75	3	29·873	·866	— 17	3	2·03	1·82	+ 21	3
Dublin	88·83	4	29·892	·888	+ 5	2	2·52	2·22	+ 61	2
Cape	88·91 / 88·92	5, 6	29·951	·928	+ 47	2	2·37	1·68	+ 5	2
Greenwich	89·31	5	29·900	·882	0	2	1·46	2·02	+ 40	1
Leipzig	88·79	5	29·912	·861	— 21	2	1·34	1·27	— 35	2
Oxford	89·00 / 88·88	1, 2	29·820	·820	— 57	½	1·30	1·30	— 34	½
Melbourne	88·96	3	29·853	·883	— 1	1½	2·19	1·47	— 16	1
Pulkowa	88·89	4	29·885	·895	+ 14	½	1·67	1·72	+ 13	1
		34, 36		29·882	+ 1	18½		1·62	+ 12	15½

Digitized by Google

	Epoch	No. obs.	Right Ascension				Declination			
			orig.	red.	red. Diff. ($0^s.001$)	p	orig.	red.	red. Diff. ($0''.01$)	p
e $6^m.0$			$2^h\ 4^m$				$+\ 18^\circ\ 58'$			
Berlin c.	88·90	4	$25^s.065$	$^s.072$	− 6	5	$17''.79$	$18''.00$	+ 26	3
Leiden c.	88·89	4	25·102	·095	+ 14	4	17·94	17·73	0	3
Dublin	88·97 / 88·99	5, 4	25·064	·060	− 21	2	18·17	17·87	+ 14	2
Cape	88·87	5	25·105	·082	+ 3	2	19·18	18·49	+ 74	2
Greenwich	88·65	3	25·087	·069	+ 10	2	16·59	17·15	− 59	1
Leipzig	88·82	7	25·129	·078	− 2	2	17·33	17·26	− 48	2
Oxford	88·89	2	25·040	·040	− 35	1	17·31	17·31	− 45	½
Melbourne	88·90	3	25·023	·053	− 29	1½	18·63	17·91	+ 16	1
Pulkowa	89·01	4	25·131	·141	+ 62	½	17·12	17·17	− 54	1
		37, 36		25·080	− 2	20		17·74	+ 2	15½
f $7^m.5$			$2^h\ 5^m$				$+\ 20^\circ\ 50'$			
Berlin c.	88·84	4	$6^s.034$	$^s.041$	+ 7	5	$56''.94$	$57''.15$	+ 15	3
Leiden c.	88·81	3	6·056	·049	+ 12	3	57·12	56·91	− 8	3
Dublin	88·95	4	6·037	·033	− 4	2	57·10	56·80	− 19	2
Cape	88·84	4	6·035	·012	− 23	1	57·85	57·16	+ 15	2
Greenwich	88·81	7, 6	6·031	·013	− 23	3	56·39	56·95	− 5	2
Leipzig	88·84	6	6·078	·027	− 9	2	57·42	57·35	+ 35	2
Oxford	88·87	1	6·040	·040	+ 9	½	56·82	56·82	− 20	¼
Melbourne	88·93	3	5·997	·027	− 11	1½	57·96	57·24	+ 23	1
Pulkowa	89·02	4	6·044	·054	+ 19	½	55·90	55·95	−102	1
		36, 35		6·036	− 3	18½		57·00	+ 4	16½
g $8^m.5$			$2^h\ 6^m$				$+\ 21^\circ\ 29'$			
Leiden c.	88·73	2	$2^s.904$	$^s.897$	+ 23	2	$26''.63$	$26''.42$	+ 8	2
Dublin	88·95	4	2·897	·893	+ 19	2	26·05	25·75	− 59	2
Cape	88·90 / 88·89	6, 5	2·912	·889	+ 17	2	27·11	26·42	+ 6	2
Greenwich	88·90	3	2·853	·835	− 52	2	26·05	26·61	+ 26	1
Leipzig	88·80	6	2·900	·849	− 24	2	26·72	26·65	+ 30	2
Oxford	89·00	1	2·850	·850	− 18	½	25·96	25·96	− 41	¼
Melbourne	88·87	3	2·813	·843	− 32	1½	27·31	26·59	+ 23	1
		25, 24		2·873	− 5	12		26·35	+ 3	10½
h $5^m.5$			$2^h\ 6^m$				$+\ 20^\circ\ 41'$			
Berlin c.	88·93	8	$31^s.849$	$^s.856$	+ 17	7	$3''.39$	$3''.60$	− 8	4
Leiden c.	88·83	7	31·870	·863	+ 21	5	4·09	3·88	+ 21	4
Dublin	88·84 / 88·82	4, 5	31·842	·838	− 4	2	4·16	3·86	+ 19	2
Cape	88·88	6	31·821	·798	− 42	2	3·79	3·10	− 59	2
Greenwich	88·97	2	31·795	·777	− 36	1	3·04	3·60	− 8	1
Leipzig	88·78	8	31·835	·784	− 57	2	3·91	3·84	+ 16	2
Oxford	88·94	3	31·853	·853	+ 17	1	3·72	3·72	+ 2	½
Melbourne	88·96	3	31·843	·873	+ 30	1½	4·42	3·70	+ 1	1
Pulkowa	88·76	12	31·835	·845	+ 5	2	3·62	3·67	+ 2	2
		53, 54		31·841	+ 3	23½		3·68	+ 1	18½

Digitized by Google

	Epoch	No. obs.	Right Ascension				Declination			
			orig.	red.	red. Diff. ($0^s.001$)	p	orig.	red.	red. Diff. ($0''.01$)	p
i $7^m.2$			$2^h\ 7^m$				$+19°\ 5'$			
Berlin c.	88·90	4	$38^s.865$	$.872$	− 7	5	21″·82	22″·03	− 4	3
Leiden c.	88·83	5	38·869	·862	− 20	4	22·13	21·92	− 14	3
Dublin	88·82	4	38·895	·891	+ 9	2	22·40	22·10	+ 4	2
Cape	88·87	6	38·919	·896	+ 6	2	22·72	22·03	− 5	2
Greenwich	89·11	5	38·916	·898	+ 21	2	22·12	22·68	+ 61	1
Leipzig	88·82	6	38·937	·886	+ 5	2	22·43	22·36	+ 29	2
Melbourne	88·90	3	38·877	·907	+ 14	1½	22·71	21·99	− 9	1
Pulkowa	88·88	5	38·856	·866	− 14	1	22·02	22·07	+ 3	1
		38		38·881	− 1	19½		22·07	+ 8	15
k $7^m.8$			$2^h\ 8^m$				$+22°\ 6'$			
Berlin c.	88·87	4	$39^s.593$	$.600$	+ 11	5	25″·17	25″·38	0	3
Leiden c.	88·79	5	39·612	·605	+ 13	4	25·28	25·07	− 30	3
Dublin	88·87	6	39·614	·610	+ 18	3	25·87	25·57	+ 20	2
Cape	88·84	6	39·652	·629	+ 39	2	26·23	25·54	+ 15	2
Greenwich	88·88	5	39·572	·554	− 41	2	24·72	25·28	− 10	1
Leipzig	88·86	6	39·590	·539	− 52	2	25·79	25·72	+ 34	2
Melbourne	88·86	3	39·567	·597	+ 4	1½	26·14	25·42	+ 3	1
Pulkowa	88·96	4	39·570	·580	− 10	½	25·05	25·10	− 25	1
		39		39·591	+ 3	20		25·38	0	15
l $8^m.3$			$2^h\ 11^m$				$+22°\ 8'$			
Berlin c.	88·88	5	$26^s.072$	$.079$	− 25	5	33″·58	33″·79	− 8	3
Leiden c.	88·79	4	26·109	·102	− 5	4	34·24	34·03	+ 17	3
Dublin	88·77	4	26·130	·126	+ 19	2	34·75	34·45	+ 59	2
Cape	88·87	6	26·116	·093	− 12	2	34·12	33·43	− 45	2
Greenwich	88·91	4	26·140	·122	+ 5	2	33·21	33·77	− 10	1
Leipzig	88·81	5	26·150	·099	− 7	2	33·93	33·86	− 1	2
Oxford	88·96	2	26·130	·130	+ 29	1	32·78	32·78	−111	½
Melbourne	88·89	5, 3	26·050	·080	− 28	2	34·30	33·58	− 30	1
Pulkowa	88·92	4	26·181	·191	+ 86	½	33·97	34·02	+ 18	1
		39, 37		26·100	− 7	20½		33·87	− 1	15½
m $6^m.0$			$2^h\ 11^m$				$+19°\ 22'$			
Berlin c.	88·93	8	$53^s.713$	$.720$	+ 20	7	57″·34	57″·55	+ 21	4
Leiden c.	88·80	5	53·726	·719	+ 16	4	57·71	57·50	+ 17	3
Dublin	88·94	5	53·654	·650	− 53	2	57·02	56·72	− 61	2
Cape	88·87	6	53·717	·694	− 7	2	58·02	57·33	− 2	2
Greenwich	88·94	2	53·745	·727	+ 46	1	55·83	56·39	− 95	1
Leipzig	88·77	8	53·732	·681	− 21	2	57·44	57·37	+ 3	2
Oxford	88·89	6	53·743	·743	+ 46	1½	57·37	57·37	+ 1	1
Pulkowa	88·76	12	53·693	·703	+ 2	2	57·58	57·63	+ 32	2
		52		53·702	+ 6	21½		57·34	+ 8	17

Digitized by Google

	Epoch	No. obs.	Right Ascension				Declination			
			orig.	red.	red. Diff. (0ˢ·001)	p	orig.	red.	red. Diff. (0″·01)	p
n $8^{m}\cdot0$			h m 2 12				+ 21° 22′			
Berlin c.	88·90	4	16ˢ·853	·860	+ 12	5	48″·77	48″·98	— 19	3
Leiden c.	88·82	4	16·837	·830	— 21	4	49·19	48·98	— 18	3
Dublin	88·90	4	16·857	·853	+ 2	2	49·60	49·30	+ 14	2
Cape	{88·91 88·92}	7, 6	16·871	·848	— 1	2	49·93	49·24	+ 6	2
Greenwich	89·14	4	16·855	·837	— 20	2	48·50	49·06	— 11	1
Leipzig	88·84	8	16·939	·888	+ 38	2	49·01	48·94	— 23	2
Oxford	88·98	2	16·770	·770	— 75	1	48·77	48·77	— 42	½
Melbourne	88·86	3	16·777	·807	— 45	1½	50·06	49·34	+ 16	1
Pulkowa	88·99	4	16·884	·894	+ 45	½	49·47	49·52	+ 38	1
		40, 39		16·850	— 5	20		49·17	— 9	15½
o $6^{m}\cdot0$			h m 2 12				+ 22° 39′			
Berlin c.	88·91	4	38ˢ·454	·461	— 11	5	2″·27	2″·48	+ 1	3
Leiden c.	88·86	4	38·493	·486	+ 11	4	2·65	2·44	— 2	3
Dublin	88·85	5	38·458	·454	— 21	2	2·88	2·58	+ 12	2
Cape	88·87	6	38·562	·539	+ 66	2	3·50	2·81	+ 33	2
Greenwich	88·83	4	38·445	·427	— 26	2	2·21	2·77	+ 30	1
Leipzig	88·86	6	38·537	·486	+ 12	2	2·23	2·16	— 31	2
Oxford	89·00	1	38·480	·480	+ 11	½	1·91	1·91	— 58	¼
Melbourne	88·92	3, 4	38·463	·493	+ 17	1½	3·43	2·71	+ 23	1
Pulkowa	88·93	4	38·426	·436	— 37	½	2·57	2·62	+ 18	1
		37, 38		38·474	+ 5	19½		2·47	+ 4	15½
p $8^{m}\cdot5$			h m 2 14				+ 19° 36′			
Leiden c.	88·74	4	17ˢ·949	·942	— 22	4	35″·54	35″·33	+ 22	3
Dublin	88·86	5	17·928	·924	— 40	2	35·74	35·44	+ 33	2
Cape	{88·92 88·93}	7, 6	18·006	·983	+ 21	2	35·57	34·88	— 25	2
Greenwich	89·36	5, 4	18·006	·988	+ 11	2	34·40	34·96	— 16	1
Leipzig	88·76	6	18·023	·972	+ 9	2	34·90	34·83	— 29	2
Oxford	88·89	2	17·930	·930	— 28	1	34·24	34·24	— 90	½
Melbourne	{88·92 88·91}	1, 3	18·020	·050	+ 85	½	36·23	35·51	+ 38	1
		30		17·963	— 6	13½		35·12	0	11½
q $7^{m}\cdot8$			h m 2 14				+ 22° 54′			
Berlin c.	88·89	8	53ˢ·874	·881	+ 3	7	47″·43	47″·64	+ 6	4
Leiden c.	88·76	6	53·896	·889	+ 8	5	47·73	47·52	— 5	4
Dublin	88·94	4	53·905	·901	+ 20	2	47·52	47·22	— 35	2
Cape	88·92	6	53·889	·866	— 13	2	48·66	47·97	+ 38	2
Leipzig	88·80	6	53·922	·871	— 9	2	47·12	47·05	— 53	2
Oxford	88·84	3	53·890	·890	+ 12	1	48·13	48·13	+ 53	½
Melbourne	88·87	3, 4	53·847	·877	— 5	1½	49·24	48·52	+ 93	1
Pulkowa	88·77	6	53·851	·861	— 18	1	47·31	47·36	— 19	1
		42, 43		53·880	+ 1	21½		47·58	+ 1	16½

Digitized by Google

	Epoch	No. obs.	Right Ascension				Declination			
			orig.	red.	red. Diff. ($0^s.001$)	p	orig.	red.	red. Diff. ($0''.01$).	p
r 8m.5			2h 17m				+ 20° 54′			
			s	s			″	″		
Berlin c.	88·88	8	29·937	·944	− 25	7	16·34	16·55	− 1	4
Leiden c.	88·81	8	29·983	·976	+ 4	6	16·82	16·61	+ 6	4
Dublin	88·81 / 88·79	4, 5	29·950	·946	− 26	2	17·20	16·90	+ 35	2
Cape	88·87	6	30·021	·998	+ 28	2	16·88	16·19	− 38	2
Greenwich	89·10	6	30·038	·020	+ 35	2	16·24	16·80	+ 24	1
Leipzig	88·80	10	30·046	·995	+ 24	3	16·87	16·80	+ 24	2
Oxford	88·95	1	29·990	·990	+ 21	½	17·77	17·77	+119	¼
Melbourne	88·88	3	29·987	·017	+ 44	1½	16·30	15·58	− 99	1
Pulkowa	88·96	6	29·969	·979	+ 9	1	15·93	15·98	− 55	1
		52, 53		29·971	+ 2	25		16·56	0	17¼
r′ 7m.3			2h 19m				+ 24° 39′			
			s	s			″	″		
Leiden c.	88·71	3	27·401	·394	+ 8	3	11·03	10·82	− 6	3
Dublin	88·80	4	27·345	·341	− 45	2	11·10	10·80	− 9	2
Greenwich	89·46	4	27·433	·415	+ 33	2	10·44	11·00	+ 11	1
Leipzig	88·81	6	27·455	·404	+ 19	2	11·28	11·21	+ 32	2
Pulkowa	88·75	5	27·359	·369	− 15	1	10·52	10·57	− 29	1
		22		27·385	+ 2	10		10·89	+ 3	9
s 7m.8			2h 20m				+ 22° 22′			
			s	s			″	″		
Berlin c.	88·86	4	37·870	·877	− 16	5	27·02	27·23	+ 25	3
Leiden c.	88·78	5	37·899	·892	+ 10	4	26·91	26·70	− 27	3
Dublin	88·85	5	37·978	·974	+ 78	2	27·30	27·00	+ 3	2
Cape	88·85	6	37·902	·879	− 15	2	27·94	27·25	+ 26	2
Greenwich	89·15	5	37·930	·912	+ 13	2	26·48	27·04	+ 6	1
Leipzig	88·79	6	37·947	·896	+ 1	2	26·83	26·81	− 17	2
Oxford	88·92	2	37·920	·920	+ 27	1	26·74	26·74	− 26	½
Melbourne	88·86	3	37·803	·833	− 64	1½	27·35	26·63	− 36	1
Pulkowa	88·81	6	37·826	·836	− 58	1	27·23	27·28	+ 33	1
		42		37·895	0	20½		26·98	+ 1	15½
t 8m.6			2h 21m				+ 24° 7′			
			s	s			″	″		
Berlin c.	88·92	4	53·340	·347	+ 12	5	43·65	43·86	− 34	3
Leiden c.	88·83	5	53·334	·327	− 11	4	44·72	44·51	+ 32	3
Dublin	88·94	4	53·290	·286	− 52	2	44·62	44·32	+ 13	2
Cape	88·88	6	53·317	·294	− 42	2	45·35	44·66	+ 45	2
Leipzig	88·84	6	53·418	·367	+ 30	2	43·97	43·90	− 30	2
Oxford	89·00 / 88·90	1, 2	53·320	·320	− 15	½	44·92	44·92	+ 70	½
Melbourne	88·88	4	53·298	·328	− 21	1½	44·61	43·89	− 32	1
Pulkowa	88·78	5	53·398	·408	+ 72	1	43·80	43·85	− 32	1
		35, 36		53·387	− 2	18		44·20	0	14½

Digitized by Google

	Epoch	No. obs.	Right Ascension				Declination			
			orig.	red.	red. Diff. (0ˢ·001)	p	orig.	red.	red. Diff. (0″·01)	p
u 6ᵐ·0			2ʰ 22ᵐ				+22° 58′			
Berlin c.	88·89	4	50ˢ·516	·523	− 5	5	6″·00	6″·21	+ 3	3
Leiden c.	88·80	4	50·540	·533	+ 2	4	6·39	6·18	+ 1	3
Dublin	88·82	5	50·556	·552	+ 21	2	6·46	6·16	− 1	2
Cape	88·88	6	50·554	·531	+ 2	2	6·70	6·01	− 18	2
Greenwich	88·88	4	50·550	·532	+ 23	2	5·40	5·96	− 22	1
Leipzig	88·78	6	50·547	·496	− 34	2	6·08	6·01	− 17	2
Oxford	88·86	4	50·557	·557	+ 29	1	6·72	6·72	+ 52	1
Melbourne	88·88	3	50·557	·587	+ 55	1½	6·69	5·97	− 22	1
Pulkowa	88·89	5	50·462	·472	− 57	1	6·53	6·58	+ 43	1
		41		50·530	+ 1	20½		6·18	− 2	16
v 7ᵐ·5			2ʰ 22ᵐ				+21° 5′			
Berlin c.	88·91	4	57ˢ·648	·655	+ 2	5	37″·50	37″·71	− 9	3
Leiden c.	88·85	5	57·664	·657	+ 1	4	37·69	37·48	− 31	3
Dublin	88·92	5	57·672	·668	+ 12	2	38·20	37·90	+ 11	2
Cape	88·89	6	57·712	·689	+ 35	2	38·58	37·89	+ 8	2
Greenwich	89·21	4	57·690	·672	+ 17	2	37·40	37·96	+ 16	1
Leipzig	88·84	7	57·716	·665	+ 10	2	38·17	38·10	+ 30	2
Oxford	88·91	2	57·620	·620	− 33	1	37·37	37·37	− 45	½
Melbourne	88·86	3	57·583	·613	− 44	1½	38·28	37·56	− 25	1
Pulkowa	88·96	4	57·601	·611	− 43	½	38·72	38·77	+100	1
		40		57·655	+ 2	20		37·80	− 1	15½
w 6ᵐ·2			2ʰ 24ᵐ				+24° 44′			
Berlin c.	88·92	8	5ˢ·800	·807	+ 17	7	17″·10	17″·31	− 13	4
Leiden c.	88·83	6	5·795	·788	− 5	5	17·20	16·99	− 44	4
Dublin	88·91	6	5·787	·783	− 10	3	17·77	17·47	+ 4	2
Cape	88·89	6	5·833	·810	+ 19	2	18·05	17·36	− 9	2
Greenwich	89·33	5	5·765	·747	− 27	2	17·21	17·77	+ 33	1
Leipzig	88·81	8	5·815	·764	− 28	2	17·85	17·78	+ 34	2
Oxford	88·80	2, 3	5·750	·750	− 40	1	17·28	17·28	− 18	½
Melbourne	88·90	3	5·807	·837	+ 43	1½	18·88	18·16	+ 71	1
Pulkowa	88·76	8	5·794	·804	+ 13	1	17·29	17·34	− 7	2
		52, 53		5·792	+ 1	24½		17·44	− 6	18½
w′ 8ᵐ·0			2ʰ 26ᵐ				+21° 50′			
Leiden c.	88·72	3	1ˢ·664	·657	− 14	3	16″·81	16″·60	− 16	3
Dublin	88·81	4	1·665	·661	− 10	2	17·15	16·85	+ 9	2
Greenwich	88·88	4	1·685	·667	− 10	2	15·93	16·49	− 28	1
Leipzig	88·77	5	1·710	·659	− 11	2	17·02	16·95	+ 18	2
Oxford	88·89	3	1·740	·740	+ 75	1	17·26	17·26	+ 47	½
Pulkowa	88·74	2	1·710	·720	+ 51	½	17·15	17·20	+ 46	½
		21		1·670	+ 4	10½		16·77	− 3	9

Digitized by Google

	Epoch	No. obs.	Right Ascension orig.	red.	red. Diff. (0s·001)	p	Declination orig.	red.	red. Diff. (0″·01)	p
x 8m·2			2h 28m				+ 24° 24′			
Berlin c.	88·91	8	11s·810	·817	+ 1	7	3″·67	3″·88	0	4
Leiden c.	88·80	5	11·819	·812	— 7	4	4·28	4·07	+ 20	3
Dublin	88·83	4	11·857	·853	+ 34	2	3·42	3·12	— 75	2
Cape	88·88	6	11·777	·754	— 63	2	4·60	3·91	+ 2	2
Greenwich	89·43	4	11·890	·872	+ 44	2	3·11	3·67	— 21	1
Leipzig	88·81	8	11·855	·804	— 14	2	3·99	3·92	+ 4	2
Oxford	88·95	3, 4	11·793	·793	— 23	1	4·02	4·02	+ 12	1
Melbourne	88·90	4	11·785	·815	— 5	1½	5·50	4·78	+ 89	1
Pulkowa	88·77	7	11·799	·809	— 8	1	3·36	3·41	— 44	1
		49, 50		11·818	— 3	22½		3·88	— 1	17
y 8m·1			2h 28m				+ 22° 28′			
Berlin c.	88·86	4	16s·609	·616	+ 5	5	34″·38	34″·59	+ 19	3
Leiden c.	88·82	5	16·622	·615	+ 1	4	34·59	34·38	— 1	3
Dublin	88·89	4	16·622	·618	+ 4	2	34·95	34·65	+ 26	2
Cape	88·88 / 88·89	7, 6	16·657	·634	+ 22	2	35·12	34·43	+ 2	2
Greenwich	89·20	4	16·630	·612	— 9	2	33·59	34·15	— 25	1
Leipzig	88·82	6	16·673	·622	+ 9	2	34·47	34·40	0	2
Oxford	88·90	3	16·610	·610	+ 2	1	34·95	34·95	+ 53	½
Melbourne	88·86	3	16·577	·607	— 8	1½	34·92	34·20	— 21	1
Pulkowa	88·91	7	16·579	·589	— 23	1	33·86	33·91	— 46	1
		43, 42		16·613	+ 2	20½		34·40	+ 3	15½
z 7m·6			2h 30m				+ 22° 33′			
Berlin c.	88·90	4	18s·659	·666	+ 10	5	48″·82	49″·03	— 7	3
Leiden c.	88·81	5	18·652	·645	— 12	4	49·46	49·25	+ 16	3
Dublin	88·90	6	18·667	·663	+ 4	3	49·58	49·28	+ 19	2
Cape	88·91	6	18·657	·634	— 23	2	49·80	49·11	0	2
Greenwich	88·93	3, 4	18·680	·662	+ 3	2	48·36	48·92	— 18	1
Leipzig	88·81	8	18·715	·664	+ 6	2	49·24	49·17	+ 7	2
Oxford	88·85 / 88·83	2, 3	18·670	·670	+ 17	1	49·06	49·06	— 6	½
Melbourne	88·91	2, 3	18·765	(·795)			49·80	49·08	— 3	1
Pulkowa	88·90	6	18·570	·580	— 77	1	48·65	48·70	— 37	1
		(42) 40, 45		18·658	— 4	20		49·10	0	15½
α 7m·0			2h 30m				+ 24° 9′			
Berlin c.	88·87	4	32s·936	·943	+ 2	5	33″·13	33″·34	+ 22	3
Leiden c.	88·83	5	32·929	·922	— 22	4	33·25	33·04	— 7	3
Dublin	88·91	5	32·970	·966	+ 22	2	33·32	33·02	— 9	2
Cape	88·86	5	33·014	·991	+ 49	2	33·57	32·88	— 25	2
Leipzig	88·81	6	32·962	·911	— 32	2	33·35	33·28	+ 16	2
Oxford	89·00	1	32·920	·920	— 18	½	33·56	33·56	+ 42	¼
Melbourne	88·89	2	32·920	·950	+ 5	1	33·48	32·76	— 37	1
Pulkowa	88·76	8	32·941	·951	+ 9	1	33·24	33·29	+ 20	2
		36		32·943	+ 1	17½		33·12	+ 2	15½

Digitized by Google

	Epoch	No. obs.	Right Ascension				Declination			
			orig.	red.	red. Diff. ($0^s.001$)	p	orig.	red.	red. Diff. ($0''.01$)	p
β 8m.3			2h 31m				+ 22° 38′			
			s	s			″	″		
Berlin c.	88·84	4	25·280	·287	− 13	5	33·44	33·65	+ 9	3
Leiden c.	88·78	6	25·313	·306	+ 3	5	33·93	33·72	+ 17	4
Dublin	88·95	5	25·318	·314	+ 11	2	33·86	33·56	+ 1	2
Cape	88·86	6	25·312	·289	− 12	2	34·31	33·62	+ 5	2
Greenwich	89·31	5	25·376	·358	+ 45	2	33·26	33·82	+ 26	1
Leipzig	88·80	7	25·356	·305	+ 3	2	33·13	33·06	− 50	2
Oxford	88·88	2	25·345	·345	+ 48	½	34·31	34·31	+ 73	½
Melbourne	88·86	3	25·250	·280	− 24	1½	33·82	33·10	− 47	1
Pulkowa	88·85	6, 7	25·268	·278	− 23	1	33·61	33·66	+ 13	1
		44, 45		25·302	+ 1	21		33·56	− 1	16½

The originals of this and of the next following general table, and of the corresponding tables for the *Victoria* and the *Sappho* stars, were drawn up by degrees, as the several series of observations were received. In order to secure accuracy and avoid unnecessary difficulty in comparing the proof sheets with the original computations, this accidental order was preserved in all general tables, while the special discussion of the separate series, preceding the general tables, were put, for easy reference, into the alphabetical order of the contributing observatories.

Arranging in order of the star's magnitude the differences from the means N_1 of the Right Ascensions preliminarily reduced by the constant corrections given above, the mean deviation from the normals is found for four groups comprising the stars from magnitude 5·5 to 6·2, 6·8 to 7·3, 7·5 to 7·8, 8·0 to 8·6 respectively (6, 6, 8 and 10 stars respectively in those series which contain all of the 30 stars), as follows :—

Mean Deviation from N_1, and No. of Stars Observed.

Mean* Mag.	Berlin c.	Leiden c.	Dublin	Cape	Greenwich	Leipzig	Oxford	Melbourne	Pulkowa
	s	s	s	s	s	s	s	s	s
5·95	+0·003 (6)	+0·011 (6)	−0·014 (6)	+0·006 (6)	−0·023 (6)	−0·027 (6)	+0·001 (6)	+0·025 (5)	−0·003 (6)
7·10	−0·006 (4)	−0·002 (6)	−0·003 (6)	−0·001 (4)	−0·003 (5)	+0·016 (4)	−0·018 (4)	+0·000 (4)	+0·001 (6)
7·65	+0·001 (8)	0·000 (8)	+0·019 (8)	+0·001 (8)	−0·004 (7)	−0·005 (8)	−0·008 (6)	+0·004 (8)	−0·023 (6)
8·30	−0·007 (7)	−0·004(10)	−0·003(10)	−0·005 (9)	+0·016 (9)	+0·005(10)	−0·002(10)	−0·002 (9)	+0·023(10)

* For complete groups.

These means have been taken from the observed stars without distinguishing weights ; for Melbourne, however, in the third group the unusually large difference for star **z** may, with advantage, be excluded ; the mean for the group then becomes $-0^s.015$.

In the differences of the Greenwich Right Ascensions a well marked progression with magnitude is shown ; the differences can be satisfactorily represented by the

Digitized by Google

expression $+0^s\cdot014$ (magnitude $-7\cdot5$), which reduces the outstanding mean differences for the four groups to $-0^s\cdot002$, $+0^s\cdot003$, $-0^s\cdot006$, $+0^s\cdot005$. The correction $-0^s\cdot014$ (M $-7\cdot5$), therefore, was applied to the Greenwich results already diminished by $0^s\cdot018$.

In the other series no outstanding variation with magnitude is clearly shown; only small constant corrections, therefore, were still applied to the "reduced R.A." of the table in order to make the mean deviation from N_1 again zero in the mean of all stars contained in the series, giving the same weight to them all, viz.:— Berlin corr., $+0^s\cdot002$; Leiden corr., $-0^s\cdot001$; Dublin, $-0^s\cdot001$; Cape, $+0^s\cdot001$; Oxford, $+0^s\cdot005$; Melbourne, $-0^s\cdot002$ (z excluded); Pulkowa, $+0^s\cdot001$.

The values for the Cape and for Melbourne are affected by a slight error in one position each and should have been zero; the latter however would have been $-0^s\cdot006$, retaining z. For Leipzig the mean outstanding difference was zero.

In the Declinations no systematic variations comparable with those which might be expected in R.A. occur, and a magnitude equation not being probable, no corresponding grouping was made of the differences "Dec. red. – Mean N_1." A simple mean was, therefore, taken from each series, giving the further corrections to the reduced Declinations:— Leiden, Dublin, $+0''\cdot01$; Cape, Melbourne, $-0''\cdot01$; Oxford, $-0''\cdot02$; Pulkowa, $+0''\cdot03$; for Berlin, Greenwich, and Leipzig, the mean at once became zero.

The sums of the excesses of the separate values "R.A. red." and "Dec. red." over the normal values N_1, with these supplementary corrections, are given in the columns "red. Diff." of the preceding table.

Disregarding the insignificant secondary corrections, the average deviation from the mean N_1 was found in the separate series as follows:—

Series	Average Deviation from Mean		Average No. of Obs.	No. Stars	Mean Intrinsic Error corresponding to average no. of observations	
	R.A.	Dec.			R.A.	Dec.
Berlin	$0^s\cdot0100$	$0''\cdot124$	4·7·	25	$\pm 0^s\cdot0110$	$\pm 0''\cdot138$
Leiden	0·0124	0·148	4·7	30	0·0129	0·179
Dublin	0·0205	0·246	4·7	30	0·0203	0·304
Cape	0·0253	0·237	6·0	27	0·0365	0·310
Greenwich	0·0250	0·260	4·4	27	0·0286	0·262
Leipzig	0·0211	0·240	5·9	30	0·0226	0·263
Oxford	0·0315	0·470	2·2; 2·5	24	0·0411	0·417
Melbourne	0·0282	0·367	3·1	25	0·0278	0·449
Pulkowa	0·0314	0·366	6·5	28	0·0289	0·337

Digitized by Google

Taking into account the proportion in which each series had entered into the means N_1, the weights of the results based upon the average number of observations corresponding to each series were estimated from these numbers, and conveniently modified whenever the number of observations was less or greater than the usual number, as follows :—

Series	Normal Weight	adopted for obs.	Modified Weights
Berlin	R.A. 5 Dec. 5	4 or 5	6 or 7 obs. w. 6 ; 8 obs. w. 7
Leiden	4 4	4 „ 5	2 obs. 2 ; 3 obs. 3 ; 6 or 7 obs. 5 ; 8 obs. 6
Dublin	2 2	3 to 5	6 to 8 obs. w. 3
Cape	2 2	5 „ 8	4 obs. w. 1
Greenwich	2 2	3 „ 6	2 obs. w. 1 ; 7 obs. w. 3
Leipzig	2 2	5 „ 8	6 and more obs. w. 3
Oxford	1 ½	2 „ 4	R.A. 1 obs. ½ ; 6 obs. 1½ ; Dec. half these w.
Melbourne	1½ 1	3 or 4	R.A. 1 obs. ½ ; 2 obs. 1, 5 obs. 2 ; Dec. 1 obs. ½, 2 obs. 1
Pulkowa	1 1	5 to 9	2 to 4 obs. w. ½ ; 10 and more obs. w. 2

With these weights given under the heading "p", means were formed from the "reduced Differences," which are given at the foot of the column named, and were used as corrections to the first normals N_1 to give new normals N_2. These means, however, given with the table and actually used, are slightly different—to the extent of 1, 2, or exceptionally 3 units of the last decimal places—from those which would rigorously result from the numbers given in the columns "red. Diff." and "p" of the table, mainly for the reason that in forming them the Greenwich results from 1888 only had been used—those of 1889 and 1890 being received afterwards—and the Oxford results as derived in a preliminary discussion in which some errors had been made. The new normals N_2 actually used, however, were quite sufficient for the use made of them, viz., to investigate more closely the accuracy of the separate series and the systematic variations which might occur within them.

To avoid the great variety of numbers to be used as weights (ranging from $\frac{1}{4}$ to 7 in the preceding discussion), which would result if the relative accuracy of the different series were at once taken into account in this investigation, and the same amount of "mean error" retained as corresponding to the unity of weights throughout, new weights p' were assumed which denote relative weights only of the separate results within the series to which they belong ; viz.:—

Berlin	4 or 5 obs. $p' = 3$; 8 obs. $p' = 4$	aver. w. $p' =$ 3·32	aver. w. p : α 5·56 δ 3·28
Leiden	2 obs., 2 ; 3 or 4 obs., 3 ; 5 to 8 obs., 4	3·57	4·00 3·13
Dublin	4 obs., 3 ; 5 to 7 obs., 4	α 3·50, δ 3·47	2·20 2·03
Cape	4 obs., 3 ; 5 to 7 obs., 4	3·96	1·96 2·00
Greenwich	2 obs., 2 ; 3 or 4, 3 ; 5 to 7, 4	α 3·37, δ 3·41	2·04 1·15

Digitized by Google

Leipzig	5 to 8 obs., 4 ; 10 obs., 5	aver. w. $p' =$ 4·03	aver. w. p : α 2·03 δ 2·00
Oxford	1 obs., 1 ; 2, 2 ; 3 or 4, 3 ; 6 obs., 4	α 2·12, δ 2·40	0·79 0·51
Melbourne	1 obs., 1 ; 2, 2 ; 3 or 4, 3 ; 5 obs., 4	α 2·92, δ 3·00	1·46 2·00
Pulkowa	2 obs., 2 ; 4 obs., 3 ; 5 to 8, 4 ; 12 obs., 5	α 3·68, δ 3·64	0·93 1·05

The average values of the weights p which have been used in the preceding discussion, are here added, and these numbers, combined with the sum of all (p, 20·97 for R.A., 17·15 for Dec.) made use of in the following table to derive the mean error from the sums of the squares of the differences. The actual average Σpvv are smaller because of the incompleteness of six out of the nine series, viz., 19·2 for R.A. and 15·1 for Dec., but it was quite sufficient to employ the above numbers, which are strictly valid only for complete series.

Determination of Mean Errors.

Series	No. of Stars	Right Ascension					Declination				
		Sum of Squares	Factor	Square of M. E.	Mean Error for		Sum of Squares	Factor	Square of M. E.	Mean Error for	
					$p' = 1$	aver. p'				$p' = 1$	aver. p'
					s	s				″	″
Berlin	25	12340	1·360	699	±0·024	±0·0145	15536	1·236	800	±0·28	±0·155
Leiden	30	16985	1·236	711	0·027	0·0141	34386	1·225	1453	0·38	0·202
Dublin	30	85029	1·117	3275	0·057	0·0306	103814	1·134	4057	0·64	0·342
Cape	27	96080	1·104	4079	0·064	0·0321	99764	1·132	4347	0·66	0·331
Greenwich	27	61633	1·108	2731	0·052	0·0285	85386	1·074	3530	0·59	0·322
Leipzig	30	94028	1·107	3588	0·060	0·0298	94744	1·132	3699	0·61	0·285
Oxford	26	81028	1·039	3367	0·058	0·0399	143790	1·030	5925	0·77	0·497
Melbourne	25, 26	83892	1·075	3757	0·061	0·0359	175267	1·132	7941	0·89	0·509
Pulkowa	28	160194	1·046	6206	0·079	0·0411	193257	1·065	7615	0·87	0·458

The columns "Sum of Squares" contain the sum of the squares of the differences from N_2 already multiplied by the weights $p' = \Sigma p'vv$, and the numbers in the columns "Factor" give the factors for R.A. and Dec. respectively, by which the values of $\frac{\Sigma p'vv}{n-m}$ were multiplied to obtain the square of mean error for the unity of weights p' belonging to the series (n = number of stars, m = number of quantities determined from them — 2 for Greenwich, 1 in each of the other series).

The results contained in this table have been used in connection with the corresponding results for the *Victoria* and *Sappho* stars in the final determination of weights, which will be treated in a separate chapter.

Arranging in order of brightness the outstanding differences with the normals N_2, viz., the excesses of the numbers given in the columns headed "red. Diff." of the Table, pp. 438–446, over their means as given for each star at the foot of the column ;

Digitized by Google

grouping as was done above, p. 446, and taking means with regard to the weights p', the following numbers were found :—

No. of Stars,	Limits and Means of Magnitude for complete groups	Mean Deviation in Right Ascension									Mean Deviation in Declination								
		Berlin	Leiden	Dublin	Cape	Greenwich	Leipzig	Oxford	Melbourne	Pulkowa	Berlin	Leiden	Dublin	Cape	Greenwich	Leipzig	Oxford	Melbourne	Pulkowa
6	5·5 to 6·2 5·95	+5 21	+7 21	−17 23	+4 24	− 6 17	−22 24	+10 15	+22 15	− 5 21	+4 21	− 1 21	− 3 24	+ 3 24	−13 17	− 7 23	− 2 16	+18 15	+ 8 24
6	6·8 „ 7·3 7·10	−2 12	−6 22	− 2 21	+1 16	+ 2 18	+16 24	− 5 9	0 11	+ 1 23	−7 12	− 2 22	−17 21	−31 16	+31 18	+19 24	− 4 10	+10 11	+11 23
8	7·5 „ 7·8 7·65	+3 26	−1 30	+19 29	+3 31	− 8 26	− 5 32	+ 1 11	−18 21	−24 28	+3 26	−11 30	+ 6 29	+15 31	+ 3 26	− 4 32	− 9 13	− 5 25	−10 27
10	8·0 „ 8·6 8·30	−4 24	−4 34	− 3 32	−2 36	+10 39	+ 7 40	+ 6 29	− 9 26	+23 28	−6 24	+11 34	+ 7 32	− 3 36	− 1 29	− 4 41	+15 21	− 7 28	−13 28

The numbers of this table having signs prefixed to them mean $0^s{\cdot}001$ and $0''{\cdot}01$ respectively, and the numbers attached to them in small type are the corresponding sums of the weights p'.

For Declination, the preceding numbers further furnish the following means for the first two and for the last two groups taken together, as also their weights, and the general means :—

	Berlin	Leiden	Dublin	Cape	Greenwich	Leipzig	Oxford	Melbourne	Pulkowa
Mean Mag. 6·5	0″·00 33	− 0″·02 43	− 0″·11 45	− 0″·11 40	+ 0″·11 35	+ 0″·06 47	− 0″·03 26	+ 0″·15 26	+ 0″·10 47
„ „ 8·0	− 0·01 50	+ 0·01 64	+ 0·07 61	+ 0·05 67	+ 0·01 55	− 0·04 73	+ 0·06 34	− 0·06 53	− 0·11 55
General Mean	− 0·006	− 0·004	0·000	− 0·007	+ 0·044	0·000	+ 0·020	+ 0·008	− 0·017

Perhaps the larger of the differences of the means for $6^m{\cdot}5$ and $8^m{\cdot}0$ are not altogether accidental. For Dublin it has been noticed before that the Declinations as observed were $0''{\cdot}36$ to the north of the three other series of Declinations referred to the same fundamental system. If this be the effect of the difference of magnitude between the standard stars, of $3^m{\cdot}6$, and the *Iris* stars, of mean magnitude 7·4, the variation of $0''{\cdot}18$ from $6^m{\cdot}5$ to $8^m{\cdot}0$ would quite agree with the progression. But it is seen from the weights of the means and the mean errors determined in the above table for $p' = 1$, that the largest variations only just reach or scarcely surpass their mean error. Such corrections were therefore neglected, and the system of constant reductions to the Declinations finally adhered to for all these series.

For R.A. the means in the four groups yield the following formulæ :—

Berlin $- N_2 =$ $0^s{\cdot}0000 - 0^s{\cdot}0032$ (M−7·5) (w. 67)
Leiden „ $= - 0{\cdot}0014 - 0{\cdot}0039$ „ (w. 82)
Dublin „ $= + 0{\cdot}0012 + 0{\cdot}0079$ „ (w. 87)
Cape „ $= + 0{\cdot}0012 - 0{\cdot}0020$ „ (w. 87)
Greenw. „ $= + 0{\cdot}0008 + 0{\cdot}0054$ „ (w. 66)

Leipzig $- N_2 =$ $+ 0^s{\cdot}0008 + 0^s{\cdot}0103$ (M−7·5) (w. 89)
Oxford „ $= + 0{\cdot}0040 - 0{\cdot}0014$ „ (w. 53)
Melb. „ $= + 0{\cdot}0036 - 0{\cdot}0133$ „ (w. 55)
Pulk. „ $= - 0{\cdot}0010 + 0{\cdot}0055$ „ (w. 82)

Digitized by Google

The weights — in units of p' — of the second term in these formulæ are given and show that the co-efficient only seldom exceeds the mean error of the determination. Nevertheless, to carry through the computations on a uniform system, all of these formulæ were adopted, and the resulting reductions combined with the reductions already applied.

Finally, it was considered best to go back here and in the discussion of the *Victoria* and *Sappho* stars to one and the same definite well established system of Right Ascensions — for which the Berlin R.A. corrected for magnitude by Dr. Küstner's formula were chosen — and afterwards to determine, from all available material, the most probable correction required for this system in order to agree with the Right Ascensions of the A.G.C. The Declinations were referred back to the system of the Berlin series, which certainly represents the nearest the system of the A.G.C. Declinations. In the three other series directly referred to this system the observations are of less intrinsic accuracy; the Pulkowa instrument has been used in one position only, in the Leipzig series only one diameter of the circle was read, and the Dublin series exhibits traces of magnitude equation.

The correction of Dr. Küstner's R.A. system was found, for magnitudes comprised within the limits 5·0 and 9·0 = $+0^s{\cdot}0060 + 0^s{\cdot}0015\ (M - 8{\cdot}0)$. This will be shown afterwards. Making use however at once of this correction, from all the preceding investigations the total reduction to the A.G.C. system becomes, for the Berlin means as formed pp. 413–414 with addition of the corrections $\Delta\alpha$ tabulated p. 416, for the other positions as given in the tables of final means, pp. 420–436 :—

	$\Delta\alpha$ (units $0^s{\cdot}001$)			$\Delta\delta$		$\Delta\alpha$ (units $0^s{\cdot}001$)			$\Delta\delta$
For Berlin*	+ 6·0	+ 1·5	(M − 8)	0·00	For Leipzig	− 61·5·	−12·0	(M − 8)	− 0·29
„ Leiden*	− 9·2·	+ 2·2	„	− 0·41	„ Oxford	+ 0·1	− 0·3	„	− 0·28
„ Dublin	− 14·7·	− 9·6	„	− 0·50	„ Melbourne	+ 33·6·	+11·6	„	− 0·97
„ Cape	− 26·8	+ 0·3	„	− 0·92	„ Pulkowa	+ 4·6·	− 7·2	„	− 0·09
„ Greenwich	− 33·1	−21·1	„	+ 0·31					

* With magnitude correction as adopted by the observer.

These reductions were used to determine the final values. Before they were derived, the $\Delta\delta$ of the last approximation (red. Dec. $- N_2$) were arranged in order of Declination, and the following means found for five groups :—

No.St.*	Declination from	Declination mean*	Berlin	Leiden	Dublin	Cape	Greenwich	Leipzig	Oxford	Melbourne	Pulkowa
	° °	°	′	′	′	′	′	′	′	′	′
3	16·7 to 17·7	17·3	− 0·21$_2$	+ 0·07	− 0·26	− 0·45$_2$	+ 0·28	+ 0·14	− 0·09	+ 0·18$_2$	+ 0·28
6	19·0 „ 20·1	19·5	+ 0·07	+ 0·06	+ 0·04	+ 0·10	− 0·02	− 0·19	− 0·37$_4$	− 0·16$_5$	− 0·05$_5$
7	20·7 „ 21·8	21·2	− 0·04$_5$	− 0·05	+ 0·03	− 0·11$_6$	+ 0·03	+ 0·20	+ 0·04	− 0·10$_6$	0·00$_6$
9	22·1 „ 23·0	22·5	+ 0·03	− 0·03	+ 0·11	+ 0·06	− 0·02$_8$	− 0·15	+ 0·18$_8$	− 0·02	− 0·01
5	24·1 „ 24·7	24·4	− 0·05$_4$	0·00	− 0·13	+ 0·05$_4$	+ 0·12	+ 0·12	+ 0·20$_4$	+ 0·30$_4$	− 0·18

* In complete groups.

Digitized by Google

There are traces of regular progression in some of the series, but nowhere do they exceed the mean errors, and can be neglected altogether.

Applying the finally established reductions to the results of the separate series as first reduced to homogeneity within the series, and combining the definitively reduced results which in the following table are given in the columns R.A. and Dec. in Normal System, with such weights as were finally determined by the discussion contained in a chapter to be given below, and which are given in the column "W." of the table, the determinations for epoch ultimately become those contained in this table :—

Star	Observer	R.A. in N.S.	W.	Diff.	Dec. in N.S.	W.	Diff.
		s			″		
a′	Ln	34·005	4·5	+ 13	52·24	1·7	+ 10
	D	33·976	1 4	— 16	51·94	1·2	— 20
	G	·971	1·2	— 21	52·61	0·9	+ 47
	Lg	·992	1·5	0	·16	1·0	+ 2
	O	·963	0·7	— 29	51·74	0·7	— 40
	P	34·020	0·5	+ 28	·93	0·5	— 21
		33·992	9·8		52·14	6·0	
a	B	3·909	9·7	+ 9	25·39	3·6	+ 7
	Ln	·880	5·3	— 20	·33	2·0	+ 1
	D	·906	1·3	+ 6	·33	1·0	+ 1
	C	·869	0·7	— 31	·63	0·9	+ 31
	G	·881	1·1	— 19	·38	0·8	+ 6
	Lg	·930	1·5	+ 30	·18	1·0	— 14
	M	·903	0·9	+ 3	24·37	0·4	— 95
	P	·894	0·4	— 6	25·11	0·4	— 21
		3·900	20·9		25·32	10·1	
b	B	37·006	6·1	— 13	43·54	2·5	— 24
	Ln	·026	4·5	+ 7	·97	2·0	+ 19
	D	·034	1·3	+ 15	·22	0·9	— 56
	C	36·988	0·8	— 31	·49	1·0	— 29
	G	37·005	1·2	— 14	44·14	0·9	+ 36
	Lg	·065	1·5	+ 46	43·98	1·0	+ 20
	O	36·950	0·5	— 69	·51	0·7	— 27
	M	37·068	1·2	+ 49	44·64	0·6	+ 86
	P	36·981	0·4	— 38	·17	0·5	+ 39
		37·019	17·5		43·78	10·1	

Star	Observer	R.A. in N.S.	W.	Diff.	Dec. in N.S.	W.	Diff.
		s			″		
c	B	13·887	6·1	+ 2	54·38	2·5	— 16
	Ln	·875	5·3	— 10	·54	2·0	0
	D	·877	1·1	— 8	·72	0·8	+ 18
	C	·859	0·8	— 26	53·93	1·0	— 61
	G	·879	0·7	— 6	54·42	0·5	— 12
	Lg	·950	1·5	+ 65	·80	1·0	+ 26
	O	·937	0·7	+ 52	·87	0·9	+ 33
	M	·810	0·9	— 75	·40	0·4	— 14
	P	·928	0·4	+ 43	55·58	0·4	+ 104
		13·885	17·5		54·54	9·5	
d	B	29·875	6·1	+ 2	1·45	2·5	— 4
	Ln	·862	3·5	— 11	·62	1·4	+ 13
	D	·882	1·1	+ 9	2·02	0·8	+ 53
	C	·924	0·6	+ 51	1·45	0·9	— 4
	G	·877	1·0	+ 4	·77	0·7	+ 28
	Lg	·856	1·3	— 17	·05	0·9	— 44
	O	·820	0·3	— 53	·02	0·5	— 47
	M	·881	0·9	+ 8	·22	0·4	— 27
	P	·893	0·4	+ 20	·58	0·4	+ 9
		29·873	15·2		1·49	8·5	
e	B	25·068	6·1	— 9	17·79	2·5	+ 25
	Ln	·088	4·5	+ 11	·53	1·7	— 1
	D	·068	1·2	— 9	·67	0·8	+ 13
	C	·078	0·6	+ 1	18·26	0·8	+ 72
	G	·096	0·7	+ 19	16·90	0·5	— 64
	Lg	·091	1·7	+ 14	17·04	1·1	— 50
	O	·041	0·5	— 36	·03	0·5	— 51
	M	·033	0·9	— 44	·66	0·4	+ 12
	P	·150	0·4	+ 73	·03	0·4	— 51
		25·077	16·6		17·54	8·7	

Digitized by Google

Star	Observer	R.A. in N.S.	W.	Diff.	Dec. in N.S.	W.	Diff.
		s			"		
f	B	6·040	6·1	+ 6	56·94	3·6	+ 12
	Ln	·046	3·5	+ 12	·71	1·4	— 11
	D	·024	1·1	— 10	·60	0·8	— 22
	C	·008	0·5	— 26	·93	0·6	+ 11
	G	·002	1·2	— 32	·70	0·8	— 12
	Lg	·019	1·5	— 15	57·13	1·0	+ 31
	O	·040	0·3	+ 6	56·54	0·3	— 28
	M	·028	0·9	— 6	·99	0·4	+ 17
	P	·050	0·4	+ 16	55·81	0·4	— 101
		6·034	15·5		56·82	9·3	
g	Ln	2·896	2·5	+ 31	26·22	1·0	+ 8
	D	·877	1·1	+ 12	25·55	0·8	— 59
	C	·885	0·7	+ 20	26·19	0·8	+ 5
	G	·809	0·7	— 56	·36	0·5	+ 22
	Lg	·832	1·5	— 33	·43	1·0	+ 29
	O	·850	0·3	— 15	25·68	0·3	— 46
	M	·852	0·9	— 13	26·34	0·4	+ 20
		2·865	7·7		26·14	4·8	
h	B	31·850	9·7	+ 4	3·39	3·6	— 8
	Ln	·855	6·9	+ 9	·68	2·5	+ 21
	D	·856	1·1	+ 10	·66	0·9	+ 19
	C	·794	0·7	— 52	2·87	0·9	— 60
	G	·815	0·5	— 31	3·35	0·4	— 12
	Lg	·803	1·8	— 43	·62	1·1	+ 15
	O	·854	0·7	+ 8	·44	0·7	— 3
	M	·848	0·9	+ 2	·45	0·4	— 2
	P	·858	0·6	+ 12	·53	0·8	+ 6
		31·846	22·9		3·47	11·3	
i	B	38·870	6·1	— 2	21·82	2·5	— 7
	Ln	·858	5·3	— 14	·72	2·0	— 17
	D	·888	1·1	0	·90	0·8	+ 1
	C	·892	0·7	+ 20	·80	0·9	— 9
	G	·900	1·0	+ 28	22·43	0·7	+ 54
	Lg	·885	1·5	+ 13	·14	1·0	+ 25
	M	·901	0·9	+ 29	21·74	0·4	— 15
	P	·866	0·4	— 6	·93	0·5	+ 4
		38·872	17·0		21·89	8·8	

Star	Observer	R.A. in N.S.	W.	Diff.	Dec. in N.S.	W.	Diff.
		s			"		
k	B	39·599	6·1	+ 8	25·17	2·5	+ 1
	Ln	·602	5·3	+ 11	24·87	2·0	— 29
	D	·601	1·3	+ 10	25·37	1·0	+ 21
	C	·625	0·7	+ 34	·31	0·9	+ 15
	G	·543	1·0	— 48	·03	0·7	— 13
	Lg	·531	1·5	— 60	·50	1·0	+ 34
	M	·598	0·9	+ 7	·17	0·4	+ 1
	P	·576	0·4	— 15	24·96	0·4	— 20
		39·591	17·2		25·16	8·9	
l	B	26·078	7·2	— 15	33·58	2·9	— 1
	Ln	·100	4·5	+ 7	·83	1·7	+ 24
	D	·112	1·1	+ 19	34·25	0·8	+ 65
	C	·089	0·7	— 4	33·20	0·9	— 39
	G	·101	0·9	+ 8	·52	0·6	— 7
	Lg	·085	1·3	— 8	·64	0·9	+ 5
	O	·130	0·5	+ 37	32·50	0·5	— 109
	M	·087	1·5	— 6	33·33	0·4	— 26
	P	·183	0·4	+ 90	·88	0·4	+ 29
		26·093	18·1		33·59	9·1	
m	B	53·716	9·7	+ 4	57·34	2·5	+ 19
	Ln	·712	5·3	0	·30	2·0	+ 15
	D	·658	1·2	— 54	56·52	0·9	— 63
	C	·690	0·7	— 12	57·10	0·9	— 5
	G	·754	0·5	+ 42	56·14	0·4	— 101
	Lg	·694	1·8	— 18	57·15	1·1	0
	O	·744	1·1	+ 32	·09	1·0	— 6
	P	·712	0·6	0	·49	0·8	+ 34
		53·712	20·9		57·15	9·6	
n	B	16·859	6·1	+ 11	48·77	2·5	— 8
	Ln	·828	4·5	— 20	·78	1·7	— 7
	D	·842	1·1	— 6	49·10	0·8	+ 25
	C	·844	0·8	— 4	·01	0·9	+ 16
	G	·822	0·9	— 26	48·81	0·6	— 4
	Lg	·877	1·8	+ 29	·72	1·1	— 13
	O	·770	0·5	— 78	·49	0·5	— 36
	M	·811	0·9	— 37	49·09	0·4	+ 24
	P	·889	0·4	+ 41	·38	0·4	+ 53
		16·848	17·0		48·85	8·9	

Digitized by Google

Star	Observer.	R.A. in N.S.	W.	Diff.	Dec. in N.S.	W.	Diff.
		s			"		
o	B	38·457	6·1	— 14	2·27	2·5	— 2
	Ln	·479	4·5	+ 8	·24	1·7	— 5
	D	·462	1·2	— 9	·38	0·9	+ 9
	C	·535	0·7	+ 64	·58	0·9	+ 29
	G	·454	0·9	— 17	·52	0·6	+ 23
	Lg	·499	1·5	+ 28	1·94	1·0	— 35
	O	·481	0·3	+ 10	·63	0·3	— 66
	M	·473	0·9	+ 2	2·46	0·6	+ 17
	P	·445	0·4	— 26	·48	0·4	+ 19
		38·471	16·5		2·29	8·9	
p	Ln	17·941	4·5	— 6	35·13	1·7	+ 27
	D	·908	1·2	— 39	·24	0·9	+ 38
	C	·979	0·8	+ 32	34·65	0·9	— 21
	G	·962	1·0	+ 15	·71	0·6	— 15
	Lg	·955	1·5	+ 8	·61	1·0	— 25
	O	·930	0·5	— 17	33·96	0·5	— 90
	M	18·059	0·3	+ 112	35·26	0·4	+ 40
		17·947	9·8		34·86	6·0	
q	B	53·880	9·7	0	47·43	3·6	+ 2
	Ln	·886	6·1	+ 6	·32	2·3	— 9
	D	·892	1·1	+ 12	·02	0·8	— 39
	C	·862	0·7	— 18	·74	0·9	+ 33
	Lg	·863	1·5	— 17	46·83	1·0	— 58
	O	·890	0·7	+ 10	47·85	0·7	+ 44
	M	·878	0·9	— 2	48·27	0·6	+ 86
	P	·858	0·5	— 22	47·22	0·5	— 19
		53·880	21·2		47·41	10·4	
r	B	29·944	9·7	— 20	16·34	3·6	— 4
	Ln	·975	7·5	+ 11	·41	2·7	+ 3
	D	·930	1·1	— 34	·70	0·9	+ 32
	C	·994	0·7	+ 30	15·96	0·9	— 42
	G	·994	1·1	+ 30	16·55	0·8	+ 17
	Lg	·978	2·1	+ 14	·58	1·3	+ 20
	O	·990	0·3	+ 26	17·49	0·3	+ 111
	M	30·026	0·9	+ 62	15·33	0·4	— 105
	P	29·970	0·5	+ 6	·84	0·5	— 54
		29·964	23·9		16·38	11·4	

Star	Observer	R.A. in N.S.	W.	Diff.	Dec. in N.S.	W.	Diff.
		s			"		
r′	Ln	27·390	3·5	+ 4	10·62	1·4	— 8
	D	·337	1·1	— 49	·60	0·8	— 10
	G	·415	0·9	+ 29	·75	0·6	+ 5
	Lg	·402	1·5	+ 16	·99	1·0	+ 29
	P	·369	0·4	— 17	·43	0·5	— 27
		27·386	7·4		10·70	4·3	
s	B	37·876	6·1	— 10	27·02	2·5	+ 24
	Ln	·889	5·3	+ 3	26·50	2·0	— 28
	D	·965	1·2	+ 79	·80	0·9	+ 2
	C	·875	0·7	— 11	27·02	0·9	+ 24
	G	·901	1·0	+ 15	26·79	0·7	+ 1
	Lg	·888	1·5	+ 2	·59	1·0	— 19
	O	·920	0·5	+ 34	·46	0·5	— 32
	M	·834	0·9	— 52	·38	0·4	— 40
	P	·833	0·5	— 53	27·14	0·5	+ 36
		37·886	17·7		26·78	9·4	
t	B	53·347	6·1	+ 14	43·65	2·5	— 33
	Ln	·326	5·3	— 7	44·31	2·0	+ 33
	D	·269	1·1	— 64	·12	0·8	+ 14
	C	·290	0·7	— 43	·43	0·9	+ 45
	Lg	·349	1·5	+ 16	43·68	1·0	— 30
	O	·320	0·3	— 13	44·64	0·5	+ 66
	M	·339	1·2	+ 6	43·64	0·6	— 34
	P	·398	0·4	+ 65	·71	0·5	— 27
		53·333	16·6		43·98	8·8	
u	B	50·519	6·1	— 10	6·00	2·5	+ 2
	Ln	·526	4·5	— 3	5·98	1·7	0
	D	·560	1·2	+ 31	·96	0·9	— 2
	C	·527	0·7	— 2	·78	0·9	— 20
	G	·559	0·9	+ 30	·71	0·6	— 27
	Lg	·509	1·5	— 20	·79	1·0	— 19
	O	·558	0·9	+ 29	6·44	0·9	+ 46
	M	·567	0·9	+ 38	5·72	0·4	— 26
	P	·481	0·4	— 48	6·44	0·5	+ 46
		50·529	17·1		5·98	9·4	

Digitized by Google

Star	Observer	R.A. in N.S.	W.	Diff.	Dec. in N.S.	W.	Diff.
		s			′		
v	B	57·653	6·1	+ 1	37·50	2·5	— 6
	Ln	·654	5·3	+ 2	·28	2·0	— 28
	D	·662	1·2	+ 10	·70	0·9	+ 14
	C	·685	0·7	+ 33	·66	0·9	+ 10
	G	·667	0·9	+ 15	·71	0·6	+ 15
	Lg	·660	1·7	+ 8	·88	1·1	+ 32
	O	·620	0·5	— 32	·09	0·5	— 47
	M	·611	0·9	— 41	·31	0·4	— 25
	P	·609	0·4	— 43	38·63	0·4	+ 107
		57·652	17·7		37·56	9·3	
w	B	5·803	9·7	+ 10	17·10	3·6	— 5
	Ln	·782	6·1	— 11	16·79	2·3	— 36
	D	·790	1·3	— 3	17·27	1·0	+ 12
	C	·806	0·7	+ 13	·13	0·9	— 2
	G	·770	1·0	— 23	·52	0·7	+ 37
	Lg	·775	1·8	— 18	·56	1·1	+ 41
	O	·751	0·5	— 42	·00	0·7	— 15
	M	·834	0·9	+ 41	·91	0·4	+ 76
	P	·812	0·5	+ 19	·20	0·6	+ 5
		5·793	22·5		17·15	11·3	
w′	Ln	1·655	3·5	— 7	16·40	1·4	— 20
	D	·650	1·1	— 12	·65	0·8	+ 5
	G	·652	0·9	— 10	·24	0·6	— 36
	Lg	·648	1·3	— 14	·73	0·9	+ 13
	O	·740	0·7	+ 78	·98	0·7	+ 38
	P	·715	0·2	+ 53	17·06	0·2	+ 46
		1·662	7·7		16·60	4·6	
x	B	11·816	9·7	+ 4	3·67	3·6	0
	Ln	·810	5·3	— 2	·87	2·0	+ 20
	D	·840	1·1	+ 28	2·92	0·8	— 75
	C	·750	0·7	— 62	3·68	0·9	+ 1
	G	·853	0·9	+ 41	·42	0·6	— 25
	Lg	·791	1·8	— 21	·70	1·1	+ 3
	O	·793	0·7	— 19	·74	0·9	+ 7
	M	·821	1·2	+ 9	4·53	0·6	+ 86
	P	·802	0·5	— 10	3·27	0·6	— 40
		11·812	21·9		3·67	11·1	

Star	Observer	R.A. in N.S.	W.	Diff.	Dec. in N.S.	W.	Diff.
		s			′		
y	B	16·615	6·1	+ 3	34·38	2·5	+ 16
	Ln	·613	5·3	+ 1	·18	2·0	— 4
	D	·606	1·1	— 6	·45	0·8	+ 23
	C	·630	0·8	+ 18	·20	0·9	— 2
	G	·605	0·9	— 7	33·90	0·6	— 32
	Lg	·610	1·5	— 2	34·18	1·0	— 4
	O	·610	0·7	— 2	·67	0·7	+ 45
	M	·612	0·9	0	33·95	0·4	— 27
	P	·583	0·5	— 29	·77	0·6	— 45
		16·612	17·8		34·22	9·5	
z	B	18·664	6·1	+ 7	48·82	2·5	— 7
	Ln	·642	5·3	— 15	49·05	2·0	+ 16
	D	·656	1·3	— 1	·08	1·0	+ 19
	C	·630	0·7	— 27	48·88	0·9	— 1
	G	·655	0·7	— 2	·67	0·6	— 22
	Lg	·658	1·8	+ 1	·95	1·1	+ 6
	O	·670	0·5	+ 13	·78	0·7	— 11
	M	·794	0·6	+ 137	·83	0·4	— 6
	P	·578	0·5	— 79	·56	0·5	— 33
		18·657	17·5		48·89	9·7	
α	B	32·940	6·1	+ 6	33·13	2·5	+ 17
	Ln	·918	5·3	— 16	32·84	2·0	— 12
	D	·965	1·2	+ 31	·82	0·9	— 14
	C	·987	0·6	+ 53	·65	0·8	— 31
	Lg	·912	1·5	— 22	33·06	1·0	+ 10
	O	·920	0·3	— 14	·28	0·3	+ 32
	M	·942	0·6	+ 8	32·51	0·3	— 45
	P	·953	0·5	+ 19	33·15	0·6	+ 19
		32·934	16·1		32·96	8·4	
β	B	25·286	6·1	— 11	33·44	2·5	+ 4
	Ln	·304	6·1	+ 7	·52	2·3	+ 12
	D	·301	1·2	+ 4	·36	0·9	— 4
	C	·285	0·7	— 12	·39	0·9	— 1
	G	·336	1·0	+ 39	·57	0·7	+ 17
	Lg	·291	1·7	— 6	32·84	1·1	— 56
	O	·345	0·5	+ 48	34·03	0·5	+ 63
	M	·287	0·9	— 10	32·85	0·4	— 55
	P	·270	0·5	— 27	33·52	0·6	+ 12
		25·297	18·7		33·40	9·9	

Digitized by Google

The unit of weight corresponds to a computed mean error whose square is 0·0010 for R.A. and 0·10 for Dec. The numbers given as "weights" therefore ought to be in R.A. exactly the double those for Dec., if both of the co-ordinates were determined with equal precision; this is very nearly the case for the means, though in the separate series the precision generally differs considerably for the two co-ordinates.

The numbers given in the third columns for R.A. and Dec. in the table are the outstanding errors, viz., the differences of the separate reduced results from their general mean in units of $0^s{\cdot}001$ and $0''{\cdot}01$ respectively, formed without regard to the proper motions, these being quite insensible during the period embraced by the observations for most of the stars, and amounting to 1, 2, or quite exceptionally 3, units of the last decimal place only in a few instances.

The average difference between the new means given in the preceding table (or new normals N_3) from the normals N_2 used in the determination of the mean errors (allowing for a mean systematic difference $-0^s{\cdot}003\ -0''{\cdot}21$) is only $0^s{\cdot}003$ in R.A. and $0''{\cdot}02$ in Dec.; it was unnecessary therefore to repeat the determination of mean errors and relative weights, and the normals N_3 were accepted as the final results of the discussion.

Investigation of Proper Motions.

As the mean epoch of the positions N_3 is quite near to the epoch of the *Iris* observations for which the positions of the stars are required, it is of little importance for the reduction of these observations to investigate the proper motions of the stars. The series of 30 very accurate positions within this zone however may be useful for other purposes; a collection of the previous observations therefore and their reduction to 1888 was made by Dr. de Ball, at the beginning of the year 1890, from all catalogues published up to that date, with the exception of a few unimportant ones which were not accessible to him, and of some annual catalogues then already published but not yet combined into general catalogues which were, or still are, to be expected. It was considered unnecessary to make the collection entirely complete now, because the addition of some positions published within the last four years would be quite useless for the present determination of the proper motions; Bossert's Supplement to the *Histoire Céleste* would add only one observation of star **m** in 1803, which cannot improve the result, the star being well observed already by Bradley and Mayer.

The following table gives the R.A. and Dec. as brought up to 1888, by Dr. de Ball, with Struve's precession, from the catalogues, their positions having been reduced back to true epoch whenever the catalogue place contained an assumed proper motion. The positions used for Lalande were kindly communicated at the request of Dr. de Ball by

Digitized by Google

M. Bossert from his new reduction, which is based upon the original manuscripts of the *Histoire Céleste* and Von Asten's tables; Bessel's places were reduced from the zones by means of the tables contained in part 37 of the Königsberg Observations. The places from Zach, Lalande, Piazzi and Bessel's Zones are given to $0^s{\cdot}01$ and $0''{\cdot}1$, while all the others have one more decimal place; this comes from an accidental difference in computing the precessions, but the superfluous $0^s{\cdot}001$ and $0''{\cdot}01$ were retained in order to have the $0^s{\cdot}01$ and $0''{\cdot}1$ numerically correct in the reduced positions, applying the reductions to the system of the A.G.C. (also interpolated, with some exceptions, to $0^s{\cdot}001$ and $0''{\cdot}01$) to the co-ordinates as received from Dr. de Ball. These reductions were taken from the tables given in Vol. 134 of the *Ast. Nach.*, No. 3195—6, or approximately determined correspondingly as far as possible.

The proper motions given in the table with the star's designation were determined from the reduced positions in an approximate way, by comparing the older results either individually or in means of groups with preliminary results (differing quite slightly only from the definitive means N_3) of the new observations which are inserted in the table, and taking means from the separate determinations of the annual motion, with approximate regard to such weights as resulted from estimated weights of the old results. Weight $\frac{1}{4}$ was given to one zone observation of Lalande or Bessel, to Zach and to Right Ascensions of Mayer and places of Rümker depending upon a single observation, weight $\frac{1}{2}$ to other modern catalogue places of the latter kind, weights ranging from 1 to 3 in the other cases; when possible, only the observations distant by more than 40 years from the new epoch were used. Assuming the values of the proper motion thus derived, the catalogue places give the differences from the new positions which are given under the heading "outstanding error." Of course, in a rigid least square solution an appropriate part of these errors would have been thrown upon the new normals themselves; but as the computed weight of the N_3 generally is between 16 and 25 for R.A., and 8 and 10 for Dec., the mean error of these amounts on the average only to $\pm 0^s{\cdot}007$ and $\pm 0''{\cdot}10$, and may be neglected compared with the errors of the other places and the remaining uncertainty of the proper motions.

Star's Designation and Assumed Proper Motion	Authority	R.A., 1888	Epoch	No. of Observations	Reduction to A.G.C.	Reduced R.A. for Epoch	Declination, 1888	Epoch	No. of Observations	Reduction to A.G.C.	Reduced Dec. for Epoch	Outstanding Error	
a′		h m s			s	s	° ′ ″			″		s	″
$-0^s{\cdot}031$	Zach 16	1 57 34·20	1793:		+·234	34·43	+17 42					+0·14	
$-0''{\cdot}018$	Lal. H.C.	33·82	93·5	1	+ 225	05	56·6	1793·8	1	−3·15	53·4	−0·23	−0·4
	P. I^h. 243	33·97	1800:	6	+ 225	19	56·0	1800:	6	−3·15	52·9	−0·08	−0·9
	B. Z. 332	34·11	26·0	1	+ 58	17	51·5	26·0	1	+0·9	52·4	−0·01	−0·9
	Kbg. 48	34·073	31·4	7	+ 95	17	53·61	32·5	6	−0·4c	53·2	+0·01	0·0

Digitized by Google

Star's Designation and Assumed Proper Motion	Authority	R.A., 1888	Epoch	No. of Observations	Reduction to A.G.C.	Reduced R.A. for Epoch	Declination, 1888	Epoch	No. of Observations	Reduction to A.G.C.	Reduced Dec. for Epoch	Outstanding Error	
		h m s			s	s	° ′ ″			″	″	s	″
(a′—*cont.*)	Wrott. 127	1 57 34·038	1833	10	+·058	34·10	+17 42					—0·06	
	Taylor 673	34·363	33	5	— 22	34	55·30	1833	6	—1·51	53·8	+0·18	+0·6
	Rob. 454	34·016	34·5	2	+ 81	10	54·86	53·3	2	—1·13	53·7	—0·06	+0·9
	Cape I. 178	34·116	39·9	1	+ 15	13						—0·01	
	Par. 2574 I	33·995	46·8	1	+ 43	04						—0·08	
	Gr. 7 y. 136	34·112	56·4	7	+ 40	15	52·79	56·2	4	—0·05	52·7	+0·06	—0·1
	Cape III. 71.....	34·002	57·7	2	+ 69	07	52·78	57·7	2	—0·41	52·4	—0·02	—0·4
	Par. 2574 II	34·042	57·8	4	+ 43	08	54·07	57·8	2	—0·38	53·7	0·00	+0·9
	Gr. II. 7 y. 270..	34·032	61·8	7	+ 51	08	52·73	61·8	7	—0·06	52·7	+0·01	0·0
	Quet. 789	34·003	65·2	5	+ 68	07	52·69	64·8	3	—0·17	52·5	+0·01	—0·1
	Berl. A.G. A. ...	34·008	70·4	2	0	01	52·00	70·4	2	0·00	52·0	—0·04	—0·5
	Gr. 9 y. 192	34·093	74·8	8	+ 27	12	53·30	74·8	7	—0·74	52·6	+0·09	+0·1
	Par. 2574 III ...	34·003	78·2	3	+ 34	04	53·14	78·2	3	—0·23	52·9	+0·02	+0·5
	New Obs.	33·993	88·8			33·99	52·17	88·8			52·2	0·00	0·0
a													
—0ˢ·007	Lal. H.C.	2 0 4·19	1793·8	1	+·232	4·42	+20 3 32·1	1793·8	1	—3·1	29·0	—0·16	+1·8
—0″·02	B. Z. 200, 391 ...	4·48	1825·9	2	+ 58	54	27·1	1825·9	2	+0·5	27·6	+0·20	+1·0
	Berl. A.G. A. ...	3·981	70·5	2	0	3·98	24·74	70·5	2	0·00	24·7	—0·05	—1·0
	Berl. A.N. 81 ...	3·960	71	2	0	96	24·35	71	2	0·0	24·3	—0·07	—1·3
	Par. 2617 III ...	3·961	72·4	2	+ 36	4·00	26·14	72·4	2	—0·23	25·9	—0·02	+0·3
	New Obs.	3·899	88·9			3·90	25·32	88·9			25·3	0·00	0·0
b													
—0ˢ·0023	T. Mayer 79 ...	2 1 37·758	1756·7	2	·000	37·76	+17 29 43·66	1756·7	2	0·00	43·7	+0·43	+1·1
+0″·009	Zach 21	36·94	93:		+ 233	17						—0·07	
	Lal. H.C.	37·09	93·8	1	+ 224	31	47·2	93·8	1	—3·2	44·0	+0·07	+1·1
	P. I^{h}. 257	36·98	1800:	4	+ 224	20	45·1	1800:	7	—3·2	41·9	—0·02	—1·1
	B. Z. 332. 394 ...	37·21	27·0	2	+ 58	27	42·7	27·0	2	+1·0	43·7	+0·11	+0·5
	Taylor 687	37·141	35	3	— 21	12	43·99	35	4	—1·50	42·5	—0·02	—0·8
	Rü. 536	37·001	40:	2	0	00	44·99	40:	2	—0·21	44·8	—0·13	+1·5
	Gr. 12 y. 188 ...	36·975	43	6	+ 57	03	44·03	42	5	—0·28	43·7	—0·09	+0·4
	Kbg. (L.)	36·954	61·8	1	— 40	36·91	44·43	61·8	1	—0·4	44·0	—0·17	+0·4
	Glasg. 465	37·097	66·7	4	+ 14	37·11	42·09	66·3	2	—0·17	41·9	+0·04	—1·7
	Berl. A.G. A. ...	37·136	70·4	2	0	14	43·64	70·4	2	0·00	43·6	+0·08	0·0
	New Obs.	37·018	88·8			02	43·80	88·8			43·8	0·00	0·0
c													
+0ˢ·007	Lal. H.C.	2 3 13·12	1794·7	2	+·223	13·34	+16 42 16·2	1794·7	2	—3·2	13·0	+0·12	+0·6
—0″·19	B. Z. 394	13·28	1828·0	1	+ 58	34	4·3	1828·0	1	+0·6	4·9	—0·11	—1·2
	Rü. N.F. 1083 .	13·519	51	1	+ 45	56	2·67	51	1	—0·52	2·1	—0·05	+0·5
	Berl. A.G. A. ...	13·733	70·4	2	0	73	41 57·97	70·4	2	0·00	58·0	—0·02	0·0
	Berl. A.N. 88 ...	13·778	76·0	1	0	78	58·16	76·0	1	0·0	58·2	—0·01	+1·2
	New Obs.	13·884	88·9			88	54·53	88·9			54·5	0·00	·00

Digitized by Google

Star's Designation and Assumed Proper Motion	Authority	R.A., 1888	Epoch	No. of Observations	Reduction to A.G.C.	Reduced R.A. for Epoch	Declination, 1888	Epoch	No. of Observations	Reduction to A.G.C.	Reduced Dec. for Epoch	Outstanding Error	
d		h m s			s	s	° ′ ″			″	″	s	″
0s·000	Lal. H.C.	2 3 29·91	1793·8	1	+·232	30·14	+19 49 3·0	1793·8	1	−3·1	59·9	+0·27	−1·6
0″·00	B. Z. 200	29·73	1823·8	1	— 10	29·72	48 58·8	1823·8	1	0·0	58·8	−0·15	−2·7
	Str. P.M. 198	30·015	24·1	5	+ 29	30·04	49 2·73	24·1	5	−1·17	1·6	+0·17	+0·1
	Par. 2668 II	29·812	58·9	2	+ 45	29·86	1·34	60·9	1	−0·35	1·0	−0·01	−0·5
	Berl. A.G. A.	29·910	70·5	2	0	91	1·26	70·5	2	0·00	1·3	+0·04	−0·2
	Pola A.N. 92	29·79	77·8	1			1·96	77·8	1				
	Par. 2668 III	29·890	81·2	3	+ 36	93	1·86	81·9	2	−0·23	1·6	+0·06	+0·1
	New Obs.	29·873	88·9			87	1·48	88·9			1·5	0·00	0·0
e													
+0s·0047	Brad. 296	2 4 24·426	1754·5	8	·000	24·43	+18 58 21·17	1755·3	3	0·00	21·2	−0·02	+0·9
−0″·021	T. Mayer 80	24·573	56·7	1	0	57	20·43	56·7	1	0·00	20·4	+0·11	+0·1
	Zach 25	24·62	93:		+ 230	85						+0·21	
	Lal. H.C.	24·53	94·7	2	+ 228	76	21·6	94·7	2	−3·1	18·5	+0·12	−1·0
	P. I^{h}. 267	24·25	1800:	10	+ 228	48	21·8	1800:	10	−3·1	18·7	−0·18	−0·7
	B. Z. 332	24·69	26·0	1	+ 58	75	17·0	26·0	1	+1·0	18·0	−0·03	−0·8
	Wrott. 132	24·758	33	10	+ 58	82						+0·01	
	Taylor 702	24·736	33	6	— 19	72	20·49	33	5	−1·45	19·0	−0·10	+0·3
	Rob. 473	24·844	45·4	5	+ 100	94	19·81	51·2	3	−0·98	18·8	+0·06	+0·5
	Wrott. II. 103	24·821	50·0	7	+ 73	89						0·00	
	Par. 2687 I	24·852	50·3	4	+ 43	89·						0·00	
	Pulk. 303	24·842	51·3	6	+ 56	90	18·51	51·3	6	−0·05	18·5	0·00	+0·2
	Par. 2687 II	24·937	56·9	1	+ 44	98	19·27	58·8	2	−0·36	18·9	+0·05	+0·8
	Gr. 7 y. 139	24·957	60·6	3	+ 37	99	17·79	60·6	3	−0·05	17·7	+0·04	−0·4
	Gr. II. 7 y. 284	24·987	61·0	2	+ 3	99	18·00	61·0	2	−0·04	18·0	+0·04	−0·1
	Yarn. 1006	24·947	66·2	2	+ 36	98	18·67	68·0	2	−0·47	18·2	0·00	+0·3
	Quet. 826	24·952	70·0	3	+ 68	25·02	18·46	65·4	2	−0·12	18·3	+0·03	+0·3
	Berl. A.G. A.	25·024	70·5	2	0	02	17·92	70·5	2	0·00	17·9	+0·03	0·0
	Gr. 9 y. 198	25·024	73·7	6	+ 26	05	17·91	73·3	9	−0·70	17·2	+0·04	−0·6
	Par. 2687 III	24·973	79·5	3	+ 35	01	19·43	79·5	3	−0·23	19·2	−0·03	+1·5
	New Obs.	25·076	88·9			08	17·54	88·9			17·5	0·00	0·0
r													
+0s·0179	T. Mayer 81	2 5 3·970	1756·7	1	·000	3·97	+20 50 52·09	1756·7	1	0·00	52·1	+0·30	−4·6
+0″·001	Zach 27	4·08	93:		+ 230	4·31						−0·01	
	Lal. H.C.	4·16	93·8	1	+ 231	39	57·9	93·8	1	−3·1	54·8	+0·06	−1·9
	P. II^{h}. 1	4·05	1800·8	7	+ 231	28	51 0·9	1800:	7	−3·1	57·8	−0·17	+1·1
	B. Z. 200	4·89	23·8	1	— 10	88	50 57·6	23·8	1	0·0	57·6	+0·01	+1·0
	Taylor 706	5·055	37	2	— 17	5·04	57·58	37	4	−1·39	56·2	−0·06	−0·5
	Rü. 545	5·203	40:	2	+ 4	21	51 1·63	40:	2	−0·21	61·4	+0·07	+4·7
	Rdcl. II. 265	5·515	57·2	3	+ 23	54	50 56·03	58·9	1	−1·06	55·0	+0·08	−1·8
	Par. 2701 II	5·455	58·8	1	+ 46	50	58·03	58·9	2	−0·34	57·7	+0·01	+0·9
	Quet. 832	5·656	69·1	5	+ 68	72	58·69	63·9	2	−0·12	58·6	+0·04	+1·8

Digitized by Google

Star's Designation and Assumed Proper Motion	Authority	R.A., 1888	Epoch	No. of Observations	Reduction to A.G.C.	Reduced R.A. for Epoch	Declination, 1888	Epoch	No. of Observations	Reduction to A.G.C.	Reduced Dec. for Epoch	Outstanding Error	
		h m s			s	s	° ′ ″			″	″	s	″
(f—*cont.*)	Par. 2701 III ...	2 5 5·843	1871·9	1	+·037	5·88	+20 50 59·43	1871·9	1	−0·23	59·2	+0·15	+2·4
	Glasg. 479	5·842	74·2	6	+ 3	84·	57·03	78·5	7	−0·09	56·9	+0·08	+0·1
	Berl. A.G. B. ...	5·908	78·7	4	0	91	56·81	78·7	4	0·00	56·8	+0·06	0·0
	New Obs.	6·034	88·8			6·03	56·79	88·8			56·8	0·00	0·0
g													
−0ˢ·012	B. Z. 27, 391	2 6 3·82	1824·9	2	−·012	3·81	+21 27 28·8	1824·9	2	+0·5	29·3	+0·17	−0·7
−0″·06	Gen. A.N. 20 ...	3·280	41·7	4	+ 60	34	29·63	42·0	4	+0·1	29·7	−0·01	+0·6
	Berl. A.G. B. ...	3·007	81·4	4	0	01	26·97	81·4	4	0·00	27·0	+0·06	+0·4
	New Obs.	2·866	88·8			2·87	26·17	88·8			26·2	0·00	0·0
h													
+0ˢ·0102	Brad. 303	2 6 30·555	1755·0	7	·000	30·55·	+20 41 1·70	1754·2	4	0·00	1·7	+0·07	+0·5
+0″·017	T. Mayer 82 ...	30·188	56·7	2	0	19	0·84	56·7	2	0·00	0·8	−0·31	−0·4
	Zach 29	30·84	93:		+ 226	31·07						+0·19	
	Lal. H.C.	30·52	93·8	1	+ 234	30·75	2·6	93·8	1	−3·0	59·6	−0·13	−2·3
	P. II^{h}. 11	30·63	1800:	8	+ 234	86	5·1	1800:	9	−3·0	2·1	−0·08	+0·1
	B. Z. 200, 391 ...	31·28	25·9	2	+ 58	31·34	2·9	25·9	2	+0·4	3·3	+0·13	+0·9
	Rob. 482	31·200	31·5	2	+ 100	30	4·54	53·4	2	−0·89	3·6·	+0·03	+0·7
	Taylor 718	31·262	32	5	− 16	25	2·09	33	5	−1·39	0·7	−0·02	−1·9
	Wrott. 135	31·174	33	10	+ 58	23						−0·04	
	Gr. 12 y. 193	31·280	40	5	+ 112	39	3·34	39	9	−0·74	2·6	+0·04	−0·1
	Rü. 552	31·351	40:	7	+ 4	35·	2·80	40:	7	−0·21	2·6	0·00	−0·1
	Pulk. 313	31·370	42·4	4	+ 57	43	3·66	42·4	4	−0·05	3·6	+0·06	+0·9
	Rü. N.F. 1105 ...	31·284	45	8	+ 66	35	4·22	45	8	−0·58	3·6	−0·05	−0·1
	Wrott. II. 105 ...	31·407	50·0	6	+ 69	48						+0·02	
	Par. 2732 I	31·448	51·5	3	+ 44	49	3·89	52·9	1	−0·42	3·5	+0·02	+0·6
	Yarn. 1025	31·549	56·2	3	+ 38	59	4·68	68·2	3	−0·47	4·2	+0·07	+1·0
	Rdcl. II. 272 ...	31·479	58·8	4	+ 23	50	3·28	57·5	2	−1·06	2·2	−0·04	−0·7
	Cape III. 76	31·569	59·7	4	+ 74	64	4·39	59.6	3	−0·41	4·0	+0·09	+1·0
	Gr. 7 y. 141	31·519	59·7	6	+ 36	55·	3·33	59·7	6	−0·05	3·3	0·00	+0·3
	Kbg. (L.)	31·645	62·0	1	− 40	60·						+0·03	
	Gr. II. 7 y. 291...	31·578	64·0	1	+ 45	62	3·59	64·0	1	−0·03	3·6	+0·02	+0·5
	Quet. 840	31·567	66·4	5	+ 68	63·	4·14	61·4	2	−0·12	4·0	+0·01	+1·0
	Par. 2732 III ...	31·708	76·9	2	+ 37	74·	4·18	81·9	1	−0·23	3·9·	+0·04	+0·6
	Berl. A.G. B. ...	31·788	81·3	3	0	79	3·58	81·3	3	0·00	3·6	+0·02	+0·2
	New Obs.	31·847	88·9			85	3·46	88·9			3·5	0·00	0·0
i													
−0ˢ·0006	Brad. 309	2 7 38·783	1755·0	3	·000	38·78	+19 5					−0·17	
+0″·018	Zach 32	38·69	93:		+ 226	92						−0·01	
	Lal. H.C.	38·70	93·8	2	+ 229	93	23·5	1793·8	2	−3·1	20·4	0·00	+0·2
	P. II^{h}. 20	38·79	1800:	9	+ 229	39·02	23·1	1800:	9	−3·1	20·0	+0·10	−0·3
	B. Z. 332, 391 ...	38·89	27·0	2	+ 58	38·95	17·8	27·0	2	+1·0	18·8	+0·04	−2·0
	Taylor 728	38·822	35	2	− 18	80	22·03	35	4	−1·44	20·6	−0·10	−0·3

Digitized by Google

Star's Designation and Assumed Proper Motion	Authority	R.A., 1888	Epoch	No. of Observations	Reduction to A.G.C.	Reduced R.A. for Epoch	Declination, 1888	Epoch	No. of Observations	Reduction to A.G.C.	Reduced Dec. for Epoch	Outstanding Error	
		h m s			s	s	° ′ ″			″	″	s	″
(i—*cont.*)	Par. 2761 I	2 7 39·012	1849·5	3	+·044	39·06	+19 5 23·05	1846·8	1	−0·42	22·6	+0·17	+1·5
	Rob. 486	38·924	53·9	1	+ 100	02	22·77	46·5	5	−0·94	21·8	+0·13	+0·7
	Par. 2761 II ...	38·829	58·4	2	+ 44	38·87	22·45	57·5	2	−0·36	22·1	−0·02	+0·8
	Pulk. 317	38·880	59·3	4	+ 56	94	22·05	59·3	4	−0·05	22·0	+0·05	+0·6
	Gr. II. 7 y. 296...	38·869	65·9	3	+ 46	91·	21·66	65·9	3	−0·04	21·6	+0·03	+0·1
	Berl. A.G. A. ...	38·887	70·5	2	0	89	21·46	70·5	2	0·00	21·5	+0·01	−0·1
	Par. 2761 III ...	39·117	79·0	1	+ 35	39·15						+0·27	
	New Obs.	38·872	88·9			38·87	21·90	88·9			21·9	0·00	0·0
k													
−0ˢ·002	Lal. H.C.	2 8 39·48	1793·8	1	+·237	39·72	+22 6 33·8	1793·8	1	−3·0	30·8	−0·06	+0·9
−0″·05	Rü. 564	39·747	1840:	3	+ 7	75	27·39	1840:	2	−0·23	27·2	+0·06	−0·4
	Par. 2779 II ...	39·629	58·9	2	+ 47	68	26·16	59·4	2	−0·33	25·8	+0·03	−0·8
	„ III ...	39·495	71·9	1	+ 38	43	26·80	71·9	1	−0·23	26·6	−0·09	+0·6
	Berl. A.G. B. ...	39·654	81·0	3	0	65	25·40	81·0	3	0·00	25·4	+0·05	−0·1
	New Obs.	39·593	88·8			59	25·15	88·8			25·1·	0·00	0·0
l													
−0ˢ·007	B. Z. 27	2 11 26·65	1821·8	1	−·006	26·64	+22 8 34·5	1821·8	1	−0·1	34·4	+0·08	0·0
−0″·01	Berl. A.G. B. ...	26·134	81·8	2	0	13	33·76	81·8	2	0·00	33·8	−0·01	0·0
	New Obs.	26·092	88·9			09	33·65	88·9			33·6·	0·00	0·0
m													
−0ˢ·0026	Brad. 320	2 11 54·013	1753·9	8	·000	54·01	+19 22 56·54	1755·6	6	0·00	56·5	−0·05	+0·1
+0″·006	T. Mayer 85.....	54·061	56·7	2	0	06	55·52	56·7	2	0·00	55·5	+0·01	−0·9
	Zach 37	53·84	93:		+ 220	06						+0·10	
	Lal. H.C.	53·85	95·7	1	+ 230	08	58·6	95·7	1	−3·1	55·5	+0·13	−1·1
	P. IIʰ. 49	53·67	1800:	9	+ 230	53·90	59·2	1800:	12	−3·1	56·1	−0·04	−0·6
	Rob. 502	53·657	30·7	5	+ 100	76	59·50	53·7	5	−0·96	58·5	−0·10	+1·5
	Pond 72	53·941	31:	10	− 27	91	59·46	30·3	12	−1·45	58·0	+0·05	+1·2
	Taylor 763	53·918	33	9	− 17	90	59·07	32	6	−1·43	57·6	+0·04	+0·7
	Kbg. 52	53·826	38·1	11	+ 86	91	56·28	38·1	11	−0·44	55·8	+0·07	−1·1
	Gr. 12 y. 204 I ..	53·732	40	6	+ 111	84	57·76	40	11	−0·73	57·0	0·00	+0·1
	Rü. 583.....	53·874	40:	8	+ 3	88	56·82	40:	8	−0·21	56·6	+0·05	−0·3
	Cape I. 195	53·832	40·2	3	+ 20	85						+0·01	
	Gen. A.N. 20 ...	53·742	41·7	10	+ 60	80	56·22	41·9	7	+0·1	56·3	−0·04	−0·6
	Pulk. 331	53·802	42·4	4	+ 57	86	56·49	42·4	4	−0·05	56·4	+0·02	−0·5
	Par. 2854 I	53·768	42·9	14	+ 44	81	56·98	42·3	5	−0·42	56·6	−0·02	−0·3
	Gr. 12 y. 204 II	53·738	44	7	+ 52	79	58·53	42	2	−0·35	58·2	−0·04	+1·3
	Rü. N.F. 1158 ...	53·710	45	12	+ 56	77	57·02	45	11	−0·56	56·5	−0·06	−0·4
	Rdcl. 680	53·868	46·1	7	+ 40	91	56·78	56·9	1	−1·18	55·6	+0·09	−1·4
	Rdcl. II. 282	53·937	55·9	2	+ 24	96	56·71	58·6	3	−1·00	55·7	+0·16	−1·3
	Par. 2854 II ...	53·747	58·4	7	+ 44	79	58·01	59·5	5	−0·36	57·6·	0·00	+0·6
	Gr. 7 y. 148	53·777	59·8	7	+ 35	81	57·90	59·8	7	−0·05	57·8·	+0·02	+0·8

Digitized by Google

Star's Designation and Assumed Proper Motion	Authority	R.A., 1888	Epoch	No. of Observations	Reduction to A.G.C.	Reduced R.A. for Epoch	Declination, 1888	Epoch	No. of Observations	Reduction to A.G.C.	Reduced Dec. for Epoch	Outstanding Error	
		h m s			s	s	° ′ ″			″	″	s	″
(m—*cont.*)	Cape III. 80 ...	2 11 53·817	1860·9	3	+·071	53·89	+19 22 57·37	1860·9	3	—0·42	56·9	+0·11	—0·1
	Yarn. 1060	53·767	61·3	7	+ 37	80	57·21	71·0	3	—0·47	56·7	+0·02	—0·4
	Gr. II. 7 y. 308 ..	53·731	62·9	2	+ 45	78	56·52	62·9	2	—0·04	56·5	0·00	—0·5
	Pulk. M.C.	53·784	71:		0	78	57·42	71:		0·00	57·4	+0·03	+0·3
	Rogers 96	53·804	72·0	2	— 1	80						+0·05	
	Gr. 9 y. 210	53·768	74·6	6	+ 25	79	57·71	74·7	10	—0·68	57·0	+0·04	—0·1
	Arm. II. 296 ...	53·695	76·9	3	+ 36	73	56·03	76·7	3	—0·86	55·2	—0·01	—2·1
	Par. 2854 III ...	53·625	80·9	1	+ 35	66						—0·07	
	New Obs.	53·713	88·9			71	57·16	88·9			57·2	0·00	0·0
n													
—0s·002	B. Z. 27, 391	2 12 16·68	1824·9	2	—·008	16·67	+21 22 51·3	1824·9	2	+0·4	51·7	—0·30	+0·2
—0″·04	Rü. 585	17·446	40:	2	+ 7	17·45	51·21	40:	2	—0·22	51·0	+0·51	+0·1
	Berl. A.G. B. ...	16·889	80·6	4	0	16·89	49·39	80·6	4	0·00	49·4	+0·03	+0·2
	New Obs.	16·843	88·9			84	48·86	88·9			48·9	0·00	0·0
o													
—0s·004	Lal. H.C.	2 12 38·68	1793·8	1	+·239	38·92	+22 38 58·4	1793·8	1	—2·9	55·5	+0·07	[−5·8]
+0″·01	Rü. N.F. 1165 ...	38·544	1846	1	+ 90	63	39 2·88	1846	1	—0·60	2·3	—0·01	+0·4
	Par. 2868 II ...	38·554	60·1	4	+ 48	60	2·13	60·8	2	—0·32	1·8	+0·01	—0·2
	Arm. II. 297 ...	38·442	67·3	2	+ 41	48	2·86	68·9	3	—0·77	2·1	—0·08	0·0
	Rogers 97	38·543	78·5	6	+ 1	54	2·17	78·5	6	+0·19	2·4	—0·01	+0·2
	Ann Arb. 18 ...	38·418	79·9	2			2·14	79·9	3				
	Berl. A.G. B. ...	38·542	81·8	2	0	54	2·51	81·8	2	0·00	2·5	+0·04	+0·3
	New Obs.	38·471	88·9			47	2·30	88·9			2·3	0·00	0·0
p													
—0s·003	Rü. N.F. 1180 ...	2 14 17·654	1844	1	+·058	17·71	+19 36 36·1	1844	1	—0·56	35·5	—0·37	+0·2
—0″·01	Berl. A.G. A. ...	18·116	70·5	2	0	18·12	34·98	70·5	2	0·00	35·0	+0·11	0·0
	New Obs.	17·948	88·9			17·95	34·85	88·9			34·8	0·00	0·0
q													
—0s·002	Rü. N.F. 1186 ...	2 14 53·806	1844	1	+·091	53·90	+22 54 48·02	1844	1	—0·61	47·4	—0·07	0·0
0″·00	Berl. A.G. B. ...	53·959	81·8	2	0	96	47·46	81·8	2	0·00	47·5	+0·07	+0·1
	New Obs.	53·881	88·8			88	47·41	88·8			47·4	0·00	0·0
r													
0s·000	B. Z. 391	2 17 29·82	1827·9	1	+·058	29·88	+20 54 20·5	1827·9	1	+0·5	21·0	—0·09	—0·2
—0″·08	Berl. A.G. B. ...	30·045	81·0	2	0	30·04	17·45	81·0	2	0·00	17·4	+0·08	+0·5
	New Obs.	29·968	88·9			29·97	16·34	88·9			16·3	0·00	0·0
r′													
+0s·003	Lal. H.C.	2 19 26·78	1793·6	1	+·245	27·02	+24 39 11·0	1793·6	1	—2·8	8·2	—0·07	—0·6
+0″·02	B. Z. 530	27·04	1832·9	1	+ 58	10	8·1	1832·9	1	—0·2	7·9	—0·12	—1·7
	Par. 3003 II ...	27·396	58·4	2	+ 50	45	12·66	59·0	1	—0·30	12·4	+0·15	+2·3
	„ III ...	27·373	75·2	3	+ 41	41	11·85	75·4	2	—0·22	11·6	+0·06	+1·2
	Berl. A.G. B. ...	27·448	81·0	2	0	45	10·55	81·0	2	0·00	10·5	+0·08	0·0
	New Obs.	27·387	88·8			39	10·69	88·9			10·7	0·00	0·0

Digitized by Google

Star's Designation and Assumed Proper Motion	Authority	R.A., 1888	Epoch	No. of Observations	Reduciton to A.G.C.	Reduced R.A. for Epoch	Declination, 1888	Epoch	No. of Observations	Reduction to A.G.C.	Reduced Dec. for Epoch	Outstanding Error	
s		h m s			s	s	° ′ ″			″	″	s	″
+0s·002	B. Z. 27	2 20 38·745	1821·8	1	—·004	38·74	+22 22 24·86	1821·8	1	—0·13	24·7	+0·98	—0·8
+0″·02	Rü. N.F. 1246 ..	37·778	44	1	+ 85	37·86	24·9	44	1	—0·60	24·4	+0·06	—1·5
	Yarn. 1116	37·905	62·2	4	+ 41	95	27·51	58·7	5	—0·45	27·1	+0·11	+0·9
	Berl. A.G. B..	37·965	81·0	2	0	96·	27·3	81·0	2	0·00	27·3	+0·09	+0·7
	New Obs.	37·886	88·8			89	26·7	88·9			26·8	0·00	0·0
	B. Z. 27 seems to require the correction —1s which has been applied in determining the P.M.												
t													
—0s·002	Lal. H.C.	2 21 53·25	1793·6	1	+·243	53·49	+24 7 46·9	1793·6	1	—2·85	44·0·	—0·03	0·0
0″·00	Berl. A.G. B.....	53·417	1881·8	2	0	42	44·65	1881·8	2	0·00	44·6·	+0·08	+0·7
	New Obs.	53·333	88·9			33	43·98	88·9			44·0	0·00	0·0
u													
+0s·003	Lal. H.C.	2 22 49·92	1793·6	1	+·240	50·16	+22 58 8·7	1793·6	1	—2·9	5·8	—0·08	—2·1
—0″·02	Rü. 631	50·508	1840:	3	+ 13	52	6·69	1840:	3	—0·24	6·4·	+0·14	—0·5
	Pulk. 358	50·315	42·4	4	+ 54	37	7·34	42·4	4	—0·04	7·3	—0·02	+0·4
	Rü. N.F. 1267 ...	50·221	46	1	+ 93	31	9·92	46	1	—0·61	9·3	—0·09	+2·5
	Par. 3058 II	50·381	58·3	2	+ 48	43	7·27	58·8	1	—0·32	6·9·	—0·01	+0·3
	Arm. II. 319 ...	50·455	72·7	4	+ 40	49·	5·53	71·5	5	—0·72	4·8	+0·02	—1·5
	Rogers 102	50·562	78·0	6	+ 1	56	6·38	78·0	6	+0·19	6·6	+0·06	+0·4
	Ann Arb. 21	50·486	79·9	3			7·21	79·9	5				
	Berl. A.G. B.	50·535	81·4	4	0	53·	5·83	81·4	4	0·00	5·8	+0·03	—0·3
	New Obs.	50·529	88·8			53	5·98	88·8			6·0	0·00	0·0
v													
—0s·001	B. Z. 27	2 22 57·68	1821·8	1	—·003	57·68	+21 5 40·1	1821·8	1	—0·1	40·0	—0·04	+0·4
—0″·03	Berl. A.G. B.	57·662	80·0	2	0	66	37·19	80·0	2	0·00	37·2	0·00	—0·7
	New Obs.	57·652	88·9			65	37·59	88·9			37·6	0·00	0·0
w													
+0s·0042	Zach 48	2 24 4·87	1793:		+·190	5·06	+24 44					—0·33	
—0″·068	Lal. H.C.	5·34	93·6	1	+ 245	58	23·5	1793·6	1	—2·8	20·7	+0·19	—2·9
	P. IIh. 96	5·12	1800:	9	+ 245	36	25·3	1800:	9	—2·8	22·5	—0·05	—0·8
	Str. P.M. 242 ...	5·507	27·5	2	+ 39	55	23·89	27·5	2	—1·08	22·8	+0·02	+1·4
	Taylor 832	5·550	32	5	— 5	54·	25·46	32	5	—1·07	24·4	—0·02	+3·5
	B. Z. 530	5·67	32·9	1	+ 58	73	23·2	32·9	1	—0·3	22·9	+0·18	+1·9
	Wrott. 147	5·557	33	10	+ 58	61·						+0·06	
	Rob. 544	5·586	38·7	3	+ 100	69	20·72	54·0	1	—0·80	19·9	+0·11	+0·3
	Rü. 634	5·685	40:	3	+ 18	70	19·60	40:	3	—0·27	19·3	+0·12	—1·2
	,, N.F. 1277 ...	5·498	45	1	+ 113	61	22·45	45	1	—0·63	21·8	0·00	+1·6
	Par. 3077 I	5·587	45·2	4	+ 46	63	19·97	39·9	1	—0·45	19·5	+0·02	—1·0
	Pulk. 359	5·600	48·6	4	+ 58	66	20·92	48·6	4	—0·03	20·9	+0·04	+1·0
	Wrott. II. 116 ...	5·545	50·8	5	+ 75	62						—0·01	
	Par. 3077 II	5·598	58·9	2	+ 50	65	20·38	58·8	4	—0·30	20·1	—0·01	+0·9
	Yarn. 1139	5·694	65·9	3	+ 45	74	20·58	69·5	2	—0·42	20·2	+0·05	+1·7

Digitized by Google

Star's Designation and Assumed Proper Motion	Authority	R.A., 1888	Epoch	No of Observations	Reduction to A.G.C.	Reduced R.A. for Epoch	Declination, 1888	Epoch	No. of Observations	Reduction to A.G.C.	Reduced Dec. for Epoch	Outstanding Error	
		h m s			s	s	° ′ ″			″	″	s	″
(w—*cont.*)	Quet. 969	2 24 5·721	1871·2	4	+·029	5·75	+24 44 19·44	1871·5	2	+0·13	19·6	+0·04	+1·2
	Berl. A.G. B.	5·829	81·0	2	0	83	17·84	81·0	2	0·00	17·8	+0·07	+0·1
	New Obs.	5·793	88·9			79	17·16	88·9			17·2	0·00	0·0
w′													
—0s·002	Lal. H.C.	2 26 1·53	1793·8	1	+·237	1·77	+21 50 13·3	1793·8	1	—3·0	10·3	—0·08	[−6·3]
0″·00	B. Z. 27	1·86	1821·8	1	— 2	86	17·2	1821·8	1	—0·13	17·1	+0·07	+0·5
	Yarn. 1159	1·638	66·9	2	+ 41	68	17·18	65·9	2	—0·45	16·7	—0·02	+0·1
	Berl. A.G. B.	1·719	81·0	2	0	72	16·54	81·0	2	0·00	16·5	+0·04	—0·1
	Par. 3127 III ...	1·780	81·4	2	+ 38	82	16·14	81·4	2	—0·23	15·9	+0·15	—0·7
	New Obs.	1·664	88·8			66	16·60	88·8			16·6	0·00	0·0
x													
+0s·006	Lal. H.C.	2 28 10·99	1793·6	1	+·244	11·23	+24 24 4·1	1793·6	1	—2·8	1·3	—0·01	+0·5
+0″·03	B. Z. 530	11·32	1832·9	1	+ 58	38	0·2	1832·9	1	—0·3	59·9	—0·09	—2·1
	Par. 3164 II	11·607	58·9	2	+ 49	66						+0·03	
	„ III ...	11·924	71·9	1	+ 40	96						+0·25	
	Berl. A.G. B.	11·820	81·0	2	0	82	4·37	81·0	2	0·00	4·4	+0·06	+0·9
	New Obs.	11·812	88·9			81	3·67	88·9			3·7	0·00	0·0
y													
—0s·006	B. Z. 27	2 28 17·04	1821·8	1	—·002	17·04	+22 28 35·0	1821·8	1	—0·1	34·9	+0·03	—0·6
—0″·02	Berl. A.G. B.	16·675	81·0	2	0	16·67	34·72	81·0	2	0·00	34·7	+0·02	+0·3
	New Obs.	16·612	88·9			61	34·22	88·9			34·2	0·00	0·0
z													
0s·000*	Lal. H.C.	2 30 18·08	1793·8	1	+·239	18·32	+22 33 49·5	1793·8	1	—2·9	46·6	—0·34	—1·3
+0″·01	*B. Z. 27	19·15	1821·8	1	— 1	19·15	49·4	1821·8	1	—0·1	49·3	+0·49	+1·1
	Par. 3213 II	18·615	58·9	2	+ 47	18·66	49·11	58·9	1	—0·33	48·8	0·00	+0·2
	Berl. A.G. B.	18·749	81·6	3	0	75	49·36	81·6	3	0·00	49·4	+0·09	+0·6
	New Obs.	18·656	88·9			66	48·88	88·9			48·9	0·00	0·0

* Assuming the correction +1s for Lalande's R.A., the proper motion would be —0s·006, with the outstanding errors: Lal. corr. +0s·09, B.Z. +0s·21, Par.—0s·18, Berl. +0s·05.

a													
+0s·0077	Brad. 361	2 30 31·844	1755·0	3	·000	31·84	+24 9 33·88	1754·3	3	0·00	33·9	—0·06	+2·2
+0″·001	Zach 55	32·04	93:		+ 180	32·22						+0·03	
	Lal. H.C.	31·50	93·6	1	+ 244	31·74	36·3	93·6	1	—2·85	33·4	—0·46	+1·4
	P. IIh. 128	31·99	1802·1	10	+ 244	32·23	34·5	1802·4	8	—2·85	31·6	—0·03	—0·4
	Str. P.M. 253 ...	32·352	24·9	2	+ 38	39	34·11	24·9	2	—1·09	33·0	—0·05	+0·6
	B. Z. 530	32·35	32·9	1	+ 58	41	33·1	32·9	1	—0·2	32·9	—0·09	+0·5
	Wrott. 158	32·355	33	4	+ 58	41						—0·08	
	Taylor 867	32·594	36	7	— 4	59	35·05	37	3	—1·10	33·9	+0·10	+1·6
	Rob. 564	32·583	38·0	2	+ 100	68						+0·14	
	Gr. 12 y. 224 I ..						33·61	38	10	—0·76	32·8		+0·3

Digitized by Google

Star's Designation and Assumed Proper Motion	Authority	R.A., 1888	Epoch	No. of Observations	Reduction to A.G.C.	Reduced R.A. for Epoch	Declination, 1888	Epoch	No. of Observations	Reduction to A.G.C.	Reduced Dec. for Epoch	Outstanding Error	
		h m s			s	s	° ′ ″			″	″	s	″
(*α—cont.*)	Rü. 667	2 30 32·622	1840:	4	+·017	32·64	+24 9 32·49	1840:	2	—0·26	32·2	+0·09	—0·3
	Rü. N.F. 1341 ...	32·326	45	1	+ 107	43	32·61	45	1	—0·63	32·0	—0·06	—0·6
	Gr. 12 y. 224 II	32·396	46	2	+ 52	45						—0·15	
	Pulk. 375	32·562	46·9	4	+ 58	62	32·99	46·9	4	—0·03	33·0	+0·01	+0·4
	Par. 3217 I	32·661	51·3	5	+ 46	71	33·22	53·8	1	—0·44	32·8	+0·06	+0·2
	Rdcl. II. 315 ...	32·820	58·9	1	+ 21	84	33·07	61·5	2	—1·22	31·8	+0·14	—0·9
	Bonn VI	32·842	62·5	4	+ 32	87	34·52	62·5	4	—0·5	34·0	+0·14	+1·3
	Quet. 1017	32·824	66·6	3	+ 75	90	33·04	64·6	3	—0·12	32·9	+0·14	+0·1
	Arm. II. 338 ...						34·60	66·1	4	—0·64	34·0		+1·2
	Yarn. 1186	32·711	67·1	3	+ 45	76	32·97	61·0	3	—0·43	32·5	0·00	—0·2
	Par. 3217 III ...	32·995	77·0	2	+ 40	33·03	31·90	77·0	2	—0·22	31·7	+0·20	—1·2
	Becker 59	32·925	77·8	5	0	32·92	33·10	77·8	5	0·00	33·1	+0·08	+0·2
	Berl. A.G. B.	32·925	81·3	3	0	92	33·30	81·3	3	0·00	33·3	+0·05	+0·4
	New Obs.	32·933	88·9			93	32·96	88·9			33·0	0·00	0·0
β													
0ˢ·000	Lal. H.C.	2 31 24·94	1793·8	1	+·239	25·18	+22 38 37·1	1793·8	1	—2·9	34·2	—0·12	—2·1
—0″·03	B. Z. 27	25·43	1821·8	1	— 1	43	34·5	1821·8	1	—0·1	34·4	+0·13	—1·0
	Par. 3237 II	25·183	58·9	1	+ 47	23	35·76	58·9	1	—0·33	35·4	—0·07	+1·1
	„ III ...	25·174	71·9	1	+ 39	21	37·30	71·9	1	—0·22	37·1	—0·09	+3·2
	Berl. A.G. B.	25·374	82·3	4	0	37	33·89	82·3	4	0·00	33·9	+0·07	+0·3
	New Obs.	25·298	88·9			30	33·41	88·9			33·4	0·00	0·0

Summary of Results for Iris Stars.

It remains to give the following summary of the results, containing the positions N_3 for true mean epoch of observation and Equinox 1888·0, and all the data required for bringing them up to another epoch.

The weights attached to the R.A. and Dec. are those finally used in the preceding discussion of which the units correspond to computed mean errors of $\pm 0^s·0316$ and $\pm 0''·316$. The numbers attached as weights to the proper motions, in order only approximately to judge of their apparent reliableness, have a different meaning: these numbers are merely one hundredth of the coefficient of the annual motion resulting in the computation made on the principles explained before. Their unit, therefore, corresponds with an estimated mean error which would be approximately the $\frac{1}{2\,1\,0}$ of the mean error of one observation taken from the *Histoire Céleste* or Bessel's zones, or $\frac{1}{7}$ of the mean error of an average Greenwich position, &c.; the probable error of the adopted proper motion, therefore, may be approximately—for safety sake rather largely—estimated by dividing $0^s·01$ and $0''·1$ by the square root of the number given to represent its weight.

Digitized by Google

DEFINITIVE PLACES RESULTING FROM THE MERIDIAN

Star	Mag.	No. of Observations	No. of contr. Observatories	R.A., 1888	Epoch	Weight (Σp)	Proper Motion in R.A. and Weight		Precession in R.A., 1800	1850	1900.
				h m s			s		s	s	s
a′	7·0	33, 32	6	1 57 33·992	88·78	9·8	−0·0031	481	+3·2674	3·2757	3·2841
a	7·7	45, 44	8	2 0 3·900	88·85	20·9	−0·007	43	+3·3006	3·3097	3·3189
b	7·3	46	9	2 1 37·019	88·83	17·5	−0·0023	364	+3·2712	3·2794	3·2878
c	6·8	39, 40	9	2 3 13·885	88·85	17·5	+0·007	60	+3·2637	3·2717	3·2798
d	7·5	34, 36	9	2 3 29·873	88·92	15·2	0·000	122	+3·3038	3·3128	3·3219
e	6·0	37, 36	9	2 4 25·077	88·89	16·6	+0·0047	896	+3·2945	3·3032	3·3120
f	7·5	36, 35	9	2 5 6·034	88·85	15·5	+0·0179	293	+3·3203	3·3296	3·3391
g	8·5	25, 24	7	2 6 2·865	88·83	7·7	−0·012	44	+3·3302	3·3398	3·3495
h	5·5	53, 54	9	2 6 31·846	88·88	22·9	+0·0102	819	+3·3208	3·3301	3·3395
i	7·2	38	8	2 7 38·872	88·88	17·0	−0·0006	500	+3·3015	3·3103	3·3192
k	7·8	39	8	2 8 39·591	88·84	17·2	−0·002	45	+3·3443	3·3541	3·3640
l	8·3	39, 37	9	2 11 26·093	88·85	18·1	−0·007	12	+3·3503	3·3601	3·3700
m	6·0	52	8	2 11 53·712	88·88	20·9	−0·0026	1138	+3·3128	3·3216	3·3306
n	8·0	40, 39	9	2 12 16·848	88·89	17·0	−0·002	35	+3·3412	3·3508	3·3604
o	6·0	37, 38	9	2 12 38·471	88·88	16·5	−0·004	47	+3·3600	3·3700	3·3801
p	8·5	30	7	2 14 17·947	88·85	9·8	−0·003	12	+3·3200	3·3290	3·3381
q	7·8	42, 43	8	2 14 53·880	88·84	21·2	−0·002	6	+3·3684	3·3785	3·3887
r	8·5	52, 53	9	2 17 29·964	88·86	23·9	0·000	11	+3·3442	3·3536	3·3631
r′	7·3	22	5	2 19 27·386	88·84	7·4	+0·003	39	+3·4043	3·4150	3·4258
s	7·8	42	9	2 20 37·886	88·84	17·7	+0·002	24	+3·3719	3·3818	3·3918
t	8·6	35, 36	8	2 21 53·333	88·88	16·6	−0·002	24	+3·4014	3·4119	3·4225
u	6·0	41	9	2 22 50·529	88·85	17·1	+0·003	112	+3·3854	3·3955	3·4057
v	7·5	40	9	2 22 57·652	88·90	17·7	0·000	13	+3·3570	3·3665	3·3760
w	6·2	52, 53	9	2 24 5·793	88·90	22·5	+0·0042	541	+3·4158	3·4265	3·4374
w′	8·0	21	6	2 26 1·662	88·78	7·7	−0·002	39	+3·3741	3·3838	3·3936
x	8·2	49, 50	9	2 28 11·812	88·89	21·9	+0·006	42	+3·4192	3·4298	3·4405
y	8·1	43, 42	9	2 28 16·612	88·86	17·8	−0·006	12	+3·3884	3·3983	3·4083
z	7·6	40, 45	9	2 30 18·657	88·86	17·5	0·000*	34	+3·3937	3·4036	3·4137
α	7·0	36	8	2 30 32·934	88·86	16·1	+0·0077	719	+3·4202	3·4306	3·4412
β	8·3	44, 45	9	2 31 25·297	88·85	18·7	0·000	41	+3·3971	3·4071	3·4171

* Perhaps −0s·006 (see p. 464).

Digitized by Google

OBSERVATIONS OF THE IRIS COMPARISON STARS.

Dec., 1888	Epoch	Weight (Σp)	Proper Motion in Dec. and Weight	Precession in Dec., 1800	1850	1900	N_3 — Elkin		Star's Letter and Name
° ′ ″			″	″	″	″	s	″	
+ 17 42 52·14	88·80	6·0	−0·018 266	+17·681	17·563	17·443	− 0·008	− 0·48	a′
20 3 25·32	88·86	10·1	−0·02 43	+17·579	17·458	17·334	− 0·021	− 0·45	a
17 29 43·78	88·84	10·1	+0·009 439	+17·511	17·390	17·265	− 0·004	− 0·45	b
16 41 54·54	88·86	9·5	−0·19 60	+17·441	17·319	17·193	− 0·019	− 0·51	c
19 49 1·49	88·93	8·5	0·00 117	+17·432	17·308	17·181	− 0·018	− 0·46	d
18 58 17·54	88·88	8·7	−0·021 527	+17·392	17·267	17·139	− 0·008	− 0·37	e = 15 Arietis
20 50 56·82	88·85	9·3	+0·001 293	+17·363	17·237	17·108	− 0·012	− 0·48	f
21 29 26·14	88·85	4·8	−0·06 44	+17·322	17·195	17·064	− 0·024	− 0·29	g
20 41 3·47	88·87	11·3	+0·017 819	+17·301	17·173	17·042	− 0·009	− 0·43	h = η Arietis
19 5 21·89	88·89	8·8	+0·018 295	+17·249	17·121	16·991	− 0·010	− 0·52	i
22 6 25·16	88·85	8·9	−0·05 45	+17·207	17·076	16·943	− 0·014	− 0·44	k
22 8 33·59	88·86	9·1	−0·01 12	+17·081	16·948	16·812	− 0·031	− 0·44	l
19 22 57·15	88·87	9·6	+0·006 1172	+17·057	16·925	16·790	− 0·007	− 0·31	m
21 22 48·85	88·91	8·9	−0·04 35	+17·042	16·908	16·772	− 0·017	− 0·52	n
22 39 2·29	88·88	8·9	+0·01 17	+17·026	16·892	16·754	− 0·012	− 0·40	o = θ Arietis
19 36 34·86	88·89	6·0	−0·01 12	+16·946	16·812	16·674	− 0·018	− 0·56	p
22 54 47·41	88·85	10·4	0·00 6	+16·922	16·785	16·645	− 0·025	− 0·39	q
20 54 16·38	88·87	11·4	−0·08 11	+16·796	16·658	16·517	− 0·026	− 0·42	r
24 39 10·70	88·88	4·3	+0·02 35	+16·707	16·564	16·419	− 0·003	− 0·73	r′
22 22 26·78	88·86	9·4	+0·02 30	+16·647	16·505	16·360	− 0·019	− 0·47	s
24 7 43·98	88·89	8·8	0·00 24	+16·588	16·443	16·296	− 0·025	− 0·37	t
22 58 5·98	88·85	9·4	−0·02 112	+16·539	16·395	16·247	− 0·014	− 0·41	u
21 5 37·56	88·91	9·3	−0·03 13	+16·531	16·388	16·241	− 0·016	− 0·44	v
24 44 17·15	88·90	11·3	−0·068 404	+16·479	16·332	16·182	− 0·010	− 0·50	w
21 50 16·60	88·80	4·6	0·00 16	+16·379	16·232	16·082	− 0·029	− 0·53	w′
24 24 3·67	88·90	11·1	+0·03 32	+16·272	16·121	15·968	− 0·015	− 0·43	x
22 28 34·22	88·88	9·5	−0·02 12	+16·266	16·116	15·964	− 0·015	− 0·37	y
22 33 48·89	88·86	9·7	+0·01 29	+16·161	16·010	15·855	− 0·017	− 0·42	z
24 9 32·96	88·86	8·4	+0·001 568	+16·151	15·998	15·842	− 0·025	− 0·36	α = 30 Arietis
+ 22 38 33·40	88·88	9·9	−0·03 41	+16·104	15·951	15·796	− 0·015	− 0·36	β

Digitized by Google

Places very nearly agreeing with the definitive results N_3 were forwarded in 1890 to Dr. Elkin, to be used in his discussion of the *Iris* observations, but failed to reach him. Dr. Elkin, therefore, made use of the results of a discussion of his own of the meridian observations of the stars, which are given with his report on the determination of parallax from *Iris*. The differences $N_3 - \text{Elkin}$ are given with the table p. 467 ; as the difference between the two discussions mainly consists in different assumptions as to magnitude equation and to relative weight, and both of these elements were determined from more extended material in the present discussion, the tabulated values $N_3 - \text{Elkin}$ can be looked upon as corrections to the places used by Dr. Elkin. Allowing for the difference of zero-points to which they were referred, and which appears to be $+0^s{\cdot}016 \quad +0''{\cdot}44$, the residual differences give $0^s{\cdot}0058$ and $0''{\cdot}059$ as average values, and they are without any influence whatever upon the results derived from the heliometer measures.

Digitized by Google

DIVISION II.

OBSERVATIONS OF COMPARISON STARS FOR VICTORIA.

Individual Observations and Results of the Separate Series.

ALGIERS.

Apparent places, observed by MM. Rambaud and Sy with the Gautier Meridian Circle, were communicated by M. Trépied. The following mean places for 1889·0 were deduced from them by Dr. J. Lamp by aid of a ten-day ephemeris, which had been computed with the constants of the *Berliner Jahrbuch* at the Leipzig Observatory for all the *Victoria* comparison stars and distributed among the observers. This Ephemeris was used also in all other cases when apparent places were communicated.

Observations of Reference Stars.

1889	A		B		C		D	
	$19^h\ 6^m$	$-8°\ 7'$	$19^h\ 14^m$	$-5°\ 37'$	$20^h\ 14^m$	$-6°\ 42'$	$20^h\ 19^m$	$-3°\ 9'$
	s	″	s	″	s	″		″
June 3	39·25	27·5	...	...	...	...	...	...
4	·31	28·1	37·24	20·4	31·47	27·5	54·97	35·4
5	·39	27·2	·31	19·4	·49	26·9	55·02	34·1
8	·40	27·0	·24	20·0	...	...	·14	35·4
19	·40	...	·39	20·6	·50	28·3	·01	36·4
July 4	·48	26·6	·29	19·5	...	...	...	...
8	·42	26·5	·26	19·9	·48	27·3	...	...
19	·47	28·2	...	...	...	...	...	...
25	·41	28·1	·36	20·4	·56	27·2	·07	34·4
26	...	...	·33	20·0	·58	26·4	·13	34·8
29	·38	26·2	·33	19·9	...	...	...	...
Aug. 5	·39	28·0	·37	15·7	...	...	...	...
9	·48	26·6	·26	20·2	·50	28·1	·12	34·7
12	·42	26·3	·36	18·8	·52	26·5	·18	33·9
20	·45	25·3	·27	18·7	·53	27·2	·05	36·8
22	·39	26·5	·33	18·3	·43	27·3	·07	34·6

Digitized by Google

Observations of Comparison Stars.

1889	α	δ (south)	1889	α	δ (south)	1889	α	δ (south)	1889	α	δ (south)	1889	α	δ (south)
a	s	″	**g**	s	″	**p**	s	″	**u**	s	″	α	s	″
June 3	25·18	20·7	June 5	37·58	22·5	June 4	55·94	49·0	June 19	43·96	25·6	June 19	18·18	56·6
4	·14	20·4	8	·52	22·4	5	·96	48·5	Aug. 5	·87	25·3			
19	·33	20·9	July 4	·44	24·2	8	·88	48·5	20	·92	25·7			
July 25	·17	19·8	Aug. 22	·56	21·7	July 4	56·06	48·7						
26	·21	19·9				Aug. 22	55·89	46·4				β		
29	·20	17·9	**h**						**v**			July 25	37·91	15·1
			June 19	20·83	5·7				July 25	56·20	26·0			
b						**q**			26	·19	25·8			
June 5	2·50	59·6				June 3	23·65	22·4						
8	·40	59·8	**i**			4	·65	21·6						
July 8	·59	59·5	June 3	41·09	1·7	19	·78	22·4	**w**			γ		
19	·47	59·1	4	·06	2·2	July 8	24·00	21·0	June 3	27·21	32·1	June 3	57·29	52·4
Aug. 5	·56	60·2				Aug. 5	23·66	21·9	4	·15	31·3	4	·22	51·1
9	·48	59·3	**k**			9	·62	21·6	19	·30	32·4	19	·38	53·3
12	·58	58·1	July 4	53·34	44·3	12	·70	20·2	July 8	·52	32·9	July 26	·36	49·7
						20	·68	20·9	25	·09	30·9			
c			**l**						26	·18	30·7			
June 3	6·14	5·1												
4	6·23	5·2	June 5	22·10	17·5	**r**						δ		
			8	21·88	18·1	June 5	59·43	59·2	**x**			June 5	39·71	48·6
			Aug. 22	22·08	18·1	8	·43	59·9	June 5	22·37	58·5	Aug. 9	·75	48·3
d						July 4	·45	60·2	8	·30	57·1	12	·80	47·3
June 19	18·10	12·5	**m**			Aug. 22	·43	59·5	July 4	·38	60·3	20	·75	48·1
July 8	·26	10·9	June 19	54·06	39·8				Aug. 5	·50	59·0	22	·68	46·3
25	17·79?	12·2	July 8	·17	39·0				9	·41	59·7			
26	·99	11·1	19	53·94	39·9				12	·45	59·5			
Aug. 5	·95	12·6	25	·97	38·7	**s**			20	·35	58·9			
9	·87	11·4	26	·93	38·7	July 25	53·34	20·4	22	·33	57·6			
			Aug. 5	·93	40·0	Aug. 5	·33	20·7				ϵ		
			9	·95	39·4	9	·30	22·5				July 8	17·50	47·3
e						12	·34	20·7	**y**					
June 5	40·33	1·4	**n**			20	·36	21·3	June 3	25·85	53·4			
8	·22	1·5							4	·83	50·2			
July 4	·31	1·6	June 3	26·82	7·7				Aug. 9	·88	53·9	ζ		
			July 8	·97	6·8	**t**			12	·92	...			
			Aug. 5	·87	6·9				20	·93	53·0	July 25	4·73	15·5
			9	·81	5·2	June 3	4·47	17·6						
f			12	·89	5·5	4	·43	18·0						
June 3	50·45	48·6	20	·91	6·8	5	·46	17·5						
4	·46	49·1				8	·30	17·8	**z**					
July 25	·69	49·2				July 4	·42	20·0	June 5	3·49	55·8	η		
29	·49	47·3	**o**			8	·57	16·5	8	·33	58·7	Aug. 9	21·66	28·2
Aug. 20	·55	48·2	June 19	53·57	21·1	Aug. 22	·51	17·0	Aug. 22	·47	57·8	12	·81	25·8

Digitized by Google

1889	α	δ (south)	1889	α	δ (south)	1889	α	δ (south)	1889	α	δ (south)	1889	α	δ (south)
θ			ι'			κ			μ					
	s	"		s	"		s	"		s	"		s	"
June 3	23·76	58·1	Aug. 12	46·75	54·6	July 25	3·65	58·8	June 3	8·79	12·7	July 26	8·94	11·8
4	·75	56·2	20	·72	54·1	26	·71	58·6	4	·78	13·0	Aug. 9	·80	11·1
July 4	·77	57·3							19	·88	13·0	12	·89	11·7
									July 4	·83	12·2	20	·93	12·3
									25	·87	11·1	22	·87	11·4

The four reference stars, **A, B, C, D,** were selected closely preceding and following the zone nearly in the same Declination. These stars were to be observed every evening with the comparison stars in order to secure greater homogeneity in the results than could be expected from the use of the same system of fundamental stars taken from the almanacs at a greater and varying distance from the zone, or from the employment of different fundamental systems in the reductions. It was the intention, when the scheme of observation was prepared, to determine for each separate evening a constant correction to all the Right Ascensions and Declinations, depending upon assumed places of the four reference stars. This method would have been amply sufficient—and has been followed in the discussion of some of the series — when all the four reference stars were regularly observed, and the observations proved to be of considerable accuracy. It could not, however, render unnecessary a closer examination of the homogeneity of the different series afterwards to be made, at least for the Right Ascensions because of the magnitude equation, the mean brightness of the reference stars ($=5^{m}\cdot8$) being considerably higher than that of most of the *Victoria* comparison stars ; and in any case, when, as for Algiers, observations of one or more of the four stars were missing for a comparatively large proportion of the days of observation. It was, therefore, considered preferable to determine the day corrections in the same manner as for the observations of the *Iris* stars, viz., by using the reference as well as all the comparison stars observed together indiscriminately, and comparing the separate observations for a first approximation with simple means of the positions as they were communicated.

A slight error has been introduced in the first approximation in the case of Algiers, for the Right Ascensions, by the fact that in these means the Right Ascensions of July 8 were included, M. Trépied afterwards intimating that they should not be used, being quite unreliable because of some disturbance of the chronograph on that evening.

Digitized by Google

The numbers actually used as day corrections are given in the first columns of the following table, while opposite them are placed the values found in a later determination made for a preliminary reduction of the observations of the planet Victoria, in which the observed places for the stars were compared with normals nearly agreeing (except for a constant difference in Declination) with those finally assumed :—

Day Correction used for Stars				Later values			Day Correction used for Stars				Later values		
1889	$\Delta\alpha$	$\Delta\delta$	No. Stars	$\Delta\alpha$	$\Delta\delta$	No. Stars	1889	$\Delta\alpha$	$\Delta\delta$	No. Stars	$\Delta\alpha$	$\Delta\delta$	No. Stars
	s	″		s	″			s	″		s	″	
June 3	+ 0·04	+ 0·4	14	+ 0·031	+ 0·71	13	July 25	+ 0·01	0·0	13	+ 0·004	+ 0·33	15
4	+ 0·05	+ 0·1	16	+ 0·053	+ 0·24	16	26	− 0·01	− 0·5	11	− 0·031	− 0·38	11
5	− 0·01	− 0·2	13	+ 0·019	− 0·32	14	29	+ 0·01	− 0·9	4	− 0·072	− 0·75	4
8	+ 0·06	+ 0·1	11	...	...	...	Aug. 5	0·00	+ 0·4	10, 9	− 0·030	+ 0·52	10, 9
19	− 0·05	+ 0·9	12	− 0·070	+ 1·05	15	9	+ 0·03	+ 0·2	15	+ 0·015	+ 0·17	15
July 4	− 0·01	+ 0·6	10	+ 0·029	+ 0·83	11	12	− 0·04	− 0·6	14, 13	− 0·053	− 0·64	14, 13
8	− 0·12	− 0·1	11	−0·12::	+ 0·11	11	20	− 0·01	0·0	14	− 0·028	− 0·01	14
19	+ 0·01	+ 0·5	3	−0·003	+ 0·62	3	22	0·00	− 0·4	13	+ 0·033	− 0·71	13

The differences between the first approximation of day corrections and the later values are generally so small that no appreciable difference would result in the means by the introduction of the latter ; the means of the observations reduced by the day corrections found in the first approximation were therefore adopted, in this as well as in all the other series, as definitive results within the observer's system. One exceptionally large difference occurs, on July 29, but on this day only two of the comparison stars were observed, the means for which would be changed by $-0^{s}\cdot012$ and $-0^{s}\cdot014$ respectively by the introduction of the value of the $\Delta\alpha$ found afterwards, making due allowance for the general systematic correction of the Algiers places which is included in the "later values" besides the day correction proper ; and the effect of even these comparatively large corrections would become insensible in the general means.

The Declination of star **B** observed on August 5 was rejected in forming the $\Delta\delta$ given above, while it had been included in the first mean for the Declination of **B** used in the investigation of day corrections. The observation appears to be erroneous, but its preliminary use only affects the constant reduction afterwards to be derived for the Algiers declinations by a proportionate quantity, which amounts to no more than $0''\cdot01$.

The results of the Algiers observations, which, therefore, have been assumed as definitive and homogeneous within the observer's system, are contained in the following table, the last columns of which give the differences, second − first approximation expressed in $0^{s}\cdot001$ and $0''\cdot01$ respectively.

Digitized by Google

Second Approximation of Mean Values for Equinox 1889·0 and Corrections of First Approximation.

Star	R.A.	Dec.	No. of obs.	II — I	Star	R.A.	Dec.	No. of obs.	II — I
	h m s	° ′ ″				h m s	° ′ ″		
A	19 6 39·408	−8 7 26·99	14	+ 8 + 1	t	19 43 4·453	−4 46 17·70	6, 7	+ 3 +10
B	14 37·316	5 37 19·76	13	+ 6 −36	u	43 43·897	4 48 25·10	3	−23 +40
a	21 25·213	5 57 19·93	6	+ 8 − 3	v	44 56·195	4 58 26·15	2	0 −25
b	23 2·513	6 23 59·30	6, 7	+ 3 +10	w	47 27·194	4 51 31·58	5, 6	−46 +12
c	24 6·230	5 9 4·90	2	+45 +25	x	48 22·389	5 19 58·81	8	− 1 − 1
d	25 17·936	5 54 11·63	5, 6	−54 +17	y	51 25·884	4 58 52·45	5, 4	+ 4 +15
e	25 40·300	5 20 1·33	3	+10 +17	z	52 3·447	5 28 57·60	3	+17 −20
f	27 50·548	4 58 48·56	5	+18 − 6	α	52 18·120	6 38 55·65	1	...
g	28 37·535	4 41 22·68	4	+15 + 2	β	52 37·924	4 39 14·87	1	...
h	29 20·770	4 33 4·75	1	...	γ	54 57·320	4 36 51·40	4	+10 +20
i	30 41·120	5 1 1·70	2	+45 +25	δ	55 39·732	6 40 47·92	5	− 8 −22
k	30 53·379	4 32 43·57	1	...	ε	56 ...	5 17 47·29	1	...
l	31 22·037	3 43 18·07	3	+17 −17	ζ	57 4·744	8 0 15·27	1	...
m	31 53·962	4 53 39·13	6, 7	−28 +27	η	57 21·730	4 56 27·20	2	− 5 −20
n	34 26·850	5 42 6·57	5, 6	−30 − 7	θ	59 23·787	6 53 56·83	3	+27 +37
o	34 53·510	4 17 20·15	1	...	ι′	20 0 46·710	7 19 54·55	2	−25 −20
p	35 55·964	4 32 48·22	5	+14 − 2	κ	1 3·680	8 29 58·95	2	0 −25
q	39 23·680	4 47 21·34	7, 8	−30 +16	μ	5 8·859	9 10 11·96	10	− 1 + 4
r	40 59·445	3 55 59·68	4	+10 + 2	C	14 31·504	6 42 27·33	9, 10	− 6 − 3
s	41 53·332	5 30 21·12	5	+ 2 − 2	D	19 55·079	3 9 35·09	10	− 1 − 4

The Right Ascensions observed July 8, and the Declinations of **B**, August 5, are excluded from these means. The seven stars observed on one day only were overlooked by the computer, and inserted in the table reduced with the "later values" of the day corrections changed, by $+0^{s}\cdot01$ and $-0''\cdot1$, to conform with the observer's system.

Comparing the separate reduced observations with these means, the mean error of one observation is found—

for the reference stars $\pm0^{s}\cdot058$ $\pm0''\cdot70$ from 46 and 47 observations respectively of 4 stars
„ other stars $0^{s}\cdot055$ $0''\cdot77$ „ 128 „ 134 „ „ „ 29 „

or, without distinction, from all the 33 stars observed on more than one day:
$\pm0^{s}\cdot055$ from 174 and $\pm0''\cdot75$ from 181 observations.

The Right Ascensions were determined chronographically. No further information is given how the observations were made and reduced, and what was the share of each of the two observers in the series.

Digitized by Google

BERLIN.

The observations were made, as in the other two series, with the larger of the two Transit-Circles of the Observatory. Dr. Küstner writes as follows about the methods of observation and reduction :—

The *Victoria* stars were observed in 26 zones between June 6 and October 5, 1889. the zero-points for which, both for Right Ascension and Declination, were determined by neighbouring stars of the fundamental list for the Southern Zones of the *Astronomische Gesellschaft*, using the places given in No. 2890—1 of the *Ast. Nach.* and with the addition of β Aquilæ, a^1 Capricorni and ε Delphini. The places of the three latter stars were taken from the ephemeris of the *Berliner Jahrbuch*, but the Declinations were duly reduced to the system of the Preliminary Catalogue for the Southern Zones. Ten fundamental stars were used altogether, and generally five or six of them were observed on each single evening ; the reference star **A** was also observed on every day from the fact that it also belongs to the list of No. 2890—1 of the *Ast. Nach.*, and it was used with half weight in the formation of the zero-points. The average magnitude of the stars employed for zero-points is = 4·0.

In this manner, preliminary values of the Right Ascension and Declination of the *Victoria* stars, as well as apparent corrections to the tabular places of the 16 fundamental stars were obtained. Then, employing indiscriminately the preliminary places of the reference and comparison stars, as well as the corrected places of the fundamental stars, new values of the clock-corrections and equator-points and of their variations were found for each zone. From the determination of these zero-points however, five stars, which had been observed less than four times each, were excluded. With the new zero-points new values of the Right Ascension and Declination were derived, which might be regarded as the final results of the series, as a third approximation starting from them would give clock-corrections and equator-points very nearly identical with those of the second approximation (the greatest difference for one day being $0^s{\cdot}003$ and $0''{\cdot}03$), while for the means of the star places, the greatest difference between the first and second approximations was $0^s{\cdot}010$ and $0''{\cdot}10$. The third approximation of zero-points, however, was made use of in the final reductions of the observations of the planet itself.

No regard was paid to the four different positions of the instrument (see *Iris* series) as repeated former experience had shown this to be superfluous ; the observations, however, are nearly equally distributed over the different positions, and each star has been observed once at least in each position, with the sole exception of star ι', which was not used in the heliometer comparisons with the planet.

The mean error of one finally reduced observation, including that part which

Digitized by Google

might vary from one position of the instrument to another, was found, from all the stars which were observed at least four times—

for R.A. $\pm 0^{s}\cdot0209$ from 478 obs. ; for Dec. $\pm 0''\cdot319$ from 474 obs.

From the separate places of the first approximation these values would have been $\pm 0^{s}\cdot0231$ and $\pm 0''\cdot357$; the increase of accuracy gained by the second determination of the zero-points is, therefore, quite perceptible, though in the first approximation the mean error was already very small. The accuracy appears to be very nearly the same for all of the stars ; approximately the mean error of one observation is found—

	in R.A.	in Dec.
for the 10 fundamental stars	$\pm 0^{s}\cdot021$	$\pm 0''\cdot34$
„ „ 4 reference stars	0·020	0·27
„ 18 comparison stars mag. 5·0 to 7·8	0·018	0·32
„ 19 „ „ „ 8·0 to 8·5	0·024	0·32

The following are the final individual results communicated by Dr. Küstner.

Mean Places for Equinox 1889·0.

1889		Position of Instrument	A		B		C		D		Atmospheric condition	Remarks
			$19^{h}\ 6^{m}$	$-8°\ 7'$	$19^{h}\ 14^{m}$	$-5°\ 37'$	$20^{h}\ 14^{m}$	$-6°\ 42'$	$20^{h}\ 19^{m}$	$-3°\ 9'$		
			s	″	s	″	s	″	s	″		
June	6	II	39·431	28·00	37·355	20·45	31·522	28·86	55·071	34·92	2–3	Last stars observed in strong twilight without artificial illumination.
	7	IV	·447	26·65	·367	20·34	·491	28·31	·074	35·23	2–3	
	8	II	·444	27·12	·353	19·80	·481	28·78	·089	35·11	2–3	
	10	II	·416	27·58	·364	20·27	·513	28·90	·072	35·27	2–3	
	17	III	·455	27·89	·330	19·66	·498	28·41	·059	34·94	3–4	
	18	III	·445	27·27	·375	20·10	·525	28·34	·083	34·95	2, 2–3	
	20	I	·405	27·44	·331	19·85	·511	28·04	·104	35·28	3	
	21	I	·457	27·45	·331	19·98	·545	28·34	·088	35·69	2–3	
	22	I	·436	27·19	·306	20·26	·522	28·31	·049	35·29	3	
	24	IV	·418	27·31	·345	20·53	·551	28·61	·076	34·89	2	Afterwards 3.
	26	IV	·491	26·97	·322	20·68	·511	28·40	·076	35·14	2	
July	31	II	·445	27·38	·346	20·29	·508	28·48	·098	35·23	2–3	
Aug.	1	II	·443	27·35	·372	20·07	·528	28·97	·090	35·30	2–3, 3	Hazy.
	7	I	·424	27·15	·340	20·08	·508	28·43	·079	35·76	2–3	
	8	III	·445	27·46	·342	20·70	·492	28·13	·056	35·26	2–3	Bright moonshine.
	9	III	·435	27·26	·373	20·15	·540	28·40	·094	35·14	2	Afterwards 2–3 through clouds.
	12	I	·413	27·54	·317	20·21	·503	28·57	·060	35·20	3	
	16	I	·449	27·46	·338	20·55	·505	28·35	·064	35·31	2–3	
	18	III	·441	27·37	·324	20·35	·502	28·08	·046	35·58	2	Hazy ; stars faint.
	25	II	·428	27·04	·332	20·23	·524	28·04	·089	35·71	2–3	
	30	IV	·453	27·50	·359	19·77	·521	28·62	·089	35·76	2–3, 3	
	31	IV	·459	27·24	·309	20·76	·535	28·15	·081	35·44	2–3	
Sept.	15	III	·457	27·05	·345	20·17	·499	28·53	·073	35·44	2–3	
	18	III	·413	27·30	·356	20·31	·516	28·60	·071	35·38	2–3	Some haze.
Oct.	4	II	·426	27·58	·385	20·53	·534	28·80	·077	35·33	2–3, 3	
	5	I	·435	27·86	·386	20·56	·525	28·64	·049	35·21	3	Hazy.

Digitized by Google

1889	Position of Instrument	α	δ (south)
a		s	″
June 8	II	25·236	21·55
17	III	·205	20·18
26	IV	·215	20·71
Aug. 12	I	·213	21·05
30	IV	·236	20·63
b			
June 7	IV	2·507	0·71
10	II	·521	0·56
18	III	·534	0·82
21	I	·504	0·58
Sept. 18	III	·495	0·26
Oct. 4	II	·528	1·05
c			
June 6	II	6·263	5·83
20	I	·238	6·24
24	IV	·249	6·52
Aug. 8	III	·217	6·17
9	III	·232	6·49
Oct. 5	I	·205	5·91
d			
June 8[1]	II	17·955	12·61
17	III	·951	11·96
21	I	·946	12·23
26	IV	·950	12·25
Aug. 1	II	·978	12·27
7	I	·969	12·47
Sept. 15	III	·896	12·12
e			
June 7	IV	40·313	2·70
18	III	·339	2·50
22	I	·269	2·56
July 31	II	·277	2·47
Aug. 12[2]	I	·334	1·90
Sept. 18	III	·336	2·47
Oct. 4	II	·314	2·55
f			
June 10	II	50·523	49·02
20	I	·507	49·01
21	I	·484	49·33
24	IV	·529	48·16[3]
Aug. 1	II	·500	48·46
Sept. 18	III	·513	49·17
Oct. 4	II	·531	48·70
g			
June 6	II	37·633	23·63
7	IV	·642	23·59
Aug. 25	II	·603	23·13
Sept. 15	III	·592	22·91
Oct. 5	I	·610	23·33
h			
June 8	II	20·715	5·83
18[2]	III	·742	5·67
Aug. 16	I	·749	5·86
30	IV	·741	5·46
i			
June 17	III	41·169	2·98
21	I	·154	2·36
Aug. 12	I	·155	1·72
25	II	·127	2·82
31	IV	·177	2·68
Sept. 18	III	·149	2·32
k			
June 20	I	53·382	44·05
24	IV	·416	43·69
Aug. 9	III	·349	43·42
18	III	·381	43·56
Oct. 4	II	·385	43·48
l			
June 7	IV	22·132	18·76
10	II	·122	18·82
Aug. 7	I	·097	18·89
8	III	·101	18·46
m			
June 6	II	54·009	39·76
18[2]	III	·012	39·96
22	I	53·995	40·04
26	IV	·983	39·93
Aug. 30	IV	54·020	40·03[4]
Sept. 15	III	·003	39·78
Oct. 5	I	53·980	40·70
n			
June 8	II	26·841	8·14
20[2]	I	·884	7·01
24	IV	·900	7·97
Aug. 9	III	·854	7·49
16	I	·896	7·32
o			
June 7	IV	53·512	21·58
18	III	·501	21·07
21	I	·523	21·19
Aug. 1	II	·511	21·33
p			
June 6	II	55·976[5]	49·57
10	II	56·028	48·85
17	III	·009	49·79
22	I	·025	49·45
26	IV	·045	49·62
Aug. 7	I	55·998	49·08
8	III	56·017	49·58
12	I	·009	49·29
18	III	·023	49·17
25	II	·013	48·99
30	IV	·015	49·55
Sept. 18	III	·035	49·12[4]
Oct. 4	II	·009	49·18
q			
June 7	IV	23·677	22·06
8	II	·636	21·85
18	III	·689	22·12
20[6]	I	·734	22·11
Aug. 1	II	·665	22·45
7	I	·668	21·96
9	III	·666	22·39
30	IV	·665	21·86
Oct. 4	II	·716	21·93
5	I	·689	22·19

[1] Faint and diffused. [2] Through clouds. [3] Undulating; too northerly? [4] Undulating.
[5] 4 wires only, weight assumed ½. [6] Somewhat uncertain, through clouds.

Digitized by Google

1889	Position of Instrument	α	δ (south)
r		s	″
June 21	I	59·479	0·59
24	IV	·506	1·20
July 31	II	·512	0·85
Aug. 16	I	·521	0·56
Sept. 15	III	·499	0·36
s			
June 18	IV	53·307	22·74
20	I	·301	22·83
Aug. 1	II	·300	22·52
31	IV	·283	22·34
t			
June 6	II	4·478	17·93
10	II	·461	18·24
17	III	·464	18·50
22	I	·467	18·62
26	IV	·466	18·35
Aug. 7	I	·475	18·15
8	III	·487	18·18
12	I	·479	18·57
18	III	·448	17·62
25	II	·483	18·17
30	IV	·456	17·94
Sept. 18	III	·478	18·17
Oct. 4	II	·499	18·04
u			
June 7	IV	43·816	25·60
8	II	·824	24·77
21	I	·864	25·12
Aug. 9	III	·801	25·30
Oct. 5	I	·805	24·76
v			
June 18	III	56·178	26·58
20	I	·181	27·22
24	IV	·222	[28·67 [1]]
July 31	II	·172	26·64
Aug. 1	II	·228	27·01
16	I	·168	27·02
31	IV	·193	27·24
Sept. 15	III	·162	27·12
w			
June 6	II	27·178	32·57
7	IV	·230	32·50
20	I	·191	32·29
21	I	·186	32·22
Aug. 1	II	·196	32·47
8	III	·205	32·15
9	III	·168	31·64
25	II	·204	32·77
x			
June 8	II	22·400	60·05
10	II	·404	59·83
17	III	·378	59·94
18	III	·361	59·98
22	I	·385	59·35
24	IV	·404	60·29
Aug. 7	I	·394	60·46
30	IV	·383	60·50
y			
June 6	II	25·867	54·01
21	I	·853	53·99
Aug. 1	II	·873	53·89
8	III	·906	53·99
16	I	·868	54·05
18	III	·881	54·29
30	IV	·868	53·57
z			
June 18	III	3·470	58·75
20	I	·496	59·23
24	IV	·483	59·17
July 31	II	·517	58·59
Aug. 12 [2]	I	·516	58·50
Sept. 18	III	·507	58·54
α			
June 8	II	18·134	55·42
17	III	·079	55·95
22	I	·187	55·48
Aug. 25	II	·111	55·60
31	IV	·107	55·44
β			
June 7	IV	38·067	16·79
10	II	·009	16·60
Aug. 7	I	·027	17·09
Sept. 15	III	·012	16·11
Oct. 4	II	·027	16·83
γ			
June 18	III	57·326	52·10
20	I	·285	51·91
26	IV	·345	52·22
Aug. 1 [3]	II	·320	52·53
30	IV	·309	52·43
Sept. 18	III	·347	52·33
Oct. 4	II	·344	52·08
δ			
June 7	IV	39·743	49·12
21	I	·784	49·13
July 31	II	·735	48·85
Aug. 9 [4]	III	·773	49·74
18	III	·769	48·83
Oct. 5 [5]	I	·758	48·78
ϵ			
June 6	II	17·673	49·01
22	I	·670	48·36
24	IV	·701	48·55
Aug. 8	III	·651	48·49
16	I	·655	48·32
ζ			
June 17	III	4·774	14·87
Aug. 7	I	·770	13·96
12	I	·788	14·45
25	II	·786	13·86
31	IV	·812	14·05
Sept. 18	III	·785	13·77 [6]
η			
June 8 [4]	II	21·786	27·36
10	II	·723	27·94
18	III	·723	27·74
20	I	·772	28·78
Aug. 30	IV	·719	27·57
Sept. 15	III	·706	28·07
Oct. 4	II	·725	28·08
θ			
June 7	IV	23·788	57·45
Aug. 1	II	·820	58·12
7	I	·811	57·28
18	III	·876	57·48
Sept. 18	III	·774	57·05
Oct. 5	I	·758	57·69

[1] Declination observed in haste — pointing too far South?
[2] Faint.
[3] Observed in haste.
[4] Through clouds.
[5] Faint and diffused.
[6] Too Northerly?

Digitized by Google

1889	Position of Instrument	α	δ (south)	1889	Position of Instrument	α	δ (south)	1889	Position of Instrument	α	δ (south)
ι		s	″	λ		s	″	μ		s	″
July 31	II	44·837	3·83	June 24	IV	45·799	32·81	June 18	III	8·911	12·77
Aug. 9	III	·886	3·99	Aug. 1	II	·796	32·55	20[2]	I	·947	12·67
16	I	·852	3·77	7	I	·792	32·94	21	I	·907	13·15
30	IV	·870	4·21	9[1]	III	·876	33·41	26	IV	·932	12·74
ι'				18	III	·823	32·97	Aug. 1	II	·911	12·93
Sept. 15	III	46·712	55·15	30	IV	·818	33·48	7	I	·938	12·74
Oct. 4	II	·687	55·51	Sept. 18	III	·793	33·17	9	III	·922	13·07
κ				Oct. 4	II	·816	32·82	25	II	·924	12·44
Aug. 8	III	3·703	59·22	5	I	·831	33·36	30	IV	·888	12·46
12	I	·695	58·61								
25	II	·705	59·04								
31	IV	·699	58·76								

[1] Faint, through clouds. [2] Somewhat uncertain, through clouds.

The means are contained in the following table, in which are also given the corrections required by the Right Ascensions depending on magnitude, as taken from the table given with the *Iris* stars. The magnitudes used as argument for these corrections are discussed in a subsequent chapter.

Star	R.A. 1889	Corr.	Dec. 1889	Obs.	Star	R.A. 1889	Corr.	Dec. 1889	Obs.
	h m s	s	° ′ ″			h m s	s	° ′ ″	
A	19 6 39·439	—0·002	— 8 7 27·36	26	u	19 43 43·822	—0·018	— 4 48 25·11	5
B	14 37·346	— 0·	5 37 20·26	26	v	44 56·188	— 7	4 58 26·98	8, 7
a	21 25·221	— 16	5 57 20·82	5	w	47 27·195	— 20	4 51 32·33	8
b	23 2·515	— 20	6 24 0·66	6	x	48 22·389	— 19	5 20 0·05	8
c	24 6·234	— 22	5 9 6·19	6	y	51 25·874	— 19	4 58 53·97	7
d	25 17·949	— 21	5 54 12·27	7	z	52 3·498	— 22	5 28 58·80	6
e	25 40·312	— 20	5 21 2·45	7	α	52 18·124	— 18	6 38 55·58	5
f	27 50·512	— 13	4 58 48·84	7	β	52 38·028	— 18	4 39 16·68	5
g	28 37·616	— 22	4 41 23·32	5	γ	54 57·325	— 12	4 36 52·23	7
h	29 20·737	— 16	4 33 5·70	4	δ	55 39·760	— 20	6 40 49·07	6
i	30 41·155	— 15	5 1 2·48	6	ϵ	56 17·670	— 7	5 17 48·55	5
k	30 53·383	— 17	4 32 43·64	5	ζ	57 4·786	— 18	8 0 14·16	6
l	31 22·113	— 18	3 43 18·73	4	η	57 21·736	— 19	4 56 27·93	7
m	31 54·000	— 2	4 53 40·03	7	θ	59 23·805	— 21	6 53 57·51	6
n	34 26·875	— 7	5 42 7·59	5	ι	20 0 44·861	— 9	4 44 3·95	4
o	34 53·512	— 14	4 17 21·29	4	ι'	0 46·700	— 17	7 19 55·33	2
p	35 56·017	— 14	4 32 49·33	13	κ	1 3·700	— 13	8 29 58·91	4
q	39 23·681	— 21	4 47 22·09	10	λ	2 45·816	— 19	7 20 33·06	9
r	40 59·503	— 17	3 56 0·71	5	μ	5 8·920	— 6	9 10 12·77	9
s	41 53·298	— 17	5 30 22·61	4	C	14 31·516	— 5	6 42 28·46	26
t	43 4·472	— 17	— 4 46 18·19	13	D	19 55·075	— 4	— 3 9 35·30	26

Digitized by Google

BORDEAUX.

The following results of observations made with the Gautier Meridian-Circle were communicated by M. Rayet :—

1889	Position of Instrument	α	δ (south)	1889	Position of Instrument	α	δ (south)	1889	Position of Instrument	α	δ (south)
A		s	″	**h**		s	″	**s**		s	″
July 19	I	39·36	27·1	July 24	D	20·75	7·6	July 29	D	53·22	22·2
B				Aug. 12	I	20·87	3·9	Aug. 5	I	53·29	20·8
July 19	I	37·24	17·4	**k**				**t**			
a				Aug. 2	D	53·31	43·1	Aug. 2	D	4·42	17·3
July 19	I	25·20	19·4	3	I	53·40	43·3	3	I	4·46	17·1
24	D	25·07	22·4	31	D	53·41	44·8	28	D	4·63	17·1
b				**l**				31	D	4·52	18·8
July 27	D	2·58	1·0	July 28	D	22·32	18·6	Sept. 4	D	4·50	16·5
c				**m**				5	D	4·48	18·0
July 28	D	6·36	5·4	July 19	I	53·95	40·0	**u**			
Aug. 3	I	6·17	4·6	29	D	53·46	40·4	Aug. 13	I	43·99	26·9
31	D	6·21	7·1	Sept. 4	D	54·07	39·1	**v**			
d				6	D	54·03	41·4	July 19	I	56·29	25·5
July 19	I	17·97	12·1	**n**				28	D	56·32	25·9
24	D	17·81	13·7	July 24	D	26·89	8·6	**w**			
Sept. 4	D	17·92	12·5	Aug. 3	I	26·86	6·8	Aug. 2	D	27·26	31·9
e				31	D	26·88	8·5	3	I	27·21	31·0
July 29	D	40·25	3·2	**o**				28	D	27·35	32·8
Aug. 5	I	40·33	0·9	July 29	D	53·48	21·2	31	D	27·21	32·9
Sept. 5	D	40·26	3·9	Aug. 5	I	53·57	20·8	**x**			
f				**p**				July 19	I	22·54	58·7
Aug. 2	D	50·48	47·4	July 19	I	56·09	48·8	27	D	22·44	60·6
3	I	50·46	48·2	Sept. 5	D	56·01	48·6	Sept. 4	D	22·36	59·1
31	D	50·52	50·0	7	I	56·12	50·1	7	D	22·33	60·3
Sept. 17	I	50·46	49·4	**q**				**y**			
g				July 24	D	23·65	22·7	July 24	D	25·79	54·4
July 19	I	37·31	23·4	28	D	23·70	19·5	Aug. 3	I	25·85	53·7
29	D	37·57	24·1	Aug. 3	I	23·68	20·9	28	D	26·07	53·9
Sept. 4	D	37·62	22·3	Sept. 4	D	23·69	21·4	31	D	25·93	54·3
				r				**z**			
				July 19	I	59·61	59·7	July 19	I	3·53	58·6
				27	D	59·51	64·6	28	D	3·57	58·1
								Sept. 4	D	3·47	57·4
								5	D	3·46	59·4

Digitized by Google

1889	Position of Instrument	α	δ (south)	1889	Position of Instrument	α	δ (south)	1889	Position of Instrument	α	δ (south)
α		s	″	ϵ		s	″	ι		s	″
July 29	D	18·10	55·9	Aug. 2	D	17·61	48·2	July 29	D	44·87	4·0
Aug. 5	I	18·03	55·0	12	I	17·68	49·8	Aug. 3	I	44·85	4·2
12	D	18·04	56·4	Sept. 4	D	17·59	46·7				
				6	D	17·78	50·6	ι'			
				7	D	17·63	48·4				
β								Aug. 2	D	46·69	54·4
Aug. 2	D	38·07	14·7					5	I	46·67	55·3
13	I	38·06	14·2	ζ				31	D	46·73	56·1
				Aug. 22	I	4·78	15·8	Sept. 4	D	46·74	53·5
								5	D	46·59	55·2
γ											
July 24	D	57·31	53·6	η				κ			
27	D	57·53	52·9	July 28	D	21·84	25·9	July 27	D	3·69	59·6
Aug. 3	I	57·30	50·9	Aug. 26	I	21·78	29·3				
								μ			
								July 19	I	8·97	10·3
δ				θ				24	D	8·99	11·4
July 29	D	39·66	48·9	July 19	I	23·92	57·0	28	D	9·04	12·7
Aug. 28	D	39·84	49·1	24	D	23·73	57·9	Aug. 28	D	8·93	13·0
31	D	39·80	50·1	Aug. 28	I	23·91	58·2	Sept. 7	D	8·70	11·9

There seems to have been some misunderstanding about the reference stars, of which only two observations were made, both on the first day. For star i a wrong star was observed on July 27, and the replacement of star ι by λ appears not to have come under the observer's notice, as has happened in several other instances.

The daily observations differ from the simple means by the following quantities :—

1889	$\Delta\alpha$	$\Delta\delta$	No. Stars	1889	$\Delta\alpha$	$\Delta\delta$	No. Stars	1889	$\Delta\alpha$	$\Delta\delta$	No. Stars
	s	″			s	″			s	″	
July 19*	+ 0·028	+ 0·77	11	Aug. 3*	− 0·033	+ 0·74	9	Aug. 31	+ 0·012	− 0·92	9
24	− 0·054	− 0·81	9	5*	+ 0·016	+ 0·62	5	Sept. 4	+ 0·026	+ 0·90	9
27	+ 0·040	− 1·23	3	12*	+ 0·020	+ 0·07	3	5	− 0·048	− 0·48	5
28	+ 0·057	+ 0·47	6	13*	0·00	+ 0·3	1	6	+ 0·135	− 1·55	2
29	− 0·065	− 0·26	8	26*	− 0·03	− 1·7	1	7*	− 0·064	− 0·36	5
Aug. 2	− 0·026	+ 0·43	7	28	+ 0·085	− 0·22	6				

On the days marked with an * the instrument was in "position inverse," and in the mean of those five days on which more than a single star was observed, the deviation

Digitized by Google

from the general mean is $-0^s\cdot007$ and $+0''\cdot37$. A reduction $-0''\cdot5$ was applied to the Declinations observed in "position inverse" August 13 and 22, while the isolated Right Ascensions of these days and the single observation of August 26 were used without change. For the other days, the quantities of the above table taken to the nearest $0^s\cdot01$ and $0''\cdot1$ were subtracted from the observed positions, only for September 6 the result of a second approximation was used instead, viz., $+0^s\cdot18$ and $-1''\cdot6$. The means of the observations thus reduced to approximate homogeneity became the following:—

Star	Adopted Place, Eq. 1889·0		Obs.	II — I	Star	Adopted Place, Eq. 1889·0		Obs.	II — I
	h m s	° ′ ″				h m s	° ′ ″		
A	19 6 39·33	— 8 7 27·9	1	...	t	19 43 4·500	— 4 46 17·53	6	0 — 3
B	14 37·21	5 37 18·2	1	...	u	43 43·99	4 48 27·4	1	...
a	21 25·145	5 57 20·90	2	+ 5 0	v	44 56·260	4 58 26·35	2	—50 —65
b	23 2·54	6 23 59·8	1	...	w	47 27·250	4 51 32·15	4	—10 + 5
c	24 6·233	5 9 5·80	3	—17 —10	x	48 22·408	5 19 59·70	4	—12 0
d	25 17·897	5 54 13·07	3	— 3 —27	y	51 25·908	4 58 53·78	4	— 2 +32
e	25 40·280	5 21 2·97	3	0 —27	z	52 3·490	5 28 58·80	4	—20 —40
f	27 50·508	4 58 48·70	4	+28 +10	α	52 18·063	6 38 55·90	3	+ 3 —10
g	28 37·500	4 41 23·73	3	0 —43	β	52 38·080	4 39 14·90	2	+20 —40
h	29 20·825	4 33 5·40	2	+15 +40	γ	54 57·393	4 36 52·03	3	+13 +47
k	30 53·390	4 32 43·80	3	+20 —10	δ	55 39·757	6 40 48·90	3	—13 +50
l	31 22·26	3 43 19·1	1	...	ε	56 17·630	5 17 48·62	5	—30 + 8
m	31 53·832	4 53 40·18	4	—48 + 2	ζ	57 4·78	8 0 16·3	1	...
n	34 26·900	5 42 7·63	3	+20 +37	η	57 21·770	4 56 27·85	2	—40 —25
o	34 53·545	4 17 21·15	2	+15 —15	θ	59 23·833	6 53 57·63	3	—17 + 7
p	35 56·100	4 32 49·13	3	+30 + 7	ι	20 0 44·905	4 44 4·30	2	+45 —20
q	39 23·678	4 47 21·45	4	— 2 —35	ι′	0 46·688	7 19 55·00	5	+ 8 —10
r	40 59·525	3 56 1·95	2	—35 +25	κ	1 3·65	8 29 58·4	1	...
s	41 53·275	5 30 21·65	2	+15 —15	μ	5 8·914	9 10 11·84	5	—16 + 6

These places are referred to the Fundamental Catalogue of the *Astronomische Gesellschaft*. The mean error of one observation is found, for the reduced positions, in R.A. $\pm0^s\cdot087$, in Dec. $\pm0''\cdot86$; both from 101 observations. The large amount of mean error makes it probable that the Right Ascension was observed by eye and ear.

CAMBRIDGE (ENG.).

Observations were made with the Transit-Circle by Mr. A. Graham, by eye and ear, over seven wires, and always reading four microscopes. The mean results of these observations are published in the *Monthly Notices*, May 1890. The individual results for 1889·0, depending probably for Right Ascension on the Berlin Fundamental

Digitized by Google

Catalogue, and for the Declination on nadir points and a co-latitude, derived, as on other occasions, with the Declinations of the *Berliner Jahrbuch*, are published in the *Monthly Notices* for March 1891. It is unnecessary, therefore, to reproduce these data here. Some corrections however are to be indicated which are required by the printed means, viz., R.A. no. 11 for 22·06 read 22·09 ; Dec. no. 14 for 22·63 read 22·71, no. 25 for 2·07 read 0·21.

Day corrections were derived by comparing with their means the observations of the four reference stars (of which, however, rather an irregular use was unfortunately made also in this otherwise fine series) and of those three comparison stars which were most frequently observed (seven or eight times). None of these stars however happened to be observed on June 25 ; for this day, therefore, the correction was determined from all the other stars in the same manner, and a similar plan was afterwards followed for July 30, August 5, 7, 17 and September 7, when only a few of the seven stars chiefly employed were observed.

The following table exhibits the day corrections thus used to reduce the observed positions to approximate homogeneity, and opposite them are given the values found later from a comparison with the definitive normals, and used in the reduction of the planet observations. The differences between the two systems show that some improvement could still be made in the reduction to homogeneity, but it would produce a trifling effect only upon any of the Cambridge means and no sensible effect whatever upon the general means.

1889	Day Correction used for Stars			Later Values			1889	Day Correction used for Stars			Later Values		
	$\Delta\alpha$	$\Delta\delta$	No. St.	$\Delta\alpha$	$\Delta\delta$	No. St.		$\Delta\alpha$	$\Delta\delta$	No. St.	$\Delta\alpha$	$\Delta\delta$	No. St.
	s	″		s	″			s	″		s	″	
June 25	+ 0·016	+ 0·07	8	+ 0·008	+0·31	8	Aug. 3	— 0·034	— 0·02	3	+ 0·004	+0·29	11
26	— 0·097	— 0·67	3	— 0·141	—0·77	10	5	+ 0·041	— 0·20	10	+ 0·053	+0·07	11
27	— 0·016	— 0·29	5	— 0·051	0·00	10	6	+ 0·011	0·00	5	+ 0·005	+0·09	11
July 1	— 0·023	— 0·64	2	...	...	...	7	+ 0·051	— 0·21	3	...	...	
5	+ 0·005	+ 0·01	5	— 0·004	—0·21	16	15	— 0·016	+ 0·09	4	+ 0·024	—0·09	11
8	— 0·047	+ 0·43	3	...	...	...	17	— 0·039	+ 0·71	5	— 0·087	+0·30	5
11	+ 0·003	— 0·16	6	— 0·004	—0·12	15	28	+ 0·001	— 0·12	6	...	...	
17	[+ 0·017	+ 0·31]*	1	...	...	...	29	+ 0·030	+ 0·07	6	+ 0·057	—0·11	8
18	— 0·022	+ 0·43	4	— 0·047	+0·01	8	31	+ 0·021	+ 0·32	6	...	...	...
23	+ 0·065	— 0·22	4	+ 0·056	—0·61	12	Sept. 6	+ 0·018	+ 0·69	4	...	...	...
30	— 0·052	+ 0·16	6	— 0·071	—0·16	6	7	+ 0·016	— 0·11	3	...	...	...
31	[— 0·050	— 1·13]*	1										

* Isolated observation of reference star only ; employed for mean without correction.

Digitized by Google

After applying the corrections, the following means were found :—

Star	Adopted places, Eq. 1889·0		Obs.	Star	Adopted places, Eq. 1889·0		Obs.	Star	Adopted places, Eq. 1889·0		Obs.
	h m s	° ′ ″			h m s	° ′ ″			h m s	° ′ ″	
A	19 6 39·455	−8 7 27·72	20	n	19 34 26·948	−5 42 8·15	3	β	19 52 38·114	−4 39 18·52	2
B	14 37·338	5 37 22·12	20	o	34 53·539	4 17 22·74	5	γ	54 57·382	4 36 53·75	3
a	21 25·297	5 57 22·32	3	p	35 56·071	4 32 50·96	7	δ	55 39·841	6 40 50·47	3
b	23 2·541	6 24 2·28	2, 3	q	39 23·759	4 47 23·90	4	ε	56 17·668	5 17 50·29	3
c	24 6·297	5 9 7·95	3	r	40 59·484	3 56 1·71	5	ζ	57 4·828	8 0 14·70	3
d	25 17·996	5 54 13·76	4	s	41 53·445	5 30 24·84	2	η	57 21·770	4 56 29·71	3
e	25 40·397	5 21 3·92	5	t	43 4·517	4 46 19·46	8	θ	59 23·842	6 53 58·42	4
f	27 50·549	4 58 50·39	5	u	43 43·986	4 48 25·57	2	ι	20 0 44·928	4 44 5·50	2
g	28 37·764	4 41 25·26	3	v	44 56·134	4 58 28·42	2	ι′	0 46·749	7 19 56·40	5
h	29 20·723	4 33 6·81	3	w	47 27·286	4 51 33·62	4	κ	1 3·756	8 29 59·78	2
i	30 41·217	5 1 3·41	3	x	48 22·430	5 20 1·41	4	μ	5 8·969	9 10 12·95	7
k	30 53·455	4 32 44·95	3	y	51 25·886	4 58 55·54	4	C	14 31·514	6 42 29·28	9
l	31 22·121	3 43 20·10	2	z	52 3·600	5 28 0·33	4	D	19 55·100	3 9 36·28	8
m	31 54·025	4 53 41·65	4	α	52 18·204	6 38 57·24	4				

For the stars generally used to determine the day corrections, the corrections of the former means become—

A	−0ˢ·002 −0″·01	p	+0ˢ·001 +0″·04
B	+0·001 +0·04	t	−0·016 −0·02
C	+0·011 +0·08	μ	−0·019 −0·08
D	+0·012 +0·13		

The Right Ascension of b, July 8, differs 0ˢ·27 from the mean of the two other observations and has been excluded ; the star was very faint in this observation.

The mean error of one reduced observation is found to be—

from 57 observations of the reference stars : in R.A. ±0ˢ·059 ; in Dec. ±0″·61
„ the observations of the comparison stars (α 135, δ 136) : „ ±0·064 ; „ ±0·53

The general mean is : for R.A. ±0ˢ·063 (from 192 observations) ; for Dec. ±0″·55 (from 193 observations).

CAMBRIDGE (MASS.).

Observations of the *Victoria* stars were made with the Transit-Circle from May 29 to August 6, and some additional observations of the planet were also obtained during the latter half of August in connection with the observations of the A.G. Zone −10° ... −14°. Mr. A. Searle observed at the telescope, an assistant, Mr. J. A. Dunne, reading two microscopes. The instrument remained in the same position throughout the series ; the same divisions, therefore, came under the microscopes in every instance, and no corrections for division error were applied, but these, in another investigation by Professor Rogers, have been found to be quite small, at least for the principal lines.

Digitized by Google

The fundamental stars were selected from the list for the zones *Ast. Nach.* 2890—1; generally four or five of them were observed before the beginning of the zone, and an equal number at the end, care being taken to add to those selected for the A.G. Zone under observation some more northern ones so as to include the declination of the *Victoria* stars. Generally however the mean declination of the zero stars was considerably south of the Victoria zone.

The transits were observed by chronograph over lines ruled on a glass plate, which however were too fine to be clearly seen with the amount of light which could be admitted to illuminate the field when a faint star was to be observed. The observer says that this often diminished both the number of lines over which the fainter stars could be observed, and the precision of the observations of such stars as were actually made; and he finds the effect of both these conditions of observation is a rapid increase of probable error, for which he gives, from the present series, the following values for five succeeding groups :—

No. of Stars	Mean of estimates of Magnitude	Probable error of one compl. Obs.
		s
6	5·9	0·039
6	7·5	0·035
10	8·1	0·051
13	8·4	0·070
6	8·6	0·079

The pointings for declination were replaced, as is at present the general practice in Cambridge, by observing the transit over inclined lines ruled on the glass plate. In these the observer noted the same difficulty with the faint stars as for R.A., but he had the impression that the increase of error due to it was only comparatively small.

The mean places 1889·0 contained in the following tables, as observed, were communicated by Professor Pickering.

Observations of Reference Stars.

1889	A		B		C		D		General Remarks for the Separate Zones.
	19h 6m	-8° 7′	19h 14m	-5° 37′	20h 14m	-6° 42′	20h 19m	-3° 9′	
	s	″	s	″	s	″	s	″	
June 6	39·41	25·8	37·36	18·4	31·52	27·4	55·12	36·4	
13	·45	27·1	·39	21·4	·45	28·5	·10	34·9	Thick haze; observations difficult.
18	·49	27·0	·38	19·7	·62	27·9	·13	35·5	Hazy; stars generally faint.
22	·34	26·6	·29	19·6	·47	27·8	·13	36·7	
29	·34	24·8	·33	19·3	·53	25·9	·04	36·8	
July 5	·40	27·0	·35	19·9	·64	27·2	·08	36·0	Haze rather thick, images faint, moderately steady.
15	·51	26·8	·31	19·4	·54	28·6	·09	35·0	Images bright, unsteady, rather large.
18	·47	25·9	·34	19·4	·50	28·5	·15	35·6	Images of average quality.
21	·41	27·2	·35	20·3	·51	27·6	·06	34·6	Rather faint, unsteady, and large.
22	·48	26·2	·34	20·0	·56	25·6	·14	35·4	Moderately bright, rather steady, small.
Aug. 6	·50	26·1	·35	20·6	·66	27·0	·18	36·0	Rather bright, very steady, small.

Digitized by Google

Observations of Comparison Stars.

1889	α	δ (south)
a	s	"
May 29	25·09	21·6
June 6	·34	19·5
July 21	·21	20·1
b		
May 29	2·63	1·3
June 22	·43	1·2
July 21	·51	1·3
c		
June 6	6·35	5·8
18	[·67]	4·2
29	·29	5·9
d		
May 29	17·89	13·1
June 6	18·05	12·1
22	17·97	11·9
29	18·09	10·5
July 5	17·89	11·2
e		
July 15	40·45	2·0
18	·27	1·9
21	·46	3·8
22	·37	2·2
Aug. 6	·25	2·8
f		
May 29	50·46	47·9
June 6	·44	49·0
13	·60	49·6
18	·56	48·6
22	·49	49·4
g		
June 29	37·64	24·2
July 5	·65	21·8
15	·60	22·0
h		
June 6	20·84	4·7
18	20·84	6·6

1889	α	δ (south)
i	s	"
May 29	41·08	3·4
June 13	[·50]	1·9
18	·19	2·0
k		
June 6	53·52	43·3
22	·40	44·2
29	·37	43·8
l		
July 5	22·25	18·9
18	·14	19·4
m		
May 29	53·97	41·2
June 6	54·03	39·3
18	·12	41·3
22	·06	41·1
n		
May 29	26·94	7·8
June 6	·94	6·6
13	27·01	6·8
o		
June 18	53·66	21·8
29	·55	20·9
p		
May 29	56·10	48·0
June 6	55·97	48·9
18	56·01	49·9
22	·05	51·0
29	·03	48·5
July 5	·10	49·0
15	·03	49·1
18	·04	49·3
21	·00	49·8
22	55·94	49·5
Aug. 6	56·07	50·5

1889	α	δ (south)
q	s	"
May 29	23·70	22·3
June 6	·64	21·8
18	·94	22·8
22	·69	21·8
r		
May 29	59·53	62·4
June 6	·56	59·1
July 21	·54	60·6
s		
June 6	53·32	21·9
18	·53	22·3
July 21	·27	21·2
t		
May 29	4·51	18·7
June 6	·37	18·4
18	·63	18·3
22	·51	18·5
29	·50	17·5
July 15	·46	17·2
18	·48	17·3
Aug. 6	·57	18·6
u		
June 13	44·02	25·3
29	43·66	25·8
v		
May 29	56·14	26·4
June 6	·22	26·7
18	·29	27·1
July 22	·23	26·9
w		
May 29	27·28	32·3
June 6	·36	31·2
18	·40	34·0
22	·20	32·2

1889	α	δ (south)
x	s	"
June 29	22·37	59·9
July 15	·47	59·3
18	·55	59·8
21	·41	59·0
y		
May 29	25·99	53·7
June 6	26·00	53·2
18	·15	54·6
22	25·85	53·7
z		
June 29	3·58	58·6
July 15	·56	58·4
18	·36	59·4
21	·55	58·9
α		
July 22	18·21	54·8
Aug. 6	19	54·3
β		
May 29	38·05	15·7
June 18	·04	17·6
γ		
June 6	57·29	52·1
18	·35	52·3
δ		
June 22	39·73	47·8
29	·82	47·6
July 5	·78	46·9
ϵ		
June 18	17·79	48·8
July 15	·72	48·8
18	·60	49·1

1889	α	δ (south)
ζ	s	"
June 6	4·84	12·7
22	·74	13·4
July 5	·84	13·6
η		
May 29	21·79	28·4
July 15	·76	27·2
18	·72	28·5
θ		
May 29	23·81	58·5
June 6	·91	56·0
18	·95	57·7
29	·93	56·4
July 5	·91	57·9
ι		
June 13	44·97	3·6
18	·97	5·0
ι'		
June 6	46·76	56·6
29	·65	55·7
July 5	·65	55·9
15	·74	55·5
18	·70	56·7
κ		
May 29	3·66	59·6
July 21	·77	57·9
μ		
May 29	8·84	14·0
June 6	·86	15·0
13	·97	12·9
18	·95	12·2
22	·90	12·8

Digitized by Google

Generally a great number of the Victoria comparison stars were observed on each evening; day corrections therefore were determined by comparing the observations with the means from the tabulated results (excluding the two discordant Right Ascensions placed in brackets) without distinction of weights. The resulting values of $\Delta\alpha$ and $\Delta\delta$ are those first given in the following table :—

1889	Day Correction used for Stars			Later Values		1889	Day Correction used for Stars			Later Values	
	$\Delta\alpha$	$\Delta\delta$	No. Stars	$\Delta\alpha$	$\Delta\delta$		$\Delta\alpha$	$\Delta\delta$	No. Stars	$\Delta\alpha$	$\Delta\delta$
	s	″		s	″		s	″		s	″
May 29	+ 0·03	+ 0·3	19	...	...	July 5	− 0·01	− 0·1	12	...	...
June 6	0·00	− 0·3	25	...	...	15	− 0·01	− 0·3	13	− 0·003	−0·36
13	− 0·04	+ 0·1	9, 10	...	...	18	+ 0·02	+ 0·1	13	+ 0·030	+0·09
18	− 0·06	+ 0·3	23, 22	...	...	21	+ 0·01	0·0	13	+ 0·002	−0·11
22	+ 0·04	+ 0·2	17	+ 0·038	+0·15	22	0·00	− 0·3	8	− 0·007	−0·56
29	+ 0·02	− 0·3	17	+ 0·028	−0·28	Aug. 6	− 0·02	+ 0·3	8	− 0·033	−0·04

"Later values," derived afterwards for those days on which the planet had been observed, are given for comparison; they are very nearly the same as those used for the reduction, though some of the first means underwent a rather considerable change in the second approximation, which gave the following results :—

Star	Adopted place, Eq. 1889·0		Obs.	II − I		Star	Adopted place, Eq. 1889·0		Obs.	II − I	
	h m s	° ′ ″					h m s	° ′ ″			
A	19 6 39·432	−8 7 26·44	11	− 4	− 3	u	19 43 43·830	−4 48 25·65	2	−10	−10
B	14 37·340	5 37 19·85	11	− 5	− 3	v	44 56·212	4 58 26·78	4	− 8	0
a	21 25·227	5 57 20·40	3	+14	0	w	47 27·312	4 51 32·30	4	+ 2	+12
b	23 2·550	6 24 1·10	3	+27	+17	x	48 22·460	5 19 59·62	4	+10	−12
c	24 6·330	5 9 5·40	2, 3	+10	−10	y	51 26·000	4 58 53·68	4	+ 2	+12
d	25 17·994	5 54 11·80	5	+16	− 4	z	52 3·522	5 28 58·95	4	+10	−12
e	25 40·360	5 21 2·58	5	0	− 4	α	52 18·190	6 38 54·55	2	−10	0
f	27 50·504	4 58 48·78	5	− 6	+12	β	52 38·030	4 39 16·35	2	−15	+30
g	28 37·630	4 41 22·90	3	0	−23	γ	54 57·290	4 36 52·20	2	−30	0
h	29 20·810	4 33 5·65	2	−30	0	δ	55 39·793	6 40 47·50	3	+16	− 7
i	30 41·120	5 1 2·20	2, 3	−15	+23	ϵ	56 17·687	5 17 48·87	3	+16	+ 3
k	30 53·450	4 32 43·90	3	+20	−13	ζ	57 4·817	8 0 13·30	3	+10	− 7
l	31 22·200	3 43 19·15	2	+ 5	0	η	57 21·770	4 56 28·00	3	+13	+ 3
m	31 54·047	4 53 40·60	4	+ 2	+12	θ	59 23·898	6 53 57·32	5	− 4	− 2
n	34 26·960	5 42 7·03	3	− 3	+ 4	ι	20 0 44·920	4 44 4·10	2	−50	+20
o	34 53·585	4 17 21·35	2	−20	0	ι'	0 46·704	7 19 56·26	5	+ 4	−18
p	35 56·033	4 32 49·42	11	+ 2	− 1	κ	1 3·735	8 29 58·60	2	+20	+15
q	39 23·745	4 47 22·05	4	+ 3	+13	μ	5 8·898	9 10 13·26	5	− 6	+12
r	40 59·557	3 56 0·70	3	+14	0	C	14 31·541	6 42 27·48	11	− 4	− 3
s	41 53·357	5 30 21·80	3	−16	0	D	19 55·106	3 9 35·75	11	− 5	− 3
t	43 4·506	4 46 18·02	8	+ 2	+ 4						

Digitized by Google

The mean error for a reduced observation is found—

for the reference stars and the 6 brightest comparison stars (mag. 7·0)	±0ˢ·045	±0″·82	65 obs.
for the 13 comparison stars of mag. between 7·5 and 7·9	0·065	0·76	51, 52 obs.
for the 10 comparison stars of mag. 8·0, 8·1, 8·2	0·087	0·65	29 obs.
for the 8 comparison stars of mag. 8·3, 8·4, 8·5	0·086	0·81	31, 32 obs.

The reference stars alone would give ±0ˢ·048 ±0″·81 from 44 observations, and the general mean for the comparison stars would be ±0ˢ·073 ±0″·78 from 132 and 134 observations.

CAPE OF GOOD HOPE.

The observations were made with the Transit-Circle, and are equally distributed among three observers, Messrs. G. Maclear, R. Pett, and W. H. Cox. The method of registering the transits on a chronograph had been introduced at the Cape Observatory since the observations of the *Iris* stars were made. In all other respects the observations were made and reduced as those of 1888, and the following results were communicated by Dr. Gill :—

Observations made by G. Maclear.

1889	A		B		C		D		Mean of the deviations from mean	
	19ʰ 6ᵐ	− 8° 7′	19ʰ 14ᵐ	− 5° 37′	20ʰ 14ᵐ	− 6° 42′	20ʰ 19ᵐ	− 3° 9′	Δα	Δδ
	ˢ	″	ˢ	″	ˢ	″	ˢ	″	ˢ	″
June 6	39·40	27·80	37·37	21·25	31·64	28·62	55·10	35·29	− 0·005	+ 0·11
8	·46	27·42	·33	20·86	·61	28·47	·18	35·61	+ 12	+ 26
10	·38	27·76	·33	21·13	·50	29·09	·15	35·60	− 42	− 5
14	...	...	·43	21·69	...	...	...	...	...	...
July 11	·41	28·05	·32	20·93	..	...	...	...	...	...
17	·42	27·97	·38	20·84	·51	29·07	·08	35·99	− 35	− 12
19	·39	27·44	·43	21·18	·56	28·85	·19	36·35	+ 10	− 11
23	·38	27·44	·34	20·43	·56	28·41	·04	35·68	− 55	+ 36
25	·43	27·10	·39	20·88	·64	28·61	·24	35·74	+ 42	+ 26
27	·46	27·21	·36	20·64	·57	29·06	·13	35·78	− 2	+ 18
Aug. 1	·46	28·01	·34	21·23	·63	28·96	·18	36·58	+ 20	− 35
6	·49	27·78	·29	19·34	·60	29·92	·13	37·08	− 5	− 18
8	·42	27·02	·33	20·47	·56	28·35	·10	35·67	− 30	+ 47
10	·45	26·70	·29	20·51	·59	28·92	·19	35·60	− 2	+ 41
12	·45	27·55	·38	20·24	·53	28·59	·11	35·48	− 15	+ 38
14	·40	27·40	·35	20·21	·61	28·63	...	..	− 7	+ 39
16	·51	28·51	·36	20·63	·66	29·02	·19	36·00	+ 47	− 19
20	·49	27·36	·30	20·69	·61	29·37	·19	36·10	+ 15	− 3
22	·41	26·94	·31	20·80	·52	28·42	·08	35·64	− 52	+ 40
28	·52	28·04	·37	21·70	·61	29·20	·27	36·10	+ 60	− 41
30	·45	28·14	·31	21·09	·56	29·34	·10	36·43	− 27	− 43
Sept. 3	·50	28·48	·37	21·44	·61	29·78	·11	37·03	+ 15	− 58
5	·54	28·61	·44	20·63	·56	29·02	·16	35·63	+ 42	− 13
Mean ...	39·45	27·67	37·35	20·81	31·58	28·94	55·15	35·97	...	...

Digitized by Google

1889	α	δ (south)
a	s	″
June 6	25·22	20·93
8	·34	20·93
b		
June 10	2·53	0·26
July 23	·50	1·21
c		
July 11	6·29	6·47
17	·36	6·17
27	·34	6·27
d		
July 19	17·98	13·57
25	18·15	12·94
Sept. 3	17·95	13·48
e		
June 6	40·36	2·80
8	·35	2·54
Sept. 5	·42	...
f		
July 23	50·52	48·96
Aug. 1	·59	49·33
Sept. 5	·62	49·39
g		
June 10	37·70	23·27
Aug. 16	·74	22·56
Sept. 3	·64	24·76
h		
July 27	20·78	5·18
Aug. 14	·81	5·39
i		
June 8	41·29	2·34
July 17	·26	2·89
Aug. 20	·14	2·66
k	s	″
June 6	53·44	43·51
Aug. 12	·42	43·24
22	·35	44·33
l		
July 19	22·18	19·63
Aug. 10	·24	18·84
m		
July 23	53·98	40·14
Aug. 6	·99	40·08
28	54·07	40·59
30	53·98	41·28
n		
June 10	26·81	7·25
Aug. 8	·92	7·58
Sept. 3	·93	8·38
5	·85	7·45
o		
July 15	53·42	22·04
17	·60	21·81
Aug. 14	·74	20·00
p		
June 6	56·15	49·54
8	·22	49·32
Aug. 12	·05	50·09
16	·26	49·90
20	·06	50·25
22	·05	49·22
28	·18	49·93
q		
June 10	23·64	22·59
Aug. 1	·68	22·31
14	·76	23·50
Sept. 3	·75	23·73
r	s	″
July 27	59·60	1·22
Aug. 6	·61	0·45
Sept. 5	·60	0·74
s		
July 25	53·46	23·06
Aug. 8	·30	22·01
t		
June 6	4·49	18·77
8	·55	18·68
Aug. 12	·52	18·09
16	·63	19·11
20	·65	19·02
22	·60	17·87
28	·70	19·24
u		
July 23	43·86	25·38
Aug. 1	·99	26·12
v		
June 10	56·18	27·04
July 27	·23	27·21
Aug. 14	·24	27·37
w		
June 6	27·38	32·57
8	·30	32·64
Aug. 6	·21	32·86
8	·25	31·98
x		
July 17	22·57	0·06
19	·49	0·64
Aug. 1	·58	0·41
10	·51	0·58
Sept. 5	·52	0·55
y	s	′
June 10	25·88	54·79
July 23	·94	54·01
Aug. 12	·90	54·25
16	26·15	54·80
z		
June 6	3·64	59·15
July 25	·69	59·97
Aug. 14	·59	58·90
20	·70	59·66
α		
July 19	18·15	56·16
Aug. 1	·19	57·55
β		
June 8	38·20	16·59
Aug. 6	·11	16·88
γ		
July 27	57·35	52·52
Aug. 6	·29	52·12
8	·37	52·52
δ		
July 17	39·84	49·63
23	·80	49·22
Aug. 10	·82	49·44
ε		
June 6	17·75	48·95
10	·69	48·82
Aug. 12	·67	48·54
Sept. 5	·71	49·86
ζ		
June 8	4·83	14·80
July 25	·88	14·96
Aug. 14	·86	14·78
η	s	′
July 19	21·85	29·01
Aug. 1	·95	28·67
16	22·05	28·79
θ		
July 27	23·87	57·82
Aug. 6	·91	58·36
20	·91	58·26
ι		
July 17	44·95	2·20
Aug. 8	·96	3·72
ι′		
July 23	46·71	55·39
Aug. 10	·78	56·15
22	·71	55·89
28	·86	56·49
30	·73	56·63
κ		
July 19	3·81	60·04
Aug. 12	·67	59·56
Sept. 5	·69	59·49
λ		
July 25	45·93	33·51
Aug. 1	46·03	35·89
14	45·94	32·99
16	·99	34·39
30	·86	34·05
μ		
July 17	9·00	13·30
19	·06	12·65
27	8·94	12·87
Aug. 6	·96	13·59
8	·95	13·02

Digitized by Google

Observations made by R. Pett.

1889	A		B		C		D		Mean of the deviations from mean	
	$19^h\ 6^m$	$-8°\ 7'$	$19^h\ 14^m$	$-5°\ 37'$	$20^h\ 14^m$	$-6°\ 42'$	$20^h\ 19^m$	$-3°\ 9'$	$\Delta\alpha$	$\Delta\delta$
	s	"	s	"	s	"	s	"	s	"
June 3	39·44	27·72	37·32	20·48	31·58	28·98	55·16	35·43	+ 0·005	+ 0·05
5	·42	28·29	·38	21·27	·58	29·45	·19	37·29	+ 22	— 88
7	·45	27·44	·38	20·58	·45	28·88	·11	35·89	— 22	0
13	·45	28·40	·39	20·84	·59	29·93	...	...	+ 23	— 71
15	·53	27·80	·43	20·81	·58	28·94	·15	35·90	+ 52	— 16
17	·45	27·00	·37	19·96	·53	27·97	·05	35·39	— 20	+ 62
21	·48	27·42	·33	20·76	·52	28·93	·08	35·76	— 17	— 2
27	·46	26·84	·31	20·19	·48	27·41	·04	35·04	— 47	+ 83
29	·43	27·10	·36	20·57	·59	29·03	·14	35·85	+ 10	+ 6
July 2	·51	27·70	·44	20·36	·54	28·40	·17	35·49	+ 45	+ 19
4	·53	27·42	·43	20·55	·63	28·65	·14	35·37	+ 62	+ 20
18	·37	27·52	·28	21·05	·54	29·44	·08	35·58	— 52	— 20
20	·45	27·30	·37	20·75	·49	29·46	·12	36·50	— 12	— 30
Aug. 23	·42	27·71	·27	20·56	·58	28·65	·03	35·32	— 45	+ 14
27	·54	27·77	·36	20·78	·52	28·56	·14	35·72	+ 20	— 1
31	·38	27·58	·32	20·51	·54	28·91	·11	35·98	— 32	— 5
Sept. 6	·40	27·78	·35	20·52	·60	28·75	·18	35·56	+ 12	+ 4
Mean ...	39·45	27·58	37·36	20·62	31·55	28·84	55·12	35·75	...	...

1889	α	δ (south)	1889	α	δ (south)	1889	α	δ (south)	1889	α	δ (south)	1889	α	δ (south)
a	s	"	e	s	"	h	s	"	m	s	"	p—*cont.*	s	"
June 3	25·28	21·52	June 7	40·39	3·46	June 5	20·78	7·58	June 13	54·05	40·83	July 4	56·11	49·38
7	·27	21·76	17	·32	2·14	7	·82	6·40	July 18	53·95	40·26	Aug. 31	·05	49·02
Sept. 6	·23	21·45	27	·31	1·93	Sept. 6	·65	5·20	Aug. 27	54·15	40·90	Sept. 6	55·96	50·13
b			29	·42	2·57	i			31	·04	40·12	q		
June 5	2·44	2·45	Aug. 31	·30	3·22	June 15	41·12	3·44	n			June 7	23·78	23·36
17	·53	0·26	f			17	·23	2·67	June 3	26·92	8·18	17	·78	22·25
c			June 3	50·56	50·16	27	·17	2·32	21	·89	7·94	21	·66	22·62
June 21	6·26	6·58	13	·56	50·09	k			July 2	27·02	7·34	27	·70	22·28
27	·24	5·47	15	·59	49·43	June 29	53·49	43·88	o			r		
29	·27	5·95	July 18	·49	49·28	Aug. 27	·40	43·59	June 17	53·58	21·28	July 2	59·58	0·81
d			Aug. 23	·58	48·99	31	·47	44·21	27	·55	21·12	Aug. 23	·52	0·51
July 2	18·02	13·00	g			Sept. 6	·45	44·03	p			s		
4	·02	13·21	June 21	37·68	24·15	l			June 5	56·10	50·67	July 20	53·32	23·47
18	17·94	13·44	July 2	·76	23·68	July 20	22·19	19·51	7	·05	50·18	Aug. 27	·37	22·49
20	18·02	12·69	4	·72	23·53	Aug. 23	·16	19·33	15	·08	49·72			
Aug. 23	·02	12·68							29	·06	49·65			

Digitized by Google

1889	α	δ (south)	1889	α	δ (south)	1889	α	δ (south)	1889	α	δ (south)	1889	α	δ (south)
t	s	"	x	s	"	α	s	"	ζ	s	"	ι'	s	"
June 5	4·59	20·08	June 5	22·55	1·75	June 15	18·24	56·05	July 18	4·76	14·86	July 4	46·84	55·57
7	·55	18·79	15	·50	0·18	Aug. 27	·12	56·26	Aug. 27	·81	15·33	18	·75	55·85
15	·54	19·03	July 4	·50	0·05				Sept. 6	·83	14·75			
29	·53	19·00	20	·45	0·56	β						κ		
July 4	·57	18·45				July 18	38·02	16·59				June 29	3·65	59·63
Aug. 31	·56	18·84				20	·10	17·13	η			July 20	·75	59·37
Sept. 6	·54	19·30	y						July 30	21·85	27·99			
u						γ			Aug. 31	·87	28·36	λ		
June 17	43·87	26·02	June 7	25·94	54·48	June 5	57·37	53·76				July 4	45·90	33·18
21	·86	25·68	17	·92	54·04	Aug. 23	·36	52·89				18	·80	33·38
v			21	·88	54·67				θ			Aug. 23	·88	33·05
June 3	56·22	27·63	27	·89	55·05	δ						Sept. 6	·81	34·51
27	·20	26·73				June 7	39·79	49·82	Aug. 23	23·83	57·13			
July 2	·24	27·13				17	·82	48·86	31	·87	57·86			
w			z			21	·72	49·85	Sept. 6	·81	58·33	μ		
June 7	27·21	32·94	June 29	3·49	59·36	ϵ						June 17	8·95	12·16
21	·18	32·44	Aug. 23	·56	59·34	June 3	17·68	49·56	ι			21	·91	13·03
29	·18	32·57	31	·61	59·09	13	·65	49·80	July 2	44·92	4·42	27	·88	12·18
July 18	·23	32·67	Sept. 6	·55	60·24	15	·71	48·61	Aug. 27	·88	4·63	29	·88	13·21
												July 2	·97	12·77

Observations made by W. H. Cox.

1889	A		B		C		D		Mean of the deviations from mean	
	$19^h\ 6^m$	$-8°\ 7'$	$19^h\ 14^m$	$-5°\ 37'$	$20^h\ 14^m$	$-6°\ 42'$	$20^h\ 19^m$	$-3°\ 9'$	$\Delta\alpha$	$\Delta\delta$
	s	"	s	"	s	"	s	"	s	"
June 18	39·29	26·95	37·41	20·39	31·59	29·69	55·00	36·28	− 0·027	− 0·14
22	·40	28·27	·34	21·67	·58	28·84	54·96	36·39	− 32	− 60
26	·40	27·44	·39	20·97	·49	28·54	55·09	35·58	− 10	+ 5
28	·47	27·70	·33	20·15	·52	28·61	·03	35·14	− 15	+ 29
July 1	·45	27·62	·40	20·54	·61	28·86	·18	35·59	+ 57	+ 3
3	·50	27·30	·33	20·48	·42	29·00	·08	35·92	− 20	+ 1
5	·42	27·38	·41	20·75	·54	28·70	·13	35·80	+ 22	+ 3
22	·41	27·62	·33	21·37	·57	28·64	·10	35·59	0	− 12
24	·41	27·85	·36	20·40	·53	28·62	·07	35·34	− 10	+ 13
26	·47	27·75	·42	20·82	·54	28·73	·10	35·63	+ 30	− 4
30	·46	27·62	·30	20·83	...	...	...	...	...	...
Aug. 2	·46	28·48	·33	21·12	...	...	...	...	...	...
5	·43	27·51	·39	20·34	...	...	·11	35·72	+ 20	+ 13
7	·45	27·21	·28	20·26	·51	28·55	·08	35·46	− 22	+ 32
9	·44	27·32	·34	21·05	·52	29·39	·04	35·97	− 17	− 24
19	·38	27·09	·31	20·13	·57	28·10	·14	35·58	− 2	+ 46
21	·41	27·22	·39	20·78	·53	28·75	·10	35·55	+ 5	+ 11
Mean ...	39·43	27·55	37·36	20·71	31·54	28·79	55·08	35·70	...	...

Digitized by Google

1889	α	δ (south)	1889	α	δ (south)	1889	α	δ (south)	1889	α	δ (south)	1889	α	δ (south)
a	s	"	i	s	"	q	s	"	x	s	"	η	s	"
June 18	25·13	21·01	July 22	41·17	3·05	June 18	23·60	22·21	July 1	22·45	59·57	July 26	21·76	27·98
July 22	·14	21·63	26	·13	2·83	26	·68	22·83	3	·37	59·99	Aug. 5	·76	28·11
			Aug. 9	·08	2·30	28	·71	22·41						
b						July 5	·69	22·36	y			θ		
June 22	2·61	0·46	k						June 28	25·89	53·84			
26	·49	0·48	July 1	53·48	43·87	r			July 22	·96	53·51	Aug. 7	23·80	57·41
			5	·44	43·18	July 26	59·54	0·94				9	·78	57·66
c			Aug. 19	·36	43·37	30	·54	1·48	z					
June 28	6·26	5·30							July 24	3·48	59·14	ι		
July 3	·25	5·48	l			s			Aug. 7	·52	58·90	July 22	44·89	4·52
			July 24	22·21	19·12	Aug. 5	53·34	22·25				Aug. 19	·87	3·74
d			Aug. 7	·10	18·71	7	·31	22·48	α					
July 5	17·99	11·95							July 26	18·12	56·36			
22	·98	12·62							Aug. 5	·13	55·94	ι'		
30	·97	13·09	m			t						July 1	46·70	55·97
			June 18	53·86	39·92	July 1	4·51	18·65	β			3	·74	55·56
			22	·95	40·64	3	·42	18·50	June 22	38·04	16·59	5	·73	55·86
e			26	54·01	40·18	5	·55	18·38	26	·07	16·38			
July 24	40·34	2·54				Aug. 9	·46	18·64						
26	·25	2·82				19	·47	17·81				κ		
Aug. 2	·24	2·95	n						γ					
			July 22	26·95	7·20				June 18	57·23	52·78	July 24	3·72	59·64
			Aug. 5	·93	6·99	u			22	·24	52·60	Aug. 5	·70	59·54
f						July 24	43·85	25·41						
June 18	50·40	49·11				30	·76	26·02	δ					
22	·48	49·74	o									λ		
26	·47	48·49							July 22	39·76	49·58			
			June 28	53·53	21·17	v			Aug. 5	·74	49·53	July 5	45·92	33·15
			Aug. 7	·55	21·21							26	·81	33·23
g						July 22	56·18	27·30	ϵ					
June 28	37·64	22·66				26	·20	27·45						
July 24	·60	23·44	p						Aug. 7	17·64	48·53	μ		
			July 1	56·07	49·89				9	·68	48·86			
			3	·21	49·54	w						June 22	8·91	13·67
h			5	·01	49·15	June 18	27·08	31·67	ζ			26	·90	12·70
July 1	20·81	5·29	Aug. 9	55·93	49·04	28	·27	31·81	July 24	4·81	14·55	28	·94	12·41
3	·78	5·89	19	56·08	49·17	July 5	·18	32·23	Aug. 21	·77	13·24	July 1	·94	13·16
												3	·90	12·89

As these observations appeared to be of high precision, and as the reference stars had been observed regularly throughout, it was considered sufficient to determine day corrections from these four stars alone. The mean daily differences of their observations from the means, found in the first instance for each observer, are given

Digitized by Google

beside the observations of the reference stars in the preceding tables. Taking the means in R.A. to one more decimal place, excluding June 14, on which day star **B** only was observed, and applying the following small corrections to the means for **C** and **D** which were not observed July 11, July 30, August 2, and one of them July 13 and August 5, respectively: for Maclear, **C** $-0^s\cdot002$ $-0''\cdot01$, **D** $-0^s\cdot002$ $-0''\cdot01$; for Pett, **D** $+0^s\cdot001$ $+0''\cdot04$; for Cox, **C** $-0''\cdot04$, **D** $-0^s\cdot001$ $-0''\cdot05$, the places of the reference stars as determined by the different observers, and the simple means of the three separate determinations, become the following :—

Observer	A		B		C		D	
	s	″	s	″	s	″	s	″
Maclear ...	39·446	27·67	37·350	20·77	31·581	28·95	55·144	35·98
Pett ...	·454	27·58	·358	·62	·549	·84	·119	·79
Cox ...	·426	27·55	·356	·71	·537	·83	·080	·76
Mean ...	39·442	27·60	37·355	20·70	31·555	28·87	55·114	35·84

Applying to each observer's determination the mean of his reductions to their general means, and then taking new general means according to the number of observations, the following table was found :—

R.A. and Dec. 1889·0 by Observer	A		B		C		D		No. of Observations
	$19^h\ 6^m$	$-8°\ 7'$	$19^h\ 14^m$	$-5°\ 37'$	$20^h\ 14^m$	$-6°\ 42'$	$20^h\ 19^m$	$-3°\ 9'$	
	s	″	s	″	s	″	s	″	
Maclear ...	39·432	27·58	37·336	20·68	31·567	28·86	55·130	35·89	22, 22, 21, 21
Pett	·450·	·62·	·354·	·66·	·545·	·88·	·115·	·83·	17, 17, 17, 16
Cox	·443	·59	·373	·75	·554	·87	·097	·80	17, 17, 14, 15
Mean	39·441	27·60	37·353	20·70	31·557	28·87	55·116	35·85	56, 56, 52, 52

The reductions of the different observers' determinations to these new means become :—

Star	Maclear		Pett		Cox	
	s	″		″	s	″
A	− 0·005	+ 0·07	− 0·013	− 0·02	+ 0·015	− 0·05
B	+ 3	+ 7	− 5	− 8	− 3	+ 1
C	− 24	+ 8	+ 8	− 3	+ 20	− 4
D	− 28	+ 13	− 3	− 6	+ 36	− 9
	− 0·013·	+ 0·09	− 0·003	− 0·05	+ 0·017	− 0·04

Digitized by Google

Combining the mean reductions given in the last line (using, however, for $\Delta\delta$ the slightly different numbers $+0''\cdot08$ and $-0''\cdot04$ for the first two observers), with the daily mean deviations of the places of the reference stars before tabulated, the following day corrections were found, by which the observations of the comparison stars were reduced:—

Maclear				Pett				Cox			
1889		$\Delta\alpha$	$\Delta\delta$	1889		$\Delta\alpha$	$\Delta\delta$	1889		$\Delta\alpha$	$\Delta\delta$
		s	″			s	″			s	″
June	6	− 0·01	− 0·03	June	3	− 0·01	− 0·09	June	18	+ 0·04	+ 0·10
	8	− 0·03	− 0·18		5	− 0·03	+ 0·84		22	+ 0·05	+ 0·56
	10	+ 0·03	+ 0·13		7	+ 0·02	− 0·04		26	+ 0·03	− 0·09
July	11*	+ 0·04	+ 0·27		13	− 0·03	+ 0·67		28	+ 0·03	− 0·33
	17	+ 0·02	+ 0·20		15	− 0·06	+ 0·12	July	1	− 0·04	− 0·07
	19	− 0·02	+ 0·19		17	+ 0·02	− 0·66		3	+ 0·04	− 0·05
	23	+ 0·04	− 0·28		21	+ 0·01	− 0·02		5	− 0·01	− 0·07
	25	− 0·06	− 0·18		27	+ 0·04	− 0·87		22	+ 0·02	+ 0·08
	27	− 0·01	− 0·10		29	− 0·01	− 0·10		24	+ 0·03	− 0·17
Aug.	1	− 0·03	+ 0·43	July	2	− 0·05	− 0·23		26	− 0·01	0·00
	6	− 0·01	+ 0·26		4	− 0·07	− 0·24		30*	+ 0·03	+ 0·20
	8	+ 0·02	− 0·39		18	+ 0·05	+ 0·16	Aug.	2*	+ 0·08	+ 0·51
	10	− 0·01	− 0·33		20	+ 0·01	+ 0·26		5	0·00	− 0·17
	12	0·00	− 0·30	Aug.	23	+ 0·04	− 0·18		7	+ 0·04	− 0·36
	14	− 0·01	− 0·31		27	− 0·02	− 0·03		9	+ 0·03	+ 0·20
	16	− 0·06	+ 0·27		31	+ 0·03	+ 0·01		19	+ 0·02	− 0·50
	20	− 0·03	+ 0·11	Sept.	6	− 0·02	− 0·08		21	+ 0·01	− 0·15
	22	+ 0·04	− 0·32								
	28	− 0·07	+ 0·49								
	30	+ 0·01	+ 0·51								
Sept.	3	− 0·03	+ 0·66								
	5	− 0·06	+ 0·21								

* Two only of the reference stars being observed on these three days, the numbers as tabulated were derived, taking into account also the few observations of comparison stars made with them.

The means of the reduced observations are given in the following table:—

Obs.	α	δ (south)	No. obs.	Obs.	α	δ (south)	No. obs.	Obs.	α	δ (south)	No. obs.	Obs.	α	δ (south)	No. obs.
	a				b				c				d		
M	25ˢ·260	21″·03	2	M	2ˢ·550	0″·81	2	M	6ˢ·340	6″·15	3	M	17ˢ·990	13″·11	3
P	·240	21·65	2	P	·480	1·26	2	P	·270	6·33	3	P	18·000	13·05	5
C	·180	20·99	2	C	·590	0·23	2	C	·290	5·58	2	C	17·993	12·53	3
	e				f				g				h		
M	40·343	2·77	3, 2	M	50·560	49·11	3	M	37·673	23·18	3	M	20·785	5·49	2
P	·368	3·00	5	P	·554	49·60	5	P	·683	23·95	5	P	·740	6·15	3
C	·290	2·62	3	C	·490	48·59	3	C	·650	23·30	2	C	·795	5·65	2

Digitized by Google

Obs.	α	δ (south)	No. obs.	Obs.	α	δ (south)	No. obs.	Obs.	α	δ (south)	No. obs.	Obs.	α	δ (south)	No. obs.
	i				k				l				m		
M	41·217	2·59	3	M	53·413	43·91	3	M	22·195	19·30	2	M	53·998	40·28	4
P	·173	3·28	3	P	·448	43·98	4	P	·200	19·38	2	P	54·055	40·33	4
C	·140	2·63	3	C	·417	43·69	3	C	·190	19·18	2	C	53·980	40·06	3
	n				o				p				q		
M	26·868	7·51	4	M	53·675	20·96	2*	M	56·116	49·74	7	M	23·698	22·81	4
P	·927	7·93	3	P	·595	21·96	2	P	·039	49·75	7	P	·752	23·03	4
C	·950	7·14	2	C	·575	21·53	2	C	·066	49·46	5	C	·692	22·55	4
	r				s				t				u		
M	59·577	0·65	3	M	53·360	22·82	2	M	4·568	18·68	7	M	43·930	25·67	2
P	·545	0·86	2	P	·340	22·86	2	P	·534	19·00	7	P	·880	26·19	2
C	·557	1·13	2	C	·345	22·63	2	C	·490	18·50	5	C	·842	25·72	2
	v				w				x				y		
M	56·220	27·30	3	M	27·278	32·60	4	M	22·514	60·31	5	M	25·970	54·51	4
P	·213	27·56	3	P	·217	32·65	4	P	·460	60·39	4	P	·930	54·96	4
C	·195	27·33	2	C	·197	32·00	3	C	·410	59·84	2	C	·950	53·80	2
	z				α				β				γ		
M	3·628	59·52	4	M	18·145	56·54	2	M	38·135	16·69	2	M	57·337	52·46	2
P	·563	59·60	4	P	·140	56·11	2	P	·090	16·65	2	P	·370	52·99	2
C	·535	59·28	2	C	·120	56·23	2	C	·095	16·25	2	C	·280	52·36	2
	δ				ε				ζ				η		
M	39·837	49·57	3	M	17·695	49·04	4	M	4·823	15·07	3	M	21·913	28·53	3
P	·793	49·75	3	P	·647	49·09	2	P	·803	14·96	2	P	·880	28·04	2
C	·760	49·60	2	C	·695	48·77	2	C	·810	14·15	2	C	·755	28·13	2
	θ				ι				ι'				κ		
M	23·880	58·06	3	M	44·975	3·05	2	M	46·760	56·10	5	M	3·697	59·66	3
P	·853	57·85	3	P	·865	4·65	2	P	·785	55·75	2	P	·700	59·42	2
C	·825	57·61	2	C	·700	4·34	2	C	·720	55·86	3	C	·725	59·76	2
	λ				μ										
M	45·920	34·02	5	M	8·982	13·05	5								
P	·848	33·61	4	P	·920	13·05	5								
C	·855	33·32	2	C	·930	12·96	5								

* The observation of star o made by Maclear, July 15, had to be excluded, no other comparison stars nor a reference star being observed that evening.

Digitized by Google

It becomes apparent from this table, that though reduced with the same places for the reference stars, the results for the three observers are not entirely accordant, but are affected with differences which appear to be systematic, and whose origin may be traced to magnitude equations. Taking means, therefore, from the three determinations without regard to the different number of observations, the deviations from these means in Right Ascension are positive for Maclear, and negative for Cox in the far greater number of cases, and those in Declination markedly negative for Pett and positive for Cox, with only a few trifling exceptions. Arranging the stars in order of their magnitude, the following means of the deviations are found for four groups, the first of them comprising, beside the five brightest comparison stars, also the four reference stars which are, on the average, only a trifle brighter :—

	m	m		s	′	s	′	s	′
9 stars	5·3	to 6·8,	mean magnitude 6·04	M 0·000	0·00	P 0·000	— 0·09	C — 0·001	+ 0·10
13	7·2	„ 7·8	„ „ 7·64	+ 0·025	+ 0·18	— 0·006	— 0·28	— 0·020	+ 0·10
13	8·0	„ 8·2	„ „ 8·12	+ 0·029	— 0·13	+ 0·001	— 0·12	— 0·030	+ 0·25
7	8·3	„ 8·5	„ „ 8·43	+ 0·016	— 0·05	— 0·006	— 0·26	— 0·010	+ 0·31

Though there is little doubt that these differences are connected with the magnitudes of the stars, yet no regular progression is shown, but the numbers look as if a change of habit of observing had happened when the magnitude of the star was below seven. A constant mean reduction, therefore, was applied to the results for those of the 33 stars below this limit, which were not observed an equal number of times by all of the above observers, viz. :

for M $-0^{s}\cdot025$ $+0''\cdot01$; for P $+0^{s}\cdot003$ $+0''\cdot20$; for C $+0^{s}\cdot022$ $-0''\cdot20$

while for the brighter stars the reductions found from the first group were retained. Then general means were taken with regard to the number of observations, which are contained in the following table :—

Star	R.A. 1889·0	Dec. 1889·0	Obs.	Star	R.A. 1889·0	Dec. 1889·0	Obs.	Star	R.A. 1889·0	Dec. 1889·0	Obs.
	h m s	° ′ ″			h m s	° ′ ″			h m s	° ′ ″	
a	19 21 25·227	−5 57 21·22	6	o	19 34 53·615	−4 17 21·48	6	β	19 52 38·107	−4 39 16·53	6
b	23 2·540	6 24 0·77	6	p	35 56·072	4 32 49·65	19	γ	54 57·329	4 36 52·61	6
c	24 6·299	5 9 6·05	8	q	39 23·714	4 47 22·80	12	δ	55 39·799	6 40 49·62	8
d	25 17·996	5 54 12·89	11	r	40 59·558	3 56 0·85	7	ε	56 17·683	5 17 48·99	8
e	25 40·340	5 21 2·80	11, 10	s	41 53·348	5 30 22·77	6	ζ	57 4·810	8 0 14·78	7
f	27 50·539	4 58 49·15	11	t	43 4·533	4 46 18·73	19	η	57 21·855	4 56 28·28	7
g	28 37·672	4 41 23·53	10	u	43 43·884	4 48 25·83	6	θ	59 23·853	6 53 57·85	8
h	29 20·769	4 33 5·79	7	v	44 56·208	4 58 27·38	8	ι	20 0 44·913	4 44 4·02	6
i	30 41·177	5 1 2·83	9	w	47 27·235	4 51 32·44	11	ι'	0 46·748	7 19 55·98	10
k	30 53·428	4 32 43·85	10	x	48 22·469	5 20 0·22	11	κ	1 3·702	8 29 59·62	7
l	31 22·195	3 43 19·29	6	y	51 25·946	4 58 54·51	10	λ	2 45·876	7 20 33·71	11
m	31 54·014	4 53 40·23	11	z	52 3·579	5 28 59·46	10	μ	5 8·944	9 10 13·02	15
n	34 26·906	5 42 7·56	9	α	52 18·135	6 38 56·30	6				

Digitized by Google

The mean error of one reduced observation was found—

	for the reference stars :			for the comparison stars :		
	s	″		s	″	
for Maclear :	±0·040	±0·41	from 85 observations	±0·054	±0·48	from 127 observations
Pett	0·041	0·28	,, 67 ,,	0·048	0·40	,, 125 ,,
Cox	0·051	0·32	,, 63 ,,	0·053	0·33	,, 95 ,,

CINCINNATI.

Professor Porter has published the mean results of his observations of the *Victoria* stars with the 5-inch Fauth Transit-Circle in No. 2941 of the *Ast. Nach.* The individual results for 1889·0 communicated by Professor Porter to Dr. Gill are given in the following table:—

1889		A		B		C		D		Mean Deviation		Mean daily dev. from N_3 within system	
		19h 6m	−8° 7′	19h 14m	−5° 37′	20h 14m	−6° 42′	20h 19m	−3° 9′	$\Delta\alpha$	$\Delta\delta$	$\Delta\alpha$	$\Delta\delta$
		s	″	s	″	s	″	s	″	s	″	s	″
July	11	39·49	27·1	37·34	20·0	31·69	28·8	55·05	37·7	−0·005	+0·1	−0·040	+0·32
	13	·45	27·6	·41	21·8	·56	29·0	·13	37·0	−0·01	−0·35	−0·007	−0·51
	15	·35	27·7	·19	20·6	·43	29·8	·01	36·5	−0·15	−0·15	−0·103	−0·31
	22	·50	26·4	·49	20·0	·53	28·4	·20	36·3	+0·03	+0·7	+0·014	+0·23
	26	·52	28·7	·46	21·3	·48	28·4	·17	35·0	+0·01	+0·15	...	...
	27	·52	27·8	·40	21·1	·68	29·7	·09	35·6	+0·025	−0·05	−0·003	−0·29
	30	·35	26·2	·35	20·9	·50	29·0	·15	35·2	−0·06	+0·6	...	...
	31	·48	27·9	·30	20·7	·66	29·7	·06	35·2	−0·02	+0·1	0·000	+0·20
Aug.	5	·44	27·6	·44	20·5	·76	29·3	·31	35·8	+0·09	+0·2	...	...
	6	·51	28·5	·43	21·8	·52	29·9	·26	37·7	+0·03	−1·0	...	...
	10	·44	28·7	·31	21·8	·52	28·8	·28	35·3	−0·01	−0·15	−0·015	+0·09
	16	·58	28·4	·44	21·0	·61	30·1	...	...	+0·07	−0·5	...	..
Mean	...	39·47	27·7	37·38	21·0	31·58	29·2	55·16	36·1	...	...	...	...

1889	α	δ (south)	1889	α	δ (south)	1889	α	δ (south)	1889	α	δ (south)	1889	α	δ (south)
a			b			c			d			e		
	s	″		s	″		s	″		s	″		s	″
July 11	25·25	20·1	July 13	2·50	2·1	July 15	6·21	7·1	July 11	17·81	12·7	July 13	40·43	4·3
15	·09	21·1	22	·52	1·3	27	·23	6·8	26	·93	15·3	22	·50	3·6
30	·28	22·7	31	·64	0·9	Aug. 5	·41	4·5	30	·97	13·8	31	·33	4·3
						10	·30	5·1	Aug. 6	·90	14·5	Aug. 16	·58	1·5
									19	·91	13·0	20	·29	3·8

Digitized by Google

1889	α	δ (south)	1889	α	δ (south)	1889	α	δ (south)	1889	α	δ (south)	1889	α	δ (south)
f	s	"	n	s	"	t	s	"	z	s	"	η	s	"
July 11	50·63	48·8	July 15	26·81	8·2	July 11	4·53	17·6	July 13	3·53	60·5	July 15	21·75	27·7
15	·43	49·3	Aug. 10	·82	7·3	13	·48	19·3	27	·59	59·6	26	·82	27·2
27	·66	49·8	16	27·05	6·9	26	·49	18·5	31	·76	59·5	30	·79	27·5
Aug. 5	·55	47·7				30	·46	19·1	Aug. 10	·59	59·2			
6	·62	50·6	o			31	·56	18·4				θ		
						Aug. 6	·50	19·9	α					
g			July 22	53·54	21·9	19	·58	18·2	July 22	18·19	57·0	July 11	23·82	57·9
July 13	37·60	25·3	Aug. 5	·58	20·9				Aug. 16	·38	55·5	22	·85	58·2
22	·68	23·1	20	·44	22·4	u			19	·11	57·1	31	·77	57·4
30	·71	25·6				July 26	43·73	24·8						
			p			27	·83	25·8	β			ι		
h			July 11	55·88	50·0	Aug. 5	44·06	24·4	July 26	37·97	16·8			
July 26	20·66	7·5	13	56·13	52·0	19	43·86	24·8	Aug. 5	38·32	15·9	July 13	44·93	3·9
31	·76	4·8	26	·11	50·9				20	·19	17·1	27	·88	5·7
Aug. 19	·83	6·5	30	·17	49·9	v						30	45·07	5·5
			31	55·99	50·3	July 22	56·29	26·9	γ					
i			Aug. 6	56·09	50·8	Aug. 10	·37	27·3				κ		
July 11	41·21	1·9	19	55·97	50·5	16	·38	26·3	July 11	57·36	54·3			
27	·26	3·7							15	·31	52·9	July 15	3·75	60·0
Aug. 16	·26	2·4	q			w			30	·35	51·6	26	·68	60·0
			July 11	23·70	22·5	July 15	27·12	33·1				Aug. 5	·89	58·3
k			13	·65	23·9	26	·35	33·8	δ					
July 15	53·43	44·6	30	·68	22·3	30	·20	32·7	July 13	39·76	50·4	λ		
Aug. 5	·49	43·1	31	·70	22·3	Aug. 6	·33	33·0	26	·74	49·8			
17	·59	43·1							31	·73	47·6	July 11	45·83	32·9
			r			x			Aug. 10	·84	51·0	13	·94	31·7
l			July 15	59·49	61·9	July 13	22·45	60·6				22	·88	32·7
July 22	22·19	19·6	27	·47	61·8	22	·49	60·1	ϵ			30	·85	33·9
Aug. 6	·42	20·6	Aug. 5	·60	59·7	31	·57	61·3	July 22	17·65	49·1	31	·86	33·0
20	·25	19·8				Aug. 5	·46	58·0	Aug. 5	·73	...			
			s						6	·72	49·2	μ		
m			July 22	53·46	23·2	y			19	·75	47·9			
July 13	54·10	41·5	Aug. 10	·35	23·1	July 11	25·81	53·1				July 11	8·92	13·3
26	·01	42·3	16	·43	21·9	15	·78	55·2	ζ			13	9·03	12·8
30	·17	41·3				30	26·09	53·5	July 11	4·74	15·5	15	8·83	15·2
Aug. 10	53·89	40·2				Aug. 6	25·84	53·5	27	·81	14·9	30	9·01	13·7
									Aug. 16	·86	15·2	31	8·99	13·5

For the twelve days on which the reference stars were observed, the mean daily deviations determined from them, as given in the preceding table, were subtracted from the observations of the comparison stars observed on the same days, and with the additional means of places thus obtained the day corrections were determined for two of the days without reference stars, viz.: August 19 $-0^{s}\cdot01$ $-0''\cdot2$ from seven stars, August 20 $+0^{s}\cdot035$ $+0''\cdot4$ from four stars. An isolated observation August 17 was used without correction.

Digitized by Google

The position of the instrument was Circle W. till July 29, and afterwards Circle E. As there is an equal number of observations of the reference stars made in the two positions, any systematic reduction to the means, half E.&W., will be comprised in the day corrections as determined ; no distinction, therefore, was made between the observations of the comparison stars, but means were taken of the reduced observations which are contained in the following table :—

Star	R.A. 1889·0	Dec. 1889·0	Obs.	Star	R.A. 1889·0	Dec. 1889·0	Obs.	Star	R.A. 1889·0	Dec. 1889·0	Obs.
	h m s	° ′ ″			h m s	° ′ ″			h m s	° ′ ″	
A	19 6 39·469	−8 7 27·69	12	n	19 34 26·923	−5 42 7·20	3	β	19 52 38·138	−4 39 16·58	3
B	14 37·380	5 37 20·93	12	o	34 53·492	4 17 21·87	3	γ	54 57·412	4 36 53·12	3
a	21 25·278	5 57 21·48	3	p	35 56·055	4 32 50·60	7	δ	55 39·775	6 40 49·64	4
b	23 2·553	6 24 1·58	3	q	39 23·706	4 47 22·86	4	ε	56 17·672	5 17 48·70	4, 3
c	24 6·299	5 9 5·84	4	r	40 59·532	3 56 1·13	3	ζ	57 4·773	8 0 15·05	3
d	25 17·907	5 54 13·87	5	s	41 53·383	5 30 22·75	3	η	57 21·853	4 56 27·67	3
e	25 40·419	5 21 3·41	5	t	43 4·521	4 46 18·69	7	θ	59 23·812	6 53 58·13	3
f	27 50·580	4 58 49·06	5	u	43 43·836	4 48 25·07	4	ι	20 0 44·975	4 44 5·10	3
g	28 37·677	4 41 24·98	3	v	44 56·317	4 58 26·85	3	κ	1 3·790	8 29 59·50	3
h	29 20·750	4 33 6·34	3	w	47 27·292	4 51 33·05	4	λ	2 45·885	7 20 33·07	5
i	30 41·213	5 1 2·52	3	x	48 22·470	5 20 0·16	4	μ	5 9·005	9 10 13·76	5
k	30 53·523	4 32 43·62	3	y	51 25·926	4 58 53·71	4	C	14 31·578	6 42 29·21	12
l	31 22·278	3 43 19·77	3	z	52 3·621	5 28 59·59	4	D	19 55·162	3 9 36·13	11
m	31 54·060	4 53 41·39	4	α	52 18·190	6 38 56·67	3				

The mean error of one observation is found to be—

from 47 observations of reference stars :	in R.A. ± 0ˢ·075 ;	in Dec. ± 0″·71
„ 139 and 138 observations of comparison stars	„ 0ˢ·086 ;	„ 0″·99

These are very large values, especially as the Right Ascensions were observed by chronograph. Mr. Porter explains this from the fact that he had been obliged to utilize a few hazy evenings when the seeing was difficult. The day corrections made use of appearing subject to the large mean error ±0ˢ·04 and ±0″·4, might be considerably improved by comparing all the observed stars with normal places, as has been done afterwards for those days on which Victoria had been observed. The mean daily deviations thus found are given above with the table of observations of the reference stars. No sensible difference in the general means, however, would be produced by the introduction of the results of a further approximation of the Cincinnati means.

CORDOBA.

Dr. Thome has communicated apparent star places from observations made from July 15 to October 3, 1889, by Mr. Updegraff with the 4-inch Repsold Meridian-Circle, from which the following mean places 1889·0 were derived by Dr. J. Lamp :—

Digitized by Google

1889	α	δ (south)
a	s	′
July 17	25·34	21·08
19	·24	21·08
20	·36	20·79
b		
July 15	2·62	59·60
Aug. 30	·56	59·16
31	·68	59·54
c		
Sept. 2	6·39	5·46
3	·35	4·92
4	·41	5·30
d		
Sept. 6	18·02	12·31
11*	·07	10·20
13	·09	11·78
e		
Sept. 17	40·29	2·24
19	·36	1·87
26	·39	2·06
27	·33	1·56
f		
Sept. 3	50·62	48·97
4	·56	48·45
6	·62	48·37
11	·55	48·25
g		
Sept. 13	37·73	22·72
17	·68	23·27
19	·72	23·59
h		
Sept. 26	20·87	5·14
27	·79	5·51
i		
Sept. 3	41·27	1·70
4	·22	1·72
6	·25	2·64
k		
Sept. 11	53·46	42·22
13	·47	41·89
17	·41	42·82
l		
Sept. 19	22·27[	14·57]
26	·20	19·00
27	·19	18·19
m		
Aug. 29	54·07	40·19
30	·06	39·52
31	·16	39·27
Sept. 2	·10	39·37
n		
Aug. 22	27·00	7·05
24	26·95	5·96
27	·89	7·83
28	27·01	7·79
o		
Aug. 3	53·57	21·12
5	·62	20·96
18	·58	21·83
19	·65	20·83
p		
July 17	56·11	49·55
18	·12	49·64
20	·16	48·28
22	·19	47·76
30	·16	47·50
Aug. 1	·11	48·58
2	·14	48·87
q		
July 17	23·80	22·06
18	·85	21·36
25	·75	22·49
29	·79	23·09
Aug. 5	·78	21·69
r		
Sept. 4	59·61	58·91
11	·57	59·46
13	·58	60·86
s		
July 22	53·45	21·31
25	·34	22·62
29	·36	22·40
t		
Aug. 3	4·61	17·66
27	·59	17·70
28	·60	18·24
29	·55	18·92
30	·58	17·58
31	·63	18·24
Sept. 3	·58	18·35
u		
July 30	43·95	25·00
Aug. 1	·88	25·66
2	·83	25·83
v		
July 19	56·28	26·07
20	·16	26·70
22	·17	25·94
25	·16	26·73
w		
Sept. 13	27·30	30·87
17	·24	31·64
19	·26	31·88
26	·23	31·63
x		
Aug. 19	22·57	58·47
22	·53	60·52
24	·47	59·51
Sept. 27	[·06	51·11]
y		
Sept. 4	26·02	53·97
6	25·95	53·60
11	·96	52·22
13	·95	55·19
17	·95	53·26
z		
Aug. 29	3·60	59·44
30	·63	58·27
31	·72	59·10
Sept. 2	·68	57·76
3	·69	58·38
α		
Aug. 1	18·36	55·05
24	·23	55·76
27	·17	55·79
28	·29	56·24
β		
July 18	38·12	16·06
19	·15	13·89
20	·10	15·89
25	·07	16·95
γ		
Sept. 3	57·37	50·46
4	·35	51·30
6	·42	52·86
δ		
Sept. 11	39·86	47·99
13	·83	48·80
17	·81	48·41
ε		
Sept. 19	17·72	48·79
26	·67	48·08
27	·70	48·46
ζ		
Sept. 28	4·87	14·71
Oct. 2	·85	14·35
3	·88	13·81
η		
Sept. 3	21·93	27·27
4	·90	26·70
6	·82	27·69
θ		
Sept. 11	23·96	56·12
13	·88	56·90
17	·85	56·94
ι		
Sept. 3	44·95	2·33
4	·99	2·69
6	·93	3·59
ι′		
Aug. 28	46·79	55·37
29	·73	55·86
30	·78	54·06
31	·81	55·33
Sept. 2	·89	54·87
κ		
Aug. 18	3·69	59·79
19	·82	58·07
22	·80	58·62
24	·70	59·08
27	·82	58·74
μ		
Aug. 19	9·02	12·26
22	·01	11·84
24	8·97	12·21
27	·98	13·35
28	·99	13·58

* Through clouds.

Digitized by Google

No observations of the reference stars were made, the request for them having apparently failed to reach Cordoba. Means, therefore, were taken at once from the results tabulated above, and the following day corrections, $\Delta\alpha$ and $\Delta\delta$, determined from them. In the column marked "later values" are given the values of $\Delta\alpha$ and $\Delta\delta$ which were found in a further approximation within the observers' system and used in a first reduction of the meridian observations of the planet. These "later values" were formed from the observations of the comparison stars for those evenings when at least three of them had been observed with the planet; for those nights on which only two of the comparison stars were observed they are two-thirds of the correction given by the observations of the comparison stars, and for July 15 when only one comparison star was observed, they are one-third of the correction in question.

1889	Day Correction found in first approx.			Later Values		1889	Day Correction found in first approx.			Later Values	
	$\Delta\alpha$	$\Delta\delta$	No. Stars	$\Delta\alpha$	$\Delta\delta$		$\Delta\alpha$	$\Delta\delta$	No. Stars	$\Delta\alpha$	$\Delta\delta$
	s	"		s	"		s	"		s	"
July 15	0·00	+ 0·2	1	— 0·007	— 0·20	Aug. 28	— 0·02	+ 0·50	5	— 0·033	+ 0·76
17	0·00	+ 0·30	3	— 27	+ 0·45	29	+ 0·05	+ 0·75	4	+ 20	+ 0·80
18	— 0·02	+ 0·20	3	— 23	+ 0·11	30	+ 0·03	— 0·44	5		
19	— 0·02	— 0·70	3	— 8	— 0·62	31	— 0·05	+ 0·12	5		
20	— 0·01	— 0·02	4	— 4	— 0·05	Sept. 2	— 0·03	— 0·25	4		
22	— 0·03	— 0·70	3	— 15	— 0·92	3	0·00	— 0·20	7		
25	+ 0·04	+ 0·60	4	+ 61	+ 0·55	4	— 0·01	— 0·21	7		
29	+ 0·01	+ 0·62	2	+ 7	+ 0·58	6	+ 0·02	+ 0·56	6		
30	— 0·04	— 0·80	2	— 23	— 0·45	11	— 0·01	— 0·56	6		
Aug 1	— 0·02	— 0·17	3	— 30	+ 0·04	13	— 0·01	+ 0·30	8		
2	+ 0·03	+ 0·30	2	+ 23	+ 0·29	17	+ 0·03	+ 0·03	7		
3	0·00	— 0·25	2	— 3	+ 0·08	19	— 0·02	+ 0·26	5, 4		
5	0·00	— 0·32	2	— 3	+ 0·01	26	0·00	0·00	5		
18	+ 0·05	+ 0·77	2	+ 43	+ 0·74	27	+ 0·02	— 0·15	4		
19	— 0·04	— 0·64	4	— 32	— 0·35	28	0·00	+ 0·4	1		
22	— 0·02	— 0·02	4	— 29	+ 0·19	Oct. 2	— 0·02	+ 0·1	1		
24	+ 0·04	— 0·34	5	+ 25	— 0·01	3	+ 0·01	— 0·5	1		
27	+ 0·02	+ 0·20	5	+ 15	+ 0·48						

The Declination of star 1 obtained September 19, and the quite discordant observation recorded for x on September 27, which possibly belongs to some other star (the magnitude noted is also quite different), were excluded from the means and from the determinations of the day corrections.

The mean daily deviations are generally small in this series, the average

Digitized by Google

values being only $0^s{\cdot}022$ and $0''{\cdot}36$. No reductions, of course, were applied to the star positions of the first and the three last days; all the other values tabulated for $\Delta\alpha$ and $\Delta\delta$ were applied, and the following means taken from the reduced results:—

Star	R.A. 1889·0	Dec. 1889·0	Obs.	II − I	Star	R.A. 1889·0	Dec. 1889·0	Obs.	II − I
	h m s	° ′ ″				h m s	° ′ ″		
a	19 21 25·303	− 5 57 21·12	3	−10 −13	u	19 43 43·878	− 4 48 25·72	3	− 9 −22
b	23 2·613	6 23 59·54	3	− 7 −11	v	44 56·187	4 58 26·57	4	− 5 −21
c	24 6·370	5 9 5·45	3	−13 −22	w	47 27·257	4 51 31·37	4	0 +14
d	25 18·060	5 54 11·36	3	0 + 7	x	48 22·515	5 19 59·83	3	− 8 −33
e	25 40·350	5 21 1·90	4	+ 7 + 3	y	51 25·970	4 58 53·62	5	+ 4 + 3
f	27 50·587	4 58 48·62	4	0 −11	z	52 3·664	5 28 58·59	5	0 0
g	28 37·710	4 41 22·98	3	0 +21	α	52 18·267	6 38 55·66	4	+ 5 + 5
h	29 20·840	4 33 5·40	2	+10 − 8	β	52 38·107	4 39 15·68	4	− 3 + 2
i	30 41·250	5 1 1·97	3	+ 3 + 5	γ	54 57·383	4 36 51·49	3	+ 3 + 3
k	30 53·450	4 32 42·38	3	+ 3 − 7	δ	55 39·837	6 40 48·47	3	+ 4 − 7
l	31 22·220	3 43 18·67	3, 2	0 − 8	ε	56 17·697	5 17 48·41	3	0 + 3
m	31 54·097	4 53 39·54	4	0 + 5	ζ	57 4·867	8 0 14·29	3	0 0
n	34 26·967	5 42 7·07	4	+ 5 + 9	η	57 21·887	4 56 27·17	3	+ 4 + 5
o	34 53·607	4 17 21·30	4	+ 2 −11	θ	59 23·900	6 53 56·72	3	+ 3 − 7
p	35 56·129	4 32 48·72	7	−12 −12	ι	20 0 44·960	4 44 2·82	3	+ 3 + 5
q	39 23·800	4 47 21·86	5	+ 6 +28	ι′	0 46·796	7 19 54·96	5	− 4 +14
r	40 59·578	3 55 59·93	3	− 9 −19	κ	1 3·775	8 29 58·87	5	+ 9 − 1
s	41 53·390	5 30 21·94	3	+ 7 +17	μ	5 8·995	9 10 12·71	5	+ 1 − 6
t	43 4·596	4 46 18·00	7	+ 5 +10					

Although the determination of the day corrections was generally rather poor for most of the evenings, yet the star-places resulting from the second approximation differ very slightly from those derived from the first. The differences (expressed in $0^s{\cdot}001$ in Right Ascension and in $0''{\cdot}01$ in Declination) are given in the column II − I of the preceding table.

The sum of the squares of the differences between the separate reduced observations and their mean is 0·1129 for 139 observations of Right Ascension and 21·84 for 138 observations of Declination; hence, the number of means taken from these observations being 37 for stars and 31 for day corrections, the mean error of an observation is: in R.A. $\pm 0^s{\cdot}040$; in Dec. $\pm 0''{\cdot}56$. These numbers are very satisfactory, bearing in mind that at Cordoba observations are made with a power of only 66. The use of so low a power offered advantages in the first work to which the Cordoba Meridian-Circle was applied (viz., zone observations of unknown stars), but cannot be recommended in other meridian work, and possibly explains the very large systematic error by which the Right Ascensions of this series, as will appear afterwards, are affected.

Digitized by Google

DUBLIN.

The results of observations made by Mr. A. A. Rambaut with the Martins Transit-Circle, and referred to the *Berliner Jahrbuch* system for both co-ordinates, are printed in detail in the *Monthly Notices*, January 1891. From a comparison of the individual results with their means, the following day corrections were determined :—

		s	′		s	′
1889	June 10	+0·064	+0·39	7 stars.	Later values —	—
	July 3	−0·047	−0·32		−0·058	−0·16
	29	−0·007	−0·27		−0·009	−0·32
	Aug. 17	−0·019	+0·57		−0·012	+0·65
	20	+0·036	−0·25		+0·052	−0·37

Applying these corrections, which do not differ much from the "later values" subsequently derived for a first reduction of the observations of the planet, the mean values of the star places become :—

Star	R.A. 1889·0	Dec. 1889·0	Obs.	II − I		Star	R.A. 1889·0	Dec. 1889·0	Obs.	II − I	
	h m s	° ′ ″					h m s	° ′ ″			
A	19 6 39·411	− 8 7 28·02	4	− 9	− 7	x	19 48 22·492	− 5 19 59·48	2	−33	+12
B	14 37·331	5 37 21·04	5	+ 5	+ 2	y	51 25·958	4 58 52·89	2	+28	+ 6
a	21 25·268	5 57 21·16	2	+ 8	+ 4	β	52 38·136	4 39 16·45	1		
b	23 2·703	6 24 0·47	1			γ	54 57·291	4 36 53·13	1		
f	27 50·517	4 58 49·43	3	− 4	− 6	ζ	57 4·904	8 0 13·31	1		
i	30 41·166	5 1 2·45	1			η	57 21·790	4 56 27·96	2	+15	−26
m	31 53·981	4 53 40·03	1			ι	20 0 44·851	4 44 3·83	1		
p	35 56·058	4 32 49·76	3	+18	− 6	ι′	0 46·823	7 19 56·52	1		
q	39 23·697	4 47 22·75	2	−13	+15	μ	5 8·926	9 10 12·99	4	− 9	− 7
r	40 59·426	3 56 0·25	1			C	14 31·541	6 42 29·06	5	+ 5	+ 2
t	43 4·490	4 46 18·91	4	− 2	+ 9	D	19 55·023	3 9 35·04	4	− 9	− 6
w	47 27·196	4 51 31·65	1								

The mean error of a reduced observation is, from all of the 42 observations, $\pm 0^s\cdot061$ $\pm 0''\cdot75$. The bright stars however seem to be more and the small stars less accurately observed, for the mean error from 18 observations of the reference stars amounts only to $\pm 0^s\cdot050$ $\pm 0''\cdot70$, and from 24 observations of the comparison stars, which were observed more than once, to $\pm 0^s\cdot070$ $\pm 0''\cdot79$.

Digitized by Google

GREENWICH.

The observations are found in the annual volume for 1889. The places, reduced to the beginning of the year, were previously communicated in MS. by the Astronomer Royal, and treated in the same manner as the other series. As on many days only two of the reference stars were observed, day corrections were determined at once from all stars without distinction. Some few results of reflexion observations made of stars **A** and **B** were rejected, as also the Right Ascension of **C**, observed July 29, when the star had been very faint, and the wires discordant; and the Declination of δ Sept. 6 was provisionally excluded. The numbers found for $\Delta\alpha$ and $\Delta\delta$, as found and used for the reduction of the star places, are tabulated below. The later values given with them for sake of comparison are those parts of the corrections subsequently determined for the days with observations of the planet which should reduce these to the mean Greenwich system.

1889	$\Delta\alpha$	$\Delta\delta$	No. Stars	Obs.	Later Values		1889	$\Delta\alpha$	$\Delta\delta$	No. Stars	Obs.	Later Values	
	s	″			s	″		s	″			s	″
July 5	− 0·02	− 0·90	2	H	−0·005	− 0·42	Aug. 29	− 0·04	+ 0·30	11	AP	−0·041	+0·41
6	+ 0·01	− 1·10	3	L	...	...	30	− 0·01	+ 0·87	7,6	R		
10	− 0·07	− 0·20	3	L	...	...	31	− 0·04	− 1·42	2,3	WR		
13	− 0·01·	− 0·85	2	H	...	...	Sept. 3	+ 0·00·	− 0·55	2	L		
15	− 0·04	+ 0·79	7	T	− 33	+ 1·05	6	− 0·04	− 0·89	8,6	AC		
18	− 0·02	− 0·22	11	JP	− 39	− 0·23	9	− 0·03	− 0·70	3,2	HT		
19	− 0·01	− 0·61	7	WR	+ 14	− 0·98	10	0·00	+ 0·10	10	WR		
23	0·00	− 0·64	8	T	− 4	− 0·76	11	+ 0·03	− 0·22	5,6	L		
25	+ 0·08	− 0·22	9	H	+ 81	− 0·30	12	0·00	+ 0·95	3	AD		
29	− 0·02	+ 1·15	3,4	H	+ 3	+ 1·29	13	− 0·01	+ 0·12	6,5	AC		
30	+ 0·03	+ 0·59	12	AD	+ 30	+ 0·67	14	− 0·01	− 0·91	7	AP		
31	− 0·04	+ 0·71	11	T	− 61	+ 0·71	16	+ 0·02	− 0·02	6	AC		
Aug. 5	+ 0·03	− 0·46	5	WR	...	...	17	+ 0·03	+ 0·64	5	RW		
6	0·00	− 0·69	7	H	− 16	− 0·90	18	− 0·03	+ 0·47	6	JP		
7	+ 0·03	+ 0·16	7	JP	+ 17	− 0·10	21	− 0·02	+ 0·31	4	SD		
12	+ 0·02·	+ 0·75	2	T	...	...	23	− 0·14·	+ 0·40	2	H		
15	− 0·02	− 0·24	12	JP	− 34	− 0·32	25	+ 0·02	+ 0·88	4	AC		
17	+ 0·07	− 0·37	11	WR	+ 77	− 0·25	26	+ 0·03	− 0·27	3	R		
23	− 0·04	− 0·25	4,3	SD	...	...	Oct. 3	− 0·02	+ 0·50	5	T		
26	+ 0·01	− 0·05	6,5	L	...	...	5	+ 0·02	+ 0·17	3	H		
28	0·00	+ 0·11	9,11	T	0	+ 0·17	7	+ 0·04	+ 0·46	4	AP		

Some isolated observations, made respectively on August 16 by AC (α), September 18 by AD, and October 12 by L (both these of β) were used as computed at Greenwich, though comparatively many instances of large day corrections are noticed in this series. Probably they have their origin partly in

Digitized by Google

personalities. For the four regular observers AD, T, H, L (Messrs. Downing, Thackeray, Hollis and Lewis respectively) the means of the corrections are—

for AD	+ 0^{s}·015	+ 0″·77	from 2 days
T	− 0·012	+ 0·37	„ 6 „
L	+ 0·025	− 0·42	„ 5 „
H	− 0·014	− 0·13	„ 7 „

with a marked preponderance of sign in the indicated direction. But as no less than 13 different observers took part in the observations, the material is not sufficient for a closer investigation into this matter.

The following Right Ascensions were given half weight, as had been done at Greenwich, because three wires only, or less, had been observed, viz., **A**, August 6, **e**, August 30, **r**, July 30, **s**, July 23. The same was done for the rather discordant Declination of **b** from the observation of July 19, which was recorded as rough; the Declination of δ, Sept. 6, though differing 3″·4 from the mean of the three others, was ultimately retained, because no uncertainty was noted, and it appeared that the error must be distributed among the observations. The following are the mean results thus found, and their differences II − I from the direct Greenwich means.

Star	R.A. 1889·0	Dec. 1889·0	No. obs.	II − I	Star	R.A. 1889·0	Dec. 1889·0	No. obs.	II − I
	h m s	° ′ ″				h m s	° ′ ″		
A	19 6 39·427	− 8 7 28·38	32	+ 1 + 7	u	19 43 43·933	− 4 48 26·30	3	+ 3 −25
B	14 37·316	5 37 21·63	35, 36	+ 3 + 6	v	44 56·207	4 58 28·23	3	+ 4 −10
a	21 25·207	5 57 22·00	4	+ 4 −18	w	47 27·182	4 51 34·02	4	−21 +22
b	23 2·520	6 24 1·87	3, 5	−55* −22	x	48 22·460	5 20 0·77	4	+ 5 + 1
c	24 6·327	5 9 6·65	4	+ 4 − 6	y	51 25·917	4 58 53·90	4	+12 −42
d	25 17·942	5 54 14·02	5	−10 +14	z	52 3·527	5 23 59·98	4	−13 +16
e	25 40·313	5 21 3·46	6, 5	+ 1 + 5	α	52 18·100	6 38 56·21	3	+33 + 8
f	27 50·494	4 58 50·39	5	− 4 +16	β	52 38·070	4 39 16·73	3	+20 −33
g	28 37·707	4 41 25·37	4	+ 9 − 3	γ	54 57·342	4 36 52·80	4	+ 4 − 7
h	29 20·777	4 33 6·72	3	+ 4 +12	δ	55 39·813	6 49 50·06	3, 4	+23 −12
i	30 41·127	5 1 4·01	3	−13 +19	ε	56 17·693	5 17 49·26	3, 4	−20 −11
k	30 53·383	4 32 44·16	3	−20 −34	ζ	57 4·873	8 0 15·35	3	−14 −33
l	31 22·190	3 43 19·90	3	+ 7 −34	η	57 21·725	4 59 29·00	4, 3	+12 −48
m	31 53·992	4 53 40·65	4	+ 4 +11	θ	59 23·885	6 53 57·55	4	−20 − 8
n	34 26·930	5 42 7·38	2, 3	+10 +23	ι	20 0 44·862	4 44 5·19	4	+17 − 2
o	34 53·547	4 17 21·77	3	+24 +10	ι′	0 46·716	7 19 56·82	5, 6	−10 −11
p	35 56·033	4 32 50·25	7	− 1 + 4	κ	1 3·730	8 30 0·06	3	0 −19
q	39 23·752	4 47 23·84	5, 4	− 2 −18	μ	5 9·018	9 10 13·23	5	+ 6 +12
r	40 59·564	3 56 1·56	3	−26 +56	C	14 31·521	6 42 29·79	18, 16	− 3 − 2
s	41 53·336	5 30 23·93	3	+16 − 5	D	19 55·082	3 9 36·73	19	− 4 + 3
t	43 4·489	4 46 19·27	9, 8	− 2 + 7					

* The R.A. of July 29, which differs +0^{s}·21 from the other three, was included in the Greenwich mean.

The mean error of a reduced observation is found—

for the reference stars: in R.A. ±0^{s}·044 (104 obs.); in Dec. ±0″·62 (103 obs.).
„ comparison „ „ 0·061 (145 obs.) „ 0·82 (148 obs.).

Digitized by Google

HAMBURG.

The following observations were made by Dr. W. Luther with the $4\frac{1}{4}$-inch Repsold Meridian-Circle. The places depend upon stars from the *Berliner Jahrbuch*. The transits were observed by eye and ear. The position of the instrument is designated E. in June and July and W. in August and September.

1889		A		B		C		D	
		$19^h\ 6^m$	$-8°\ 7'$	$19^h\ 14^m$	$-5°\ 37'$	$20^h\ 14^m$	$-6°\ 42'$	$20^h\ 19^m$	$-3°\ 9'$
		s	″	s	″	s	″	s	″
June	17	...	...	37·22	21·8	31·73	29·3	...	...
	19	39·45	...	·47	22·6	·49	30·2	...	...
	21	·36	26·9	·33	20·3	...	...	55·16	...
	22	·54	28·6	·38	20·3	...	...	...	...
	23	·31	27·7	·31	21·0	...	...	54·88	35·0
	24	·44	27·0	·26	20·1	...	...	55·00	37·8
	25	·40	...	·16	...	·53	29·7	...	...
	26	·55	29·0	·33	20·6	...	...	·01	37·2
	28	...	...	...	...	...	...	54·97	35·4
July	26	...	...	...	...	·50	28·6	...	...
	27	·34	27·2	·30	20·6	·68	28·8	...	...
	31	·41	27·3	·25	21·5	...	...	55·13	36·5
Aug.	27	...	...	·49	23·7	·47	30·3	...	...
	29	...	...	·33	20·5	...	...	·25	37·9
	30	·54	27·0	·53	20·5	·60	30·3	...	...
	31	·45	29·7	·37	23·4	...	...	·11	37·1
Sept.	1	·52	29·6	·33	...	...	...	...	...
	4	...	...	·37	20·7	...	...	·01	36·9
	5	·54	28·9	·38	22·4	...	...	·10	35·2
	6	·58	28·9	·37	20·4	·59	30·6	...	...
	12	...	...	·25	21·1	·49	28·7	...	...
	15	·54	...	·20	22·7	...	...	·15	...

1889	α	δ (south)	1889	α	δ (south)	1889	α	δ (south)	1889	α	δ (south)	1889	α	δ (south)
a	s	″	**c**	s	″	**e**	s	″	**g**	s	″	**k**	s	″
June 22	25·33	19·4	June 26	6·21	9·0	June 24	40·31	2·5	June 22	37·75	20·6	June 21	53·46	41·3
23	·18	21·7	Aug. 31	·24	7·0	July 27	·39	2·5	Sept. 6	·68	24·6	Sept. 4	·72	44·4
Sept 1	·30	21·7				Sept. 12	·04	2·5				15	·30	46·3
6	·35	22·2				**f**			**h**					
			d			June 17	50·64	48·9	June 23	20·60	7·2	**l**		
b						19	·42	48·8	**i**			June 26	22·00	19·5
June 21	2·50	63·0	June 25	17·89	...	July 26	·65	50·9	June 28	41·24	2·9	Aug. 30	·46	22·7
28	·46	58·5	July 31	·86	...	Sept. 1	·51	50·2	Aug. 29	·33	3·0			
Sept. 4	·62	62·9	Sept. 5	·83	12·9									

Digitized by Google

1889	α	δ (south)	1889	α	δ (south)	1889	α	δ (south)	1889	α	δ (south)	1889	α	δ (south)
m	s	′	r	s	′	w	s	′	α	s	″	η	s	′
Aug. 27	54·18	42·0	June 26	59·66	1·6	June 21	27·25	32·3	June 25	18·15	57·6	Aug. 4	21·76	27·5
31	53·96	42·3	Aug. 8	·50	1·7	28	·16	33·9	Aug. 8	17·99	58·0			
n			29	·69	1·6	Aug. 27	·39	33·9	Sept. 5	18·23	57·9	θ		
			Sept. 4	·42	...	Sept. 6	·35	34·3				July 31	23·75	59·5
June 19	26·88	7·7							β			Aug. 29	·87	59·3
Sept. 5	27·04	8·4	s			x			June 26	38·05	15·8	ι		
o			June 19	53·28	21·6							July 27	44·82	3·6
			July 27	·16	22·7	June 17	22·47	61·4	γ			Aug. 30	·90	4·1
June 24	53·50	22·4	Aug. 30	·22	23·0	19	·48	62·7	June 21	57·38	51·7			
Sept. 12	·60	21·1				Aug. 4	·47	59·1	Aug. 27	·17	52·4	ι'		
p			t			31	·37	62·3				June 26	46·70	56·6
			June 22	4·47	19·2				δ			Sept. 4	·85	57·2
June 22	56·08	49·2	July 31	·34	19·7									
23	55·85	51·5	Sept. 5	·52	19·3	y			June 17	39·94	49·6	κ		
25	·88	51·8				June 22	25·94	54·0	19	·91	51·2	June 21	3·71	1·1
Sept. 1	56·18	52·7	u			July 27	·92	55·1	Aug. 31	·57	50·7	Aug. 8	·73	2·0
			June 25	43·85	27·8	Aug. 29	·87	55·0	Sept. 6	·89	51·5	Sept. 5	·72	0·0
q			Sept. 12	·76	23·9									
June 17	23·63	24·1	15	·88	23·0	z			ϵ			μ		
21	·66	21·7										June 17	9·31	13·4
28	·82	22·9	v			June 24	3·50	58·9	June 28	17·53	51·1	19	·03	14·7
Aug. 27	·71	...	June 24	56·21	26·3	July 31	·25	59·4				Aug. 27	8·88	12·3
31	·53	23·2	July 26	·17	28·4	Sept. 4	·40	...	ζ			31	9·05	13·7
Sept. 6	·85	23·1	Sept. 1	·10	25·1	15	·48	61·6	July 26	4·83	12·6	Sept. 12	8·86	11·9

Day corrections were determined by comparing with their first means the reference stars and other stars which had been observed at least four times :—

1889	First Values			Later Values			1889	First Values			Later Values		
	$\Delta\alpha$	$\Delta\delta$	No. Stars	$\Delta\alpha$	$\Delta\delta$	No. Stars		$\Delta\alpha$	$\Delta\delta$	No. Stars	$\Delta\alpha$	$\Delta\delta$	No. Stars
June 17	s −0·07	″ − 0·1	7	s	″		July 31	s +0·06	″ − 0·3	4	s +0·076	+0″·98	7, 6
19	−0·01	+ 0·7	7, 6				Aug. 27	−0·01	+ 1·1	5, 4			
21	+0·02	− 1·2	5, 4				29	−0·10	+ 0·2	3			
22	−0·06	− 1·1	4	−0·074	−0·29	8	30	−0·11	− 0·4	3			
23	+0·10	− 0·3	5				31	+0·06	+ 0·8	7			
24	+0·12	− 0·6	4	+0·021	+0·34	6	Sept. 1	−0·04	+ 1·0	5, 4			
25	+0·09	+ 0·4	4, 2	+0·043	+2·00	7, 4	4	+0·04	− 0·1	4, 2			
26	−0·03	+ 0·2	4				5	−0·05	+ 0·9	3, 2			
28	+0·04	− 0·3	3				6	−0·07	+ 0·5	7			
July 26	−0·02	+ 0·1	2	−0·038	+1·12	3	12	+0·11	− 0·8	3			
27	+0·01	− 0·8	3	−0·002	+0·19	7	15	−0·03	+ 1·5	4, 2			

Digitized by Google

The "later values," afterwards determined from comparisons with the normal places, which are given in the table for the days on which the planet was observed, contain in this case a considerable systematic correction required by the Hamburg observations. The values $\Delta\alpha$ and $\Delta\delta$, as tabulated under these headings, were used to correct the observed positions of the stars, and then the following mean results were found :—

Star	R.A. 1889·0	Dec. 1889·0	No. obs.	II — I		Star	R.A. 1889·0	Dec. 1889·0	No. obs.	II — I	
	h m s	° ′ ″					h m s	° ′ ″			
A	19 6 39·462	−8 7 28·26	15, 12	+ 2	− 6	u	19 43 43·888	−4 48 24·53	3	+58	+37
B	14 37·330	5 37 21·34	20, 18	0	− 4	v	44 56·147	4 58 26·33	3	−13	+57
a	21 25·268	5 57 21·22	4	−22	− 2	w	47 27·282	4 51 33·56	4	− 8	+ 4
b	23 2·562	6 24 2·02	3	+32	−52	x	48 22·442	5 20 1·02	4	− 8	+38
c	24 6·240	5 9 7·50	2	+20	+50	y	51 25·860	4 58 55·27	3	−50	−57
d	25 17·928	5 54 12·0	3, 1	+68		z	52 3·431	5 28 59·78	4, 3	+21	+22
e	25 40·293	5 21 3·23	3	+43	−73	α	52 18·138	6 38 57·40	3	+18	+40
f	27 50·520	4 58 49·27	4	−30	+43	β	52 38·02	4 39 15·6	1		
g	28 37·650	4 41 22·90	2	−60	+40	γ	54 57·280	4 36 52·07	2	+10	+ 3
h	29 20·70	4 33 7·5	1			δ	55 39·805	6 40 50·27	4	−25	+43
i	30 41·255	5 1 3·00	2	−25	0	ε	56 17·57	5 17 51·4	1		
k	30 53·505	4 32 43·95	3	+15	+ 5	ζ	57 4·81	8 0 12·5	1		
l	31 22·160	3 43 21·20	2	−70	−10	η	57 21·76	4 56 27·5	1		
m	31 54·095	4 53 41·17	2	+25	+93	θ	59 23·790	6 53 59·47	2	−20	− 7
n	34 26·930	5 42 7·25	2	−30	+85	ι	20 0 44·810	4 44 4·45	2	−50	−55
o	34 53·615	4 17 22·45	2	+65	−65	ι′	0 46·782	7 19 56·87	2	+12	+ 3
p	35 56·021	4 32 51·30	4	+21	−20	κ	1 3·710	8 30 1·13	3	−10	−13
q	39 23·695	4 47 23·06	6, 5	− 5	− 6	μ	5 9·042	9 10 12·85	5	+12	+35
r	40 59·546	3 56 1·50	4, 3	−24	+10	C	14 31·556	6 42 29·53	9	− 4	+ 7
s	41 53·183	5 30 22·60	3	−37	−20	D	19 55·082	3 9 36·44	11, 9	+12	+16
t	43 4·427	4 46 19·58	3	−13	−18						

The mean error of one observation is found from 153 observations of 36 stars to be in R.A. $\pm 0^s\cdot105$, and from 140 observations of 35 stars in Dec. $\pm 1''\cdot22$. The reference stars alone give the values $\pm 0^s\cdot089$ and $\pm 0''\cdot91$ (55 and 48 observations), while the comparison stars give the very large values $\pm 0^s\cdot116$ and $\pm 1''\cdot39$ from 98 and 92 observations.

MOUNT HAMILTON.

A remarkably fine series ot observations was made with the 6·4-inch Repsold Meridian-Circle by Professor Schæberle, and communicated with the following explanation.

Digitized by Google

The observations were referred to the *Berliner Jahrbuch* system in both co-ordinates. The transits were recorded over seven wires on the chronograph. The correction in zenith distance was invariably made at the centre of the field by means of a micrometer wire, the telescope being always left unclamped. Immediately after the bisection, the four microscopes of the fixed circle were read (by an assistant, Mr. A. Leuschner) and then those of the moveable circle were also read. After the eight microscopes had been recorded the fixed circle was again examined, and whenever the readings indicated a change in the position of the telescope the observation has been rejected. Usually the moveable circle was clamped to a different zero for each observing night. Slight variations in the azimuth during the night were detected with the aid of the mire mark situated 80 feet from, and in the focus of, a 6-inch object glass mounted on the South collimator pier.

The following order of the observations has been adhered to with a few exceptions :—

h	m		h	m		h	m	
17	25	Mire	18	50	θ Serpentis	20	18	γ Cygni
	35	Level		55	γ Lyræ		22	Nadir
	45	Collimation	19	0	λ Aquilæ		28	ϵ Delphini
	55	Mire		5	Nadir		33	73 Draconis
18	8	δ Ursæ min.		12	ω Aquilæ		36	Mire
	15	η Serpentis		16	Mire		41	ϵ Aquarii
	20	Nadir	19	21 to	Victoria and com-		50	76 Draconis
	27	23 H. Camel.	20	5	parison stars		55	Nadir
	33	α Lyræ				21	3	ν Aquarii
	40	110 Herculis	20	8	Mire		8	Mire
	45	Mire		12	α^2 Capricorni		12	Level

In the reductions, both the level and azimuth errors were treated as variables, the interpolated values being obtained from a curve which best represented the observed values. The Declinations were corrected for flexure, but not for errors of division, which were not yet determined.—

The following are the resulting mean places 1889·0 as communicated by Professor Schæberle. The reference stars were not observed ; apparently the request to observe them, which was made only a short time after the distribution of the list of comparison stars, had not reached the Lick Observatory. A wrong star was observed for **f**, and another on two days for β ; on two other days, however, the right star had accidentally been observed and the places were subsequently communicated. Star λ was not observed, as the withdrawal of ι' from the list and its replacement by λ could not come under the observer's notice early enough.

Digitized by Google

1889	Position of Instrument	R.A. 1889	South Dec. 1889 F.C.	South Dec. 1889 M.C.
a		s	″	″
June 9	W	25·25	20·68	21·22
10	W	·27	21·32	22·08
21	E	·23	21·44	...
23	E	·22	21·94	21·46
		25·242	21·34	21·59
b				
June 11	W	2·53	1·84	2·46
13	W	·55	0·78	0·98
24	E	·56	1·64	0·76
July 2	E	·50	1·36	0·93
		2·535	1·40	1·28
c				
June 16	W	6·35	6·34	6·27
17	W	·34	6·04	7·10
21	E	·25	6·46	6·87
23	E	·24	6·63	7·13
		6·295	6·37	6·84
d				
June 9	W	[18·12]	[13·80]	13·59
10	W	18·00	12·67	13·04
18	W	·00	12·98	13·25
July 3	E	17·98	13·53	13·15
4	E	·98	13·14	12·93
5	E	·99	12·88	12·58
		17·990	13·00	13·09
e				
June 13	W	40·36	2·32	3·16
19	W	·31	3·08	2·85
20	W	·38	2·10	1·99
24	E	·35	3·14	2·93
July 2	E	·37	2·41	2·58
7	E	·47	3·12	3·12
		40·373	2·69	2·77
—				
June 11	W	[30·49]	49·56	49·89
16	W	30·75	49·58	49·50
17	W	·72	49·84	50·28
21	E	·65	49·91	50·14
23	E	·68	50·23	50·43
July 3	E	·71	50·03	49·95
		30·702	49·86	50·03

1889	Position of Instrument	R.A. 1889	South Dec. 1889 F.C.	South Dec. 1889 M.C.
g		s	″	″
June 9	W	37·67	23·59	23·63
10	W	·73	23·64	23·93
24	E	·70	24·06	24·15
July 2	E	·67	23·77	23·62
		37·692	23·76	23·83
h				
June 18	W	20·86	5·44	5·47
19	W	·78	5·58	6·05
21	E	·80	...	...
23	E	·77	...	...
		20·802	5·51	5·76
i				
June 17	W	41·19	3·01	3·61
July 3	E	[·09]	[1·98]	2·43
4	E	[·23]	[2·84]	2·19
		...	...	2·74
k				
June 11	W	53·45	43·55	44·05
13	W	·41	43·52	44·01
21	E	·38	44·58	44·64
23	E	·41	44·03	44·23
		53·412	43·92	44·23
l				
June 20	W	22·27	19·04	19·00
July 5	E	·23	19·19	19·44
7	E	·26	19·24	19·48
		22·253	19·13	19·31
m				
June 9	W	54·02	40·42	40·78
10	W	·01	40·03	40·42
18	W	·03	40·18	40·31
19	W	·02	39·72	39·12
24	E	·08	41·32	41·23
July 2	E	·03	41·27	41·13
8	E	53·99	41·24	40·85
		54·026	40·68	40·55

1889	Position of Instrument	R.A. 1889	South Dec. 1889 F.C.	South Dec. 1889 M.C.
n		s	″	″
June 16	W	27·00	8·14	7·69
17	W	26·97	7·71	8·76
July 5	E	·94	8·22	7·78
7	E	·97	7·92	7·43
		26·970	8·00	7·91
o				
June 18	W	53·57	21·71	21·16
19	W	[·69]	21·14	20·89
July 3	E	·56	21·81	21·79
4	E	·57	21·73	21·94
		53·567	21·60	21·44
p				
June 9	W	56·08	49·92	49·81
10	W	·08	49·71	48·33
11	W	·06	49·71	50·23
13	W	·04	49·84	50·36
21	E	·03	50·16	50·22
23	E	·03	50·36	50·56
24	E	·07	50·39	49·65
July 2	E	·09	50·31	50·10
		56·060	50·05	49·91
q				
June 9	W	23·68	22·99	22·70
10	W	·75	22·78	23·71
11	W	·73	22·58	22·15
21	E	·80	22·57	22·97
23	E	·71	22·94	22·26
24	E	·77	23·38	23·60
		23·740	22·87	23·06
r				
June 13	W	59·54	1·16	0·45
16	W	·56	0·86	0·88
July 2	E	·52	1·24	0·95
5	E	·55	0·54	0·43
		59·542	0·95	0·68
s				
June 17	W	53·36	23·00	23·72
18	W	·36	24·22	24·49
July 3	E	·37	23·48	23·75
4	E	·40	23·03	23·19
		53·372	23·43	23·79

Digitized by Google

1889	Position of Instrument	R.A. 1889	South Dec. 1889 F.C.	South Dec. 1889 M.C.
t		s	″	″
June 9	W	4·49	18·95	19·14
10	W	·52	18·88	19·12
11	W	·56	18·40	19·02
13	W	·52	18·82	19·19
21	E	·51	18·55	18·95
23	E	·59	18·70	19·02
24	E	·54	19·04	19·16
July 2	E	·51	19·54	18·93
		4·530	18·86	19·07
u				
June 11	W	43·90	25·94	25·90
13	W	·84	25·66	26·24
21	E	·91	25·84	26·24
23	E	·88	25·88	26·20
24	E	·91	26·21	26·33
		43·888	25·88	26·18
v				
June 16	W	56·28	28·53	28·44
17	W	·25	27·23	27·84
July 3	E	·24	27·89	28·28
4	E	·25	27·73	27·71
		56·255	27·84	28·07
w				
June 9	W	27·27	32·48	32·59
10	W	·25	32·88	33·27
11	W	·25	32·68	33·26
July 2	E	·23	33·78	33·48
3	E	·24	33·12	32·92
4	E	·23	33·51	33·45
		27·245	33·08	33·16
x				
June 13	W	22·42	0·30	0·86
16	W	·50	0·59	0·19
17	W	·43	0·55	0·01
18	W	·47	0·35	0·73
19	W	·43	0·40	0·49
21	E	·42	0·88	1·21
23	E	·43	0·58	0·61
24	E	[·56]	0·79	0·94
		22·443	0·59	0·63

1889	Position of Instrument	R.A. 1889	South Dec. 1889 F.C.	South Dec. 1889 M.C.
y		s	″	″
June 9	W	25·96	54·79	54·63
10	W	·91	54·13	54·72
11	W	·92	54·02	54·52
July 3	E	·96	54·28	54·38
5	E	·91	54·21	53·96
		25·932	54·28	54·44
z				
June 13	W	3·52	59·10	59·75
16	W	·60	59·11	58·83
17	W	·61	59·56	59·22
July 7	E	·59	59·50	59·85
8	E	·52	59·50	59·46
		3·568	59·38	59·42
α				
June 18	W	18·20	56·04	56·27
19	W	·11	55·44	56·61
July 2	E	...	56·55	...
		18·155	56·14	56·44
—				
June 21	E	19·39	13·20	13·20
24	E	·42	13·25	13·11
		19·405	13·22	13·15
β				
June 20	W	38·08	17·06	17·23
23	E	·12	...	...
		38·100	...	...
γ				
June 11	W	57·31	52·54	53·24
17	W	·35	52·60	53·31
21	E	·33	52·92	52·92
23	E	·38	52·53	52·83
24	E	[·41]	53·02	52·88
		57·342	52·70	53·04
δ				
June 9	W	39·84	50·17	49·86
10	W	·87	49·23	49·55
19	W	·79	50·34	50·90
July 7	E	·92	49·86	49·61
		39·855	49·89	49·98

1889	Position of Instrument	R.A. 1889	South Dec. 1889 F.C.	South Dec. 1889 M.C.
ε		s	′	′
June 13	W	17·73	49·57	49·98
16	W	·77	49·59	49·29
July 5	E	·70	48·69	49·18
		17·733	49·14	49·48
ζ				
June 18	W	4·90	14·48	14·23
20	W	·85	14·83	14·87
21	E	·81	15·05	14·88
24	E	·89	15·45	15·77
		4·862	14·95	14·94
η				
June 11	W	21·80	28·72	28·94
July 4	E	·79	28·59	28·64
8	E	·83	28·53	28·84
		21·807	28·64	28·81
θ				
June 10	W	23·87	57·58	58·29
July 5	E	·85	57·49	58·09
7	E	·97	58·04	58·18
		23·897	57·67	58·19
ι				
June 11	W	44·90	4·52	5·07
13	W	·87	4·42	...
July 8	E	·88	4·09	4·47
		44·883	4·28	4·77
ι′				
June 16	W	46·78	54·70	55·67
17	W	·65	55·42	...
20	W	...	55·71	55·30
July 3	E	·72	55·89	55·77
4	E	·78	56·01	56·35
		46·732	55·61	55·77
κ				
July 5	E	3·79	59·21	59·54
7	E	·79	59·77	60·03
		3·790	59·49	59·78
μ				
June 18	W	8·98	12·84	12·91
19	W	·94	12·07	12·52
20	W	...	12·72	13·16
21	E	·92	13·12	13·63
23	E	...	13·27	13·39
24	E	·97	13·03	13·17
		8·952	12·84	13·13

Digitized by Google

The means given in the column R.A. are those formed by Professor Schæberle throughout, viz., simple means for all observations without regard to the position of the instrument, and excluding the observations placed in brackets. The bracketing however seems only to mean that the observation was incomplete, and the two observations of star i thus designated were retained afterwards, as besides them there would be only a single observation of the star. For Declination, the means for the moveable circle are those taken by Professor Schæberle in the same manner without exception, while for the values depending on the readings of the fixed circle his means were slightly changed whenever the number of observations was not the same for both positions, separate means for each of the two being formed and the simple mean taken from the two values.

Day corrections were determined by comparing the individual results with the means given in the preceding tables, using for Declination the readings of the fixed circle only. These were the following :—

1889	$\Delta\alpha$	$\Delta\delta$	No. Stars	1889	$\Delta\alpha$	$\Delta\delta$	No. Stars	1889	$\Delta\alpha$	$\Delta\delta$	No. Stars
	s	″			s	″			s	″	
June 9	+ 0·008	− 0·09	9	June 18	− 0·016	− 0·06	9, 8	July 2	+ 0·010	+ 0·32	8, 9
10	− 0·004	− 0·24	11	19	+ 0·029	− 0·33	7	3	+ 0·001	+ 0·17	8
11	− 0·003	− 0·15	11, 12	20	− 0·007	− 0·18	3, 5	4	− 0·004	+ 0·08	7
13	+ 0·015	− 0·15	11	21	+ 0·017	+ 0·10	14, 12	5	+ 0·017	− 0·14	8, 7
16	− 0·040	− 0·02	9	23	+ 0·010	+ 0·17	11	7	− 0·038	+ 0·10	7, 6
17	− 0·001	− 0·20	9	24	− 0·019	+ 0·31	11, 12	8	+ 0·018	+ 0·10	4

Though the day corrections generally are very small, showing a remarkable consistency of the series within itself, yet a systematic difference between the Declinations obtained in the two positions, from comparison with zero-stars rather a little too far distant from the Declination of the zone, is brought out quite clearly by the high accuracy of the observations. All mean $\Delta\delta$ determined for the first nine days, when the instrument was in position W., are negative, and those for eight of the nine following days, in position E., are positive. The mean values are, for W. $= -0''{\cdot}16$, for E. $= +0''{\cdot}13$, and the average deviation from these means or the variable day error, is only $0''{\cdot}08$; while for Right Ascension the mean amount of day error is increased by some few larger values, and comes out from the 18 values $= 0^s{\cdot}014$.

It is probable that errors of division are the chief cause of the difference between the values of $\Delta\delta$ found in the two positions of the instrument, as well as of the differences between the results given by the two circles. The best method of comparing the results given by the two circles is, therefore, to compare the means $\frac{1}{2}$(E. + W.) in the series of Declinations given by the fixed circle, or means reduced to $\frac{1}{2}$(E. + W.) with the mean difference in case of observations made in one position only, with the

Digitized by Google

indiscriminate means in the series depending upon the moveable circle whose zero-point generally was changed from day to day, without application of day corrections to either series. In this way it was found that the South Declinations furnished by the moveable circle were generally 0″·15 larger than those from the fixed circle, this excess, though small, being shown by 29 out of the 37 stars compared ; the means in three groups are—

12 stars,	a to m,	+0″·16
13 „	n „ z	+0·07
12 „	α „ μ	+0·22

A correction of +0″·15, therefore, was applied to the indiscriminate means obtained with the moveable circle. The corrected means are shown in the following table under the head M.C., while the numbers under F.C. are the simple means of the Declinations obtained with the fixed circle and reduced to homogeneity by applying the day corrections, as also are the values given for Right Ascension. Only those individual results were excluded which are placed in brackets in the table of observations ; Declinations from the moveable circle, therefore, have been admitted in some cases when those read from the fixed circle were excluded, and the bracket embracing the latter values might be understood to indicate that the other value was also a little doubtful, but the Declinations are so closely accordant throughout that it would not matter if the few values in question were withdrawn. Finally, simple means between the two columns F.C. and M.C. were adopted as the Declinations resulting from Professor Schæberle's observations, with the exception of star **i**, for which double weight was given to the result M.C. The differences of these means from the means employed in determining the day corrections and the corresponding differences for Right Ascension are given in the column II – I.

Mean Results of Mount Hamilton Observations of Victoria Comparison Stars.
Mean Equinox 1889·0.

Star	R.A.	No. of obs.	Declination				II – I	
			F.C.	M.C.	No. of obs.	adopted		
	h m s		″	″		° ′ ″	s	″
a	19 21 25·250	4	21·36	21·44	4, 3	– 5 57 21·40	+0·008	–0·06
b	23 2·536	4	1·32	1·13	4	6 24 1·23	+ 1	+ 17
c	24 6·292	4	6·35	6·69	4	5 9 6·52	– 3	– 15
d	25 17·989	5	13·08	12·94	5, 6	5 54 13·01	– 1	– 1
e	25 40·381	6	2·68	2·62	6	5 21 2·65	+ 8	+ 4
—	27 30·699	5	49·85	49·88	6	4 57 49·86	– 3	0
g	28 37·691	4	23·70	23·68	4	4 41 23·69	– 1	+ 7
h	29 20·818	4	5·71	5·61	2	4 33 5·66	+ 16	– 15
i	30 41·166	3	3·21	2·59	1, 3	5 1 2·80	...	

Digitized by Google

Star	R.A.	No. of obs.	Declination				II — I	
			F.C.	M.C.	No. of obs.	adopted		
	h m s		"	"		° ′ ″	s	″
k	19 30 53·422	4	43·93	44·08	4	— 4 32 44·00	+0·010	—0·08
l	31 22·244	3	19·23	19·16	3	3 43 19·20	— 9	— 7
m	31 54·029	7	40·60	40·40	7	4 53 40·50	+ 3	+ 18
n	34 26·955	4	8·06	7·76	4	5 42 7·91	— 15	+ 9
o	34 53·560	3	21·63	21·29	4	4 17 21·46	— 7	+ 14
p	35 56·064	8	50·02	49·76	8	4 32 49·89	+ 4	+ 16
q	39 23·741	6	22·86	22·91	6	4 47 22·88	+ 1	— 1
r	40 59·543	4	0·95	0·53	4	3 56 0·74	+ 1	+ 21
s	41 53·368	4	23·44	23·64	4	5 30 23·54	— 4	— 11
t	43 4·534	8	18·83	18·92	8	4 46 18·87	+ 4	— 1
u	43 43·892	5	25·85	26·03	5	4 48 25·94	+ 4	— 6
v	44 56·244	4	27·84	27·92	4	4 58 27·88	— 11	— 4
w	47 27·246	6	33·06	33·01	6	4 51 33·04	+ 1	+ 4
x	48 22·445	7	0·59	0·48	7, 8	5 20 0·54	+ 2	+ 5
y	51 25·936	5	54·38	54·29	5	4 58 54·34	+ 4	— 6
z	52 3·573	5	59·39	59·27	5	5 28 59·33	+ 5	+ 5
α	52 18·161	2	56·03	56·29	3, 2	6 38 56·16	+ 6	— 2
—	52 19·404	2	13·02	13·00	2	4 39 13·01	— 1	(+ 21)
β	52 38·101	2	17·24	17·08	1	4 39 17·16	...	
γ	54 57·348	4	52·68	52·89	5	4 36 52·78	+ 6	— 8
δ	55 39·854	4	50·04	49·83	4	6 40 49·94	— 1•	— 5
ε	56 17·731	3	49·39	49·33	3	5 17 49·36	— 2	— 22
ζ	57 4·856	4	14·95	14·79	4	8 0 14·87	— 6	+ 8
η	57 21·810	3	28·60	28·66	3	4 56 28·63	+ 3	+ 1
θ	59 23·889	3	57·80	58·04	3	6 53 57·92	— 8	— 25
ι	20 0 44·893	3	4·41	4·62	3, 2	4 44 4·51	+ 10	— 23
ι′	0 46·722	4	55·58	55·62	5, 4	7 19 55·60	— 10	+ 1
κ	1 3·780	2	59·51	59·63	2	8 29 59·57	— 10	(— 8)
μ	5 8·955	4	12·84	12·98	6	9 10 12·91	+ 3	7

The sums of the squares of the differences of the single reduced places with these means, F.C. only being used for the Declinations, is, for 160 observations of 37 stars, in R.A. 0·088625, and for 164 observations of 36 stars, in Dec. 12·7097; whence, 18 day corrections having been determined from these observations, the mean error of an observation is: in R.A. $\pm 0^{s}\cdot0291$; in Declination $\pm 0''\cdot340$.

Digitized by Google

KÖNIGSBERG.

Observations were made by Professor Peters with the $4\frac{1}{4}$-inch Repsold Meridian-Circle. The separate results were communicated with full detail of each day's observations. The places were referred in both co-ordinates to the *Berliner Jahrbuch* system, the stars α Lyræ, 110 Herculis, λ Aquilæ, with δ Ursæ minoris and 51 H. Cephei as pole stars, being regularly observed before the *Victoria* stars, ε and α Delphini and ε Aquarii, together with 76 Draconis as a polar star, nearly always after the group. It was however found necessary to introduce some modifications into the Königsberg reduction, whose results appeared at first quite unintelligible, till it was discovered there was an unusually large magnitude co-efficient in the observer's personal equation. The places as affected with this equation were obtained in the final reduction as follows :—

1889	A		B		C		D	
	$19^h\ 6^m$	$-\ 8°\ 7'$	$19^h\ 14^m$	$-\ 5°\ 37$	$20^h\ 14^m$	$-\ 6°\ 42'$	$20^h\ 19^m$	$-\ 3°\ 9'$
	s	"	s	"	s	"	s	"
June 22	39·48	27·40	37·39	20·47	31·64	30·07	...	...
23	·46	27·42	·40	20·33	·65	29·27	...	...
24	·46	27·45	·37	23·09	·70	29·96	55·23	36·18
25	·56	27·01	·48	21·32	...	...	...	...
26	·55	27·75	·44	19·54	·66	28·52	·28	35·70
28	·51	29·31	·44	22·12	·72	30·17	·26	37·01
29	·49	29·34	·43	22·28	·64	30·60	·25	35·02
30	·51	25·15	·41	22·72	·71	...	·24	37·06
July 9	·52	25·94	·42	20·79	·67	28·39	·21	36·19
11	·47	28·43	·39	20·89	·67	29·14	·18	35·57
25	...	...	·42	21·22	...	...	...	...
Aug. 1	·50	28·31	·40	21·32	·68	27·69	·22	36·39
5	·43	28·65	·39	20·44	·58	28·49	·19	36·04
19	·49	26·89	·42	20·78	·66	31·28	·18	36·82
25	·51	29·81	·43	22·21	·69	30·15	·28	36·63
30	·50	29·45	...	...	...	...	...	...
Sept. 4	·47	28·78	·30	21·20	·59	27·75	·06	...
7	·47	28·74	·42	23·16	·72	30·12	·21	37·97
17	·48	28·25	·37	21·68	·58	29·92	·18	36·23
18	·49	28·73	·42	21·64	·93*	27·68	·45	37·86
22	·50	27·66	·40	20·47	·69	31·25	·23	36·20
24	·49	27·62	·37	20·57	·60	29·40	·18	36·65
25	·39	28·85	·31	21·85	...	...	...	...
Oct. 7	·53	28·86	·42	21·91	·68	29·12	·22	37·64

* C noted very faint.

Digitized by Google

1889	α	δ (south)	1889	α	δ (south)	1889	α	δ (south)	1889	α	δ (south)	1889	α	δ (south)
a	s	′	h	s	′	q	s	′	x	s	′	ε	s	′
June 25	25·53	20·38	June 29	21·07	4·29	June 23	23·97	22·68	June 24	22·75	60·06	Aug. 1	17·80	49·45
26	·39	19·94				Aug. 25	·92	22·47	30	·76	57·30	Sept. 24	·73	49·21
Sept. 25	·33	21·45				Sept. 4	·98	22·01	Aug. 1	·69	60·65			
Oct. 7	·38	22·55	i			7	·98	22·72	Sept. 7	·73	59·81			
			Aug. 30	41·27	4·60							ζ		
			Sept. 22	·43	3·54									
b						r						July 11	5·11	14·74
June 28	2·82	1·00							y					
29	·80	2·20	k			June 30	59·75	1·90						
Aug. 5	·71	0·80	June 23	53·56	45·01	Aug. 1	·71	1·89	June 29	26·23	51·32	η		
			Sept. 17	·61	43·89				Sept. 17	·07	52·49	July 9	22·10	27·77
			18	·60	43·90				24	·10	53·43			
c						s								
June 22[1]	6·50	6·03				June 24	53·57	21·85				θ		
30[2]	·65	6·32	l			July 11	·56	23·51						
July 11	·56	3·90	July 25	22·44	19·05				z			Aug. 5	24·07	57·34
			Sept. 4	·35	18·93				Aug. 5	3·80	59·66			
									Sept. 22[2]	·85	57·04			
d						t			Oct. 7[4]	·82	61·14	ι		
			m			June 22	4·71	19·03				Sept. 18	45·13	...
June 23	18·22	12·95	June 30	54·09	40·90	29	·82	17·88						
July 25	·21	12·29	Aug. 25	·11	41·59	July 9	·71	20·25						
Aug. 1	·27	13·36	Sept. 7	·07	40·61	Aug. 5	·65	19·45						
30	·18	13·20				Sept. 17	·68	19·23	α			κ		
Sept. 7	·22	11·17				18	·70	21·97	June 26	18·36	55·71	Aug. 25	3·98	59·74
			n			22	·75	17·77						
			June 24	26·96	7·07									
e			July 11	·97	8·09									
June 24[3]	40·67	62·13	Oct. 7	·99	9·32	u			β			λ		
Aug. 25	·60	63·85										July 25	46·16	33·29
Sept. 17	·53	62·74				Aug. 19	44·21	24·71	June 23	38·36	18·14	Aug. 1	·02	35·41
18[2]	·71	64·00	o			Sept. 24	·08	26·91				Sept. 7	·07	35·55
22[2]	·66	58·98	June 26	53·71	20·45							22	·11	33·90
			Aug. 19	·74	20·14							24	45·91	34·37
						v			γ					
f			p			June 26	56·37	27·39	June 22	57·53	52·95			
June 25	50·73	50·07				Oct. 7	·30	29·06	Aug. 25	·55	50·59	μ		
26	·65	48·79	June 22	56·18	50·32							June 24	9·10	14·31
July 9	·64	50·20	28	·25	49·58							26	·10	12·26
Sept. 24	·67	49·96	29	·24	48·13	w						29	·08	12·41
			July 9	·20	50·36							30	·10	14·39
			Aug. 5	·25	50·38	June 23	27·43	33·44	δ			July 9	·02	13·43
g			Sept. 17	·22	50·54	July 25	·50	33·64	July 25	40·20	47·40	11	·07	12·15
June 28	38·08	24·27	18	·32	48·85	Aug. 25	·48	34·18	Sept. 4	·00	51·09	Aug. 5	·06	13·23
Oct. 7	37·89	23·87	22	·21	49·62	Sept. 4	·42	33·14	7[2]	·09	46·77			

[1] Scarcely visible. [2] Very faint. [3] Extremely faint. [4] Faint.

Digitized by Google

The instrument was kept in the same position, circle W., throughout the series. The transits were registered on a chronograph over a very large number of wires—generally from 20 to 25.

The Right Ascensions of the bright reference stars appear to be very accurate ; day corrections, therefore, were first determined from them alone, starting from the means of their observations on those 18 days when all of them had been observed.

The means of corrected Right Ascensions were taken for those of the other stars which had been observed five or more times, and these were used with the four reference stars in a new determination of day corrections, with exception of star **e**, which was noted very faint in three of its five observations.

It was noticed that the Declinations given by the instrument differed sensibly from the A.G.C. for two of the *Berliner Jahrbuch* stars, the reductions of the Declinations computed with the equator-points assumed by Professor Peters being—

for α Lyræ	+ 0·06	22 observations
„ 110 Herculis	— 0·48	22 „
„ λ Aquilæ	— 0·07	21 „
„ ε Delphini	— 0·11	19 „
„ α Delphini	+ 0·13	20 „
„ ε Aquarii	+ 0·46	19 „

These corrections were applied for those days on which not the whole of the *Berliner Jahrbuch* stars were observed, and the Declinations of the reference stars were thus determined. Proceeding then in the same manner as for the Right Ascensions the day corrections $\Delta\delta$ of the following table were determined :—

1889	$\Delta\alpha$	$\Delta\delta$	No. Stars	1889	$\Delta\alpha$	$\Delta\delta$	No. Stars	1889	$\Delta\alpha$	$\Delta\delta$	No. Stars
	s	"			s	"			s	"	
June 22	+ 0·022	— 0·17	5	July 9	+ 0·009	— 0·27	7	Sept. 4	+ 0·092	— 0·38	4, 3
23	+ 0·010	— 0·31	4	11	+ 0·016	— 0·49	5	7	— 0·015	+ 0·58	6
24	0·000	+ 0·41	5	25	— 0·033	— 0·48	3	17	+ 0·038	+ 0·20	6
25	— 0·075	— 0·56	2	Aug. 1	— 0·005	— 0·08	6	18	— 0·095	+ 0·35	6
26	— 0·034	— 1·04	5	5	+ 0·037	— 0·04	7	22	0·000	— 0·32	7
28	— 0·032	+ 0·61	5	19	+ 0·010	+ 0·10	4	24	+ 0·060	— 0·25	5
29	— 0·020	+ 0·03	7	25	— 0·030	+ 0·80	4	25	+ 0·095	+ 0·62	2
30	— 0·022	— 0·22	5, 4	30	+ 0·010	+ 1·12	2	Oct. 7	— 0·015	+ 0·52	4

Digitized by Google

Applying these corrections to the positions tabulated above, the reduced means become the following :—

Star	R.A. 1889·0	Dec. 1889·0	Obs.	Star	R.A. 1889·0	Dec. 1889·0	Obs.	Star	R.A. 1889·0	Dec. 1889·0	Obs.
	h m s	° ′ ″			h m s	° ′ ″			h m s	° ′ ″	
A	19 6 39·487	−8 7 28·03	23	n	19 34 26·975	−5 42 8·01	3	β	19 52 38·370	−4 39 18·45	1
B	14 37·403	5 37 21·41	23	o	34 53·715	4 17 20·76	2	γ	54 57·535	4 36 51·45	2
a	21 25·401	5 57 21·19	4	p	35 56·229	4 32 49·67	8	δ	55 40·112	6 40 48·51	3
b	23 2·773	6 24 1·13	3	q	39 23·976	4 47 22·17	4	ϵ	56 17·792	5 17 49·50	2
c	24 6·577	5 9 5·71	3	r	40 59·712	3 56 2·05	2	ζ	57 5·126	8 0 15·23	1
d	25 18·214	5 54 12·43	5	s	41 53·575	5 30 22·72	2	η	57 22·109	4 56 28·04	1
e	25 40·617	5 21 2·06	5	t	43 4·716	4 46 19·40	7	θ	59 24·107	6 53 57·38	1
f	27 50·664	4 58 50·29	4	u	43 44·180	4 48 25·88	2	ι	20 0 45·035	...	1
g	28 37·963	4 41 23·50	2	v	44 56·313	4 58 28·48	2	κ	1 3·950	8 29 58·94	1
h	29 21·050	4 33 4·26	1	w	47 27·456	4 51 33·69	4	λ	2 46·056	7 20 34·61	5
i	30 41·355	5 1 3·67	2	x	48 22·722	5 19 59·28	4	μ	5 9·076	9 10 13·40	7
k	30 53·575	4 32 44·22	3	y	51 26·160	4 58 52·42	3	C	14 31·675	6 42 29·41	20, 19
l	31 22·403	3 43 19·42	2	z	52 3·832	5 28 59·23	3	D	19 55·226	3 9 36·49	18, 17
m	31 54·068	4 53 40·65	3	a	52 18·326	6 38 56·75	1				

Comparing the reduced observations with these means, the mean error of an observation is found—

from 84 and 82 observations of the 4 reference stars : in R.A. $\pm$0^s·041 ; in Dec. $\pm$0″·98
„ 101 „ „ 29 comparison „ „ $\pm$0·051 „ $\pm$1·20

After the large magnitude equation, however, was detected, it became evident that the great deviation of the star **C**, September 18, was not an accidental error, but the effect of the star being rendered very faint by clouds, and the Right Ascension of **D** on the same night has been observed too late very probably from the same reason, though no note was appended to the observation. It is only just, therefore, to exclude these two observations, whence the means for **C** and **D** become 31^s·667 from 19 observations, and 55^s·218 from 17 observations ; the mean error of one of the remaining 82 observations of Right Ascension of the reference stars is thus reduced to the very small quantity $\pm$0^s·031. The probable error of a day correction from the four stars would, therefore, be only $\pm$0^s·01 ; the very large values which were found for some days must thus be attributed to the magnitude equation and a consequent want of homogeneity in the clock-corrections. The Declinations on the contrary appear to be subject to very large accidental errors, and the determination of their day corrections is of little accuracy ; sometimes the corrections afforded by the four reference stars and by the smaller stars are completely at variance with each other, although each of the two groups be intrinsically in good agreement.

Nevertheless it was expected, that for the reference stars the Königsberg results would present a close accordance in both co-ordinates with those obtained at other

Digitized by Google

observatories belonging to, or afterwards reduced to the same system ; and a tolerably close accordance should be expected also for the comparison stars whenever they were observed at least 3 times, so that the accidental mean error would not exceed $0^s\cdot03$. Quite the contrary was found for the Right Ascensions : the Königsberg values were found to be systematically discordant from those of the other series to a quite unexpected extent ; and in a lesser degree a discordance was marked also in the Declinations. Instead of reproducing all the subsequent steps of computation, the last comparison is here given of the Königsberg observations, with the normal places N_3 which were derived from a combination of all the series. This comparison very nearly exhibits the true errors of the Königsberg results, the errors of the normals being extremely small.

Star	Mag.	Königsberg—N_3		No. obs.	Residuals		Star	Mag.	Königsberg—N_3		No. obs.	Residuals	
		$\Delta\alpha$	$\Delta\delta$						$\Delta\alpha$	$\Delta\delta$			
		s	"		s	"			s	"		s	"
A	5·8	+ 0·055	— 0·04	23	— 0·008	+ 0·37	u	8·0	+ 0·362	+ 0·01	2	+ 0·083	— 0·24
B	5·3	·063	— 0·27	23	+ 41	+ 0·29	v	6·7	·128	— 0·83	2	— 35	— 0·69
a	7·8	·206	+ 0·25	4	— 44	+ 0·06	w	8·2	·277	— 0·75	4	— 22	— 1·06
b	8·2	·284	+ 0·07	3	— 3	— 0·24	x	8·1	·350	+ 1·20	4	+ 60	+ 0·92
c	8·5	·355	+ 0·74	3	+ 41	+ 0·34	y	8·1	·290	+ 2·05	3	— 2	+ 1·77
d	8·4	·288	+ 0·69	5	— 18	+ 0·32	z	8·5	·345	+ 0·29	3	+ 17	— 0·11
e	8·3	·322	+ 0·86	5	+ 25	+ 0·52	α	8·0	·218	— 0·43	1	— 65	— 0·68
f	7·5	·167	— 0·72	4	— 59	— 0·82	β	8·0	·348	— 1·60	1	+ 65	— 1·85
g	8·5	·349	+ 0·41	2	+ 33	+ 0·01	γ	7·4	·233	+ 1·35	2	+ 2	+ 1·28
h	7·8	·324	+ 1·74	1	+ 70	+ 1·55	δ	8·3	·373	+ 1·11	3	+ 61	+ 0·77
i	7·7	·220	— 0·63	2	— 25	— 0·79	ε	6·6	·129	— 0·24	2	— 30	— 0·07
k	7·9	·197	— 0·20	3	— 67	— 0·42	ζ	8·0	·348	— 0·34	1	+ 62	— 0·59
l	8·0	·281	+ 0·09	2	+ 8	— 0·16	η	8·1	·377	+ 0·52	1	+ 82	+ 0·24
m	5·7	·069	— 0·01	3	+ 3	+ 0·43	θ	8·4	·317	+ 0·62	1	— 6	+ 0·25
n	6·6	·090	— 0·09	3	— 58	+ 0·08	ι	7·0	·185	...	1	— 13	...
o	7·6	·209	+ 0·92	2	— 30	+ 0·79	κ	7·5	·260	+ 0·79	1	+ 17	+ 0·69
p	7·6	·222	+ 0·29	8	— 17	+ 0·16	λ	8·1	·253	— 0·96	5	— 44	— 1·24
q	8·4	·314	+ 0·79	4	+ 1	+ 0·42	μ	6·5	·152	— 0·22	7	— 3	— 0·02
r	7·9	·223	— 0·92	2	— 46	— 1·14	C	6·4	·148	— 0·34	19	— 3	— 0·11
s	7·9	·288	+ 0·46	2	+ 19	+ 0·24	D	6·1	·140	— 0·38	17	+ 14	— 0·06
t	7·9	·252	— 0·51	7	— 18	— 0·73							

The Königsberg Declinations being referred to the *Berliner Jahrbuch* system, and the N_3 to the system of the Southern Zone stars, which differs from the former by $+0''\cdot50 - 0''\cdot02\,\delta^\circ$, a reduction for the mean Declination of the *Victoria* stars $= +0''\cdot60$ was added to the Königsberg Declinations before this comparison. Then the mean difference is—

for	9 stars,	aver. mag.	6·04	— 0·25,	weight 55
„	12 „	„	7·72	+ 0·06	„ 31
„	11 „	„	8·10	+ 0·09	„ 24
„	8 „	„	8·40	+ 0·71	„ 23

Digitized by Google

All the nine brightest stars deviate to the South, and in the last group seven out of eight to the North ; the progression appears regular, and the errors of the Königsberg Declinations can be sufficiently represented by the formula $-0''{\cdot}35 + 0''{\cdot}30\,(M-6{\cdot}0)$, which however cannot be extended beyond the limits of magnitude 5·5 and 8·5. The weights given to the four means result from weights given to the different places varying from 1 (for one observation) to 5 for the stars observed seven or eight times, and 10 for the reference stars.

In Right Ascension, a rapid progression with magnitude is at once apparent from the numbers Kbg.$-N_3$ and the tabular magnitudes, which are those ultimately adopted. Applying a correction $-0^s{\cdot}090\,(M-5{\cdot}0)$ however there remains a marked progression with time, the consecutive means being those given first in the following table, and reduced to the quantities given next by applying a reduction to $19^h\,44^m$, assuming the hourly variation to be $+0^s{\cdot}03$:—

for 5	stars,	A–c	$+0^s{\cdot}005$; red	$+0^s{\cdot}020$
6	„	d–i	$-0{\cdot}003$	$+0{\cdot}005$
6	„	k–p	$-0{\cdot}024$	$-0{\cdot}018$
6	„	q–v	$+0{\cdot}006$	$+0{\cdot}006$
7	„	w–γ	$+0{\cdot}023$	$+0{\cdot}019$
7	„	δ–κ	$+0{\cdot}043$	$+0{\cdot}036$
4	„	λ–D	$+0{\cdot}021$	$+0{\cdot}007$

The clock connected with the chronograph is situated within the Transit-room, and not protected against the variations of temperature. But as it has a gridiron pendulum which on the whole has been found to produce a satisfactory compensation, it is not probable that the true hourly clock-rate during the observations gained $0^s{\cdot}03$ over the day-to-day rate with which the observations were reduced. The necessity for the correction, however, cannot be overlooked, and it was accordingly applied as above. This done, the results, treated by the method of least squares, gave Kbg.$-N_3$ reduced to $19^h\,44^m = +0^s{\cdot}0993 + 0^s{\cdot}0899\,(M-6{\cdot}0)$. After application of these corrections in Right Ascension, and the above-mentioned corrections in Declination, the comparison between the Königsberg observations with N_3 gave the values of Kbg. (corrected) $-N_3$, which are printed in the above table in the columns marked "Residuals." The mean error for weight 1 then comes out $=\pm0^s{\cdot}064$, and the magnitude co-efficient $0^s{\cdot}0899$ has the mean error $\pm0^s{\cdot}0052$. It could not be expected that with such an enormous co-efficient a linear expression would represent very closely the true law of the variation over a range of full three magnitudes, but the material is not sufficient for a further development, and that simple expression leaves only one error outstanding, which is decidedly greater than might be expected, viz.: $+0^s{\cdot}041$ for star **B**, which is greater than the accidental mean error of one observation of the star, although the star was observed 23 times. Perhaps the star is fainter by some tenths of a magnitude than has been assumed, though the B.D. magnitude 5·0 was already reduced from other authorities to $5^m{\cdot}3$.

Digitized by Google

The large magnitude equation of the observer is shown also in the observations of the *Berliner Jahrbuch* stars, the clock-correction from *a* Lyræ being always very nearly $+0^{s}\cdot20$ different, or, allowing for an hourly acceleration of $0^{s}\cdot03$, $+0^{s}\cdot16$ different from that furnished by the five other stars of mean magnitude 3·7.

LEIDEN.

Observations were made and reduced in the manner already explained for the *Iris* stars, with the exception that the instrument was always in the same position (clamp W.), and that only a few of the observations for which the letter W is appended to the date were made by the second assistant. Circle A was read throughout, except August 30, when circle B was read.

The Right Ascensions as communicated by Professor Bakhuyzen and tabulated below are already corrected for personality depending on magnitude, with the same co-efficient as that employed for the *Iris* stars and with the *Bonner Durchmusterung* magnitudes as argument. The corrections to reduce the values made use of to the finally adopted magnitudes are given below with the means, p. 523. The Declinations as communicated include the reductions to the mean of both circles and of both positions of the instrument.

Observations of Reference Stars. Mean Places, Eq. 1889·0.

1889	A		B		C		D		Mean Deviation		Adopted Reduction	
	$19^{h}\ 6^{m}$	$-8°\ 7'$	$19^{h}\ 14^{m}$	$-5°\ 37'$	$20^{h}\ 14^{m}$	$-6°\ 42'$	$20^{h}\ 19^{m}$	$-3°\ 9'$				
	s	"	s	"	s	"	s	"	s	"	s	"
June 16	39·423	27·82	37·410	19·92	31·573	28·91	...	...	+0·025	+0·14	−0·023	−0·14
18	·490	28·36	·324	19·94	...	...	55·068	35·99	+0·001	+0·13	0·000	−0·12
19	·429	27·91	·363	21·13	·563	28·80	·124	35·75	+0·009	−0·07	−0·008	+0·07
20	·429	27·58	·345	20·49	·562	28·23	·115	36·43	+0·002	+0·14	−0·001	−0·15
23	·439	28·01	·358	21·21	·580	28·80	·116	35·83	+0·012	−0·14	−0·012	+0·13
25	·370	27·29	·312	20·56	·540	28·38	·102	36·12	−0·032	+0·24	+0·030	−0·24
26	·413	27·37	·356	21·38	·544	28·15	·093	36·47	−0·009	−0·02	+0·010	+0·01
July 3	·433	27·87	·338	21·11	·597	29·35	·181	36·37	+0·026	−0·35	−0·026	+0·34
4	·427	27·12	·331	20·69	·583	28·39	·109	37·22	+0·002	−0·03	−0·001	+0·03
5	·398	27·34	·323	21·29	·559	28·30	·084	35·84	−0·020	+0·13	+0·020	−0·14
29	·421	26·50	·393	19·90	...	...	...	...	+0·024	+1·05	−0·029	−0·29
30w	·456	28·02	·344	21·09	·535	28·30	...	...	+0·002	−0·11	+0·001	+0·11
31	·424	27·84	·340	20·90	·554	28·82	·092	36·41	−0·008	−0·17	+0·009	+0·16
Aug. 2w	·406	27·27	·333	21·05	...	...	...	...	−0·014	+0·09	+0·017	−0·05
30w	·357	27·95	·182	21·18	·485	29·48	·053	36·27	−0·092	−0·39	+0·092	+0·39
Mean ...	39·426	27·66	37·342	20·84	31·563	28·62	55·113	36·20	...	...	...	...

Digitized by Google

The references to the fundamental stars observed are remarkably consistent, the average daily deviation, with the exception of one day for each co-ordinate, being only $0^s{\cdot}013$ and $0''{\cdot}15$. The large deviation of the last day's Right Ascensions, seven times as large as the average deviation, is confirmed by the nine comparison stars observed on the same day, all of which give the Right Ascension much too small — in the mean $0^s{\cdot}108$. The large deviation in Declination July 29 on the contrary seems to come from an accidental error in the observation of the two reference stars which only were observed on that day; combining them with the seven comparison stars observed on the day in question, the mean deviation is only $+0''{\cdot}29$.

Increasing, therefore, the Right Ascensions of the last day by $0^s{\cdot}092$, and applying the reductions furnished by a first approximation to the Right Ascensions for those days on which not the whole of the four reference stars were observed, means were taken; by comparison with these means the day corrections were determined for every day, and after applying them the means given in the last line of the preceding table were obtained. For Declination, the observations were reduced with day corrections from comparison with the means from those ten days on which all of the four stars were observed, and the new means then found corrected by $+0''{\cdot}06$ to reduce them to the mean of all the 15 days. In this way the numbers of the last line of the table were found.

Instead of the mean daily deviations from these means which are given with the table, the values previously used in the Leiden reductions, and the day corrections given in the last column, were retained for the comparison stars, the difference being practically insensible in all cases. Only for July 29 the adopted value of $\Delta\alpha$ is not that used at Leiden, as it was preferred to determine the correction for both co-ordinates from all the stars observed on this day.

Observations of Comparison Stars, not corrected for Daily Deviation.

1889	α	δ (south)	1889	α	δ (south)	1889	α	δ (south)	1889	α	δ (south)	1889	α	δ (south)
a	s	″	b	s	″	d	s	″	e	s	″	f	s	″
June 16	25·255	20·85	June 18	2·519	1·43	June 16	17·984	13·44	June 23	40·357	3·44	June 19	50·499	49·27
19	·238	20·87	20	·511	1·26	26	·944	13·77	July 4	·313	3·02	25	·539	49·18
23	·205	21·05	July 31	·532	0·83	July 3	·962	13·35	29	·347	2·44	July 5	·529	49·22
26	·259	21·96	c			5	·939	13·26	30w	·342	2·21	Aug. 2w	·569	49·46
July 3	·232	21·34	June 19	6·259	6·86				31	·353	2·89	30w	·387	48·80
5	·217	21·80	25	·259	6·75									
30w	·194	20·94	Aug. 30w	·161	7·02									

Digitized by Google

1889	α	δ (south
g	s	"
June 16	37·688	24·06
23	·651	23·37
26	·680	24·93
July 3	·661	23·84
4	·654	23·80
h		
June 18	20·776	6·17
July 30w	·746	4·84
31	·787	5·75
i		
June 20	41·152	2·86
July 29	·208	3·38
k		
June 23	53·470	44·22
25	·409	43·83
Aug. 30w	·319	43·82
l		
June 16	22·207	19·28
July 5	·149	19·75
m		
June 18	54·006	40·57
19	·013	40·77
26	·007	40·31
July 3	·061	40·36
4	·029	40·42
n		
June 20	26·907	7·42
25	·888	7·49
Aug. 30w	·786	8·93

1889	α	δ (south)
o	s	"
June 16	53·553	21·54
July 4	·534	21·23
p		
June 18	56·030	49·15
19	·045	49·40
23	·043	50·42
26	·060	50·70
July 3	·072	50·45
5	·019	49·23
31	·000	50·11
q		
June 16	23·720	22·74
18	·701	22·62
19	·742	23·21
26	·704	23·73
July 3	·775	23·53
5	·686	22·93
30w	·648	22·93
31	·723	22·64
r		
June 20	59·514	0·53
25	·533	1·37
Aug. 30w	·454	1·95
s		
June 23	53·325	23·28
July 4	·315	23·14
29	·373	23·61

1889	α	δ (south)
t	s	"
June 16	4·543	19·26
18	·500	19·13
19	·485	19·14
26	·447	18·87
July 3	·562	19·41
5	·492	19·28
u		
June 25	43·849	25·43
July 30w	·827	25·54
v		
June 20	56·200	27·23
23	·208	28·05
July 4	·239	27·72
29	·228	28·30
Aug. 30w	·161	26·70
w		
June 16	27·245	32·39
19	·225	32·41
25	·230	33·14
26	·205	32·93
July 3	·255	32·71
30w	·204	33·24
31	·168	33·38
x		
June 18	22·453	60·67
20	·431	59·88
23	·464	60·71
July 4	·436	60·57
5	·381	60·46
29	·495	59·22

1889	α	δ (south)
y	s	"
June 16	25·970	54·01
19	·897	55·25
26	·896	54·46
July 3	·914	55·07
Aug. 30w	·832	53·70
z		
June 18	3·575	59·35
25	·552	58·92
July 29	·562	59·15
a		
June 20	18·169	56·14
β		
June 23	38·094	17·99
July 31	·038	16·43
γ		
June 16	57·363	52·78
18	·401	52·44
Aug. 30w	·240	53·47
ϵ		
June 19	39·743	48·95
25	·792	49·73
26	·770	49·21
July 29	·858	47·89
ζ	s	"
June 20	4·838	14·59
July 4	·831	14·90
η		
June 16	21·834	28·29
18	·835	28·44
θ		
July 3	23·860	58·15
29	...	58·48
30w	·847	58·36
31	·835	57·79
ι		
July 4	44·869	5·32
Aug. 30w	·769	5·27
κ		
July 5	3·749	59·42
λ		
June 26	45·855	33·74
July 3	·893	34·04
30w	·808	33·20
31	·851	32·91
μ		
June 16	8·956	12·86
18	·985	13·36
19	·936	13·27
20	·991	13·60
23	·949	13·57
25	·928	13·11
July 5	·972	13·28
30w	9·044	13·23

Digitized by Google

The means of the reduced observations and the corrections further required for the Right Ascensions for error of assumed magnitude, and another correction, depending on time, which is subsequently discussed, are contained in the following table :—

Star	R.A. 1889·0	Correction Mag.	Correction Time	Declination 1889·0	No. obs.	Star	R.A. 1889·0	Correction Mag.	Correction Time	Declination 1889·0	No. obs.
	h m s	(0s·001)		° ′ ″			h m s	(0s·001)		° ′ ″	
A	19 6 39·426	— 2	+21	−8 7 27·67	15	u	19 43 43·854	0	— 2	−4 48 25·55	2
B	14 37·342	— 5	+16	5 37 20·84	15	v	44 56·217	— 5	— 3	4 58 27·58	5
a	21 25·223	— 3	+11	5 57 21·20	7	w	47 27·218	— 6	— 5	4 51 32·84	7
b	23 2·523	+ 3	+11	6 24 1·21	3	x	48 22·440	— 3	— 5	5 20 0·34	6
c	24 6·264	0	+10	5 9 6·80	3	y	51 25·911	+ 3	— 7	4 58 54·36	5
d	25 17·953	0	+ 9	5 54 13·44	4	z	52 3·563	0	— 7	5 28 59·36	3
e	25 40·336	— 3	+ 9	5 21 2·77	5	α	52 18·168	+ 7	— 8	6 38 56·29	1
f	27 50·535	+ 2	+ 8	4 58 49·18	5	β	52 38·064	+ 7	— 8	4 39 17·06	2
g	28 37·656	0	+ 7	4 41 23·93	5	γ	54 57·358	+ 9	— 9	4 36 52·85	3
h	29 20·773	0	+ 7	4 33 5·54	3	δ	55 39·792	— 3	—10	6 40 49·06	4
i	30 41·165	+ 3	+ 6	5 1 3·34	2	ε	56 17·721	— 8	—10	5 17 49·20	3
k	30 53·436	— 9	+ 6	4 32 43·86	3	ζ	57 4·834	+ 3	—11	8 0 14·80	2
l	31 22·176	0	+ 5	3 43 19·65	2	η	57 21·823	+ 4	—11	4 56 28·49	2
m	31 54·018	—11	+ 5	4 53 40·42	5	θ	59 23·842	+ 2	—12	6 53 58·12	3, 4
n	34 26·901	+ 4	+ 3	5 42 7·95	3	ι	20 0 44·865	+ 3	—13	4 44 5·09	2
o	34 53·532	— 2	+ 3	4 17 21·44	2	κ	1 3·769	— 6	—13	8 29 59·56	1
p	35 56·037	+ 4	+ 3	4 32 49·86	7	λ	2 45·850	0	—14	7 20 33·32	4
q	39 23·710	— 3	+ 1	4 47 23·01	8	μ	5 8·976	0	—16	9 10 13·34	8
r	40 59·541	— 2	— 1	3 56 1·28	3	C	14 31·563	— 3	—21	6 42 28·62	12
s	41 53·324	— 3	— 1	5 30 23·39	3	D	19 55·113	+ 4	—25	3 9 36·20	11
t	43 4·500	— 3	— 2	4 46 19·18	6						

These means make the sum of the squares of the errors of the reduced observations and the corresponding mean error of an observation—

for the reference stars : in R.A. 0·025353 ; in Dec. 6·8510 ; 53 observations ; 4 stars ; mean error $\pm 0^{s}\cdot 0269$ $\pm 0''\cdot 442$

„ comparison „ „ 0·073870 ; „ 21·2175 ; 140, 141 observations ; 35 stars ; „ $\pm 0^{s}\cdot 0267$ $\pm 0''\cdot 450$

The brighter and the fainter stars appear, therefore, to have been observed with an equal and very satisfactory accuracy, although sensibly inferior to that reached by the same observers in the *Iris* series. The resulting mean Right Ascensions also want much of the general harmony with the Berlin results which, but for a small constant difference, was so excellent a feature in the *Iris* series, and which should be expected between two so accurate series, both being referred to the same system and both having been freed from magnitude equation.

Digitized by Google

The following is the comparison, including at once that of the Declinations :—

Star	Mag.	Berlin — Leiden		Residuals		Weight	Star	Mag.	Berlin — Leiden		Residuals		Weight
		$\Delta\alpha$	$\Delta\delta$	$\Delta\alpha$	$\Delta\delta$				$\Delta\alpha$	$\Delta\delta$	$\Delta\alpha$	$\Delta\delta$	
		s	″	s	″				s	″	s	″	
A	5·8	+0·013	+0·30	+0·008	−0·24	7	u	8·0	−0·050	+0·44	+0·001	−0·10	2
B	5·3	+ 8·	+0·57	+ 1	+ 3	7	v	6·7	− 31	+0·60	+ 2	+ 6	4
a	7·8	− 15	+0·38	+ 20	− 16	4	w	8·2	− 37	+0·51	+ 20	− 3	4
b	8·2	− 31	+0·55	+ 10	+ 1	3	x	8·1	− 67	+0·29	− 11	− 25	4
c	8·5	− 52	+0·61	− 5	+ 7	3	y	8·1	− 59	+0·39	− 1	− 15	4
d	8·4	− 25	+1·17	+ 21	+ 63	3	z	8·5	− 87	+0·56	− 23	+ 2	3
e	8·3	− 41	+0·32	+ 4	− 22	4	α	8·0	− 69	+0·71	− 12	+ 17	1
f	7·5	− 38	+0·34	− 4	− 20	4	β	8·0	− 61	+0·38	− 4	− 16	2
g	8·5	− 62	+0·61	− 12	+ 7	4	γ	7·4	− 54	+0·62	− 5	+ 8	3
h	7·8	− 52	−0·16	− 13	− 70	3	δ	8·3	− 49	−0·01	+ 15	− 55	3
i	7·7	− 28	+0·86	+ 11	+ 32	2	ϵ	6·6	− 50	+0·65	− 12	+ 11	3
k	7·9	− 61	+0·22	− 19	− 32	3	ζ	8·0	− 69	+0·64	− 9	+ 10	2
l	8·0	− 81	+0·92	− 37	+ 38	2	η	8·1	− 110	+0·56	− 48	+ 2	2
m	5·7	− 9	+0·39	+ 1	− 15	4	θ	8·4	− 60	+0·61	+ 7	+ 7	3
n	6·6	− 37	+0·36	− 12	− 18	3	ι	7·0	− 16·	+1·14	+ 27	+ 60	2
o	7·6	− 32	+0·15	+ 8	− 39	2	κ	7·5	− 76	+0·65	− 21	+ 11	1
p	7·6	− 28	+0·53	+ 12	− 1	4	λ	8·1	− 53	+0·26	+ 12	− 28	3
q	8·4	− 40·	+0·92	+ 14	+ 38	5	μ	6·5	− 62	+0·57	+ 11	+ 3	5
r	7·9	− 53	+0·57	− 4	+ 3	3	C	6·4	− 49	+0·15·	− 3	− 38·	6
s	7·9	− 40	+0·78	+ 9	+ 24	3	D	6·1	− 46	+0·90	0	+ 36	6
t	7·9	− 42	+0·99	+ 8	+ 45	4							

Nothing is known about the system of the Declinations given by the Leiden circle in its present condition ; the difference of $-0''\cdot54$ from the system employed for the Berlin reductions is sensibly constant throughout the zone, and leaves the residuals shown in the table, the average amount of which, without regard to the assigned weights which depend only upon the number of observations in the Leiden series, is only $0''\cdot211$, giving the mean error of a difference B. − L. $= \pm 0''\cdot268$.

The large and quite unexpected difference between the Right Ascensions B. and L. shows that the magnitude equation either of the Berlin or of the Leiden observers, if not both of them, had considerably changed since its determination was made, and since the *Iris* observations, in which only a small part of such a change was already perceptible. It only agrees with the fact of a large mean difference existing between the two series, that this difference very markedly varies with the magnitude of the stars. But besides, there is a progression with time, in the same sense, and nearly of the same amount, or rather still greater, than found in the Königsberg observations.

Digitized by Google

Reducing the differences B. – L. to $19^h\,40^m$ with an hourly variation of $-0^s\cdot037$, and grouping the reduced values, the means become—

from	9	stars	5·3	m. to	6·7	m.. mean m.	6·10	: — 0·023 ;	observations,	45
„	13	„	7·0	„	7·9	„	7·68	— 0·040	„	38
„	11	„	8·0	„	8·2	„	8·09	— 0·054	„	29
„	8	„	8·3	„	8·5	„	8·41	— 0·053	„	28

showing a variation of $-0^s\cdot015$ for one magnitude, and from the differences B. – L. reduced, with this variation, to $8^m\cdot0$, the means for four consecutive groups become—

	s	h	m		
from the first 8 stars :	— 0·030	for 19	17 ;	observations,	35
„ foll. 11 „	— 0·048	„ 19	24 .	„	35
„ „ 11 „	— 0·054	„ 19	48	„	34
„ last 11 „	— 0·064	„ 20	11	„	36

well accordant with an hourly variation of $0^s\cdot037$, which was found from the first and last thirds of the stars only. Putting, therefore, the difference Berlin – Leiden $= -0^s\cdot049 - 0^s\cdot015\,(M - 8\cdot0) - 0^s\cdot037(t - 19^h\,40^m)$, the residuals $\Delta\alpha$ given in the above table remain, amounting on the average to $0^s\cdot0116$, whence the mean error of a difference, supposing all of them to be of equal weight, would be only $\pm 0^s\cdot0146$.

Both of the systematic errors which become apparent in the comparison of the two series are probably, for the greater part at least, on the Leiden side. It is more probable that the very considerable equation of the Leiden observer B — to whom six-sevenths of this series are due—has changed, than that the change occurred in the very small equation of Dr. Küstner ; and the reductions probably were made at Leiden with the daily rate, while at Berlin the rate during the observation was determined and employed. Into the latter determination there would enter the error of the Right Ascensions of the clock stars, but it is much more probable that the Leiden clock gained about $0^s\cdot04$ hourly during the night over the mean daily rate at the season of the year when the *Victoria* stars were observed, than that the places of the fundamental stars should be affected by such errors. Moreover, it is fully confirmed, by comparison with the normals, that the Leiden Right Ascensions actually increase during the observations of the zone.*

LEIPZIG.

Observations were made in the same manner as explained for *Iris*. The reference stars were regularly observed, and for these as well as for the clock-stars and for the planet, the transits were taken generally over 15 wires, and two pointings made for

* The apparent change of clock rate may be possibly explained to some extent by a change in the armature time of the chronograph, if the batteries employed are liable to polarization.—D.G.

Digitized by Google

Declination, while for the comparison stars, generally only seven or eight, sometimes a lesser number of wires were observed, and one pointing only made in Declination. A power of 120 was used till July 10, and 190 after that date. In the reductions the places were referred to the system of *Astronomische Nachrichten* 2890–1 ; all the zero stars used, with exception of a^1 Capricorni, being taken from that list. The following are the separate results for 1889·0 as communicated by Professor Bruns :—

1889	A		B		C		D		Position of Instrument	Images		Remarks.
	$19^h\ 6^m$	$-8°\ 7'$	$19^h\ 14^m$	$-5°\ 37'$	$20^h\ 14^m$	$-6°\ 42'$	$20^h\ 19^m$	$-3°\ 9'$		Stead.	Prec.	
	s	′	s	′	s	′	s	′				
June 2	...	...	37·38	21·00	31·57	27·69	...	...	W	2-3	2	
5	39·45	26·31	·27	19·66	·52	28·29	55·10	35·87	E	2-3	3	
6	...	...	·31	20·34	·55	28·22	·05	36·25	W	2	2	
7	·46	26·48	·30	19·46	·57	28·62	·06	35·13	W	2	2	
8	·49	27·15	...	...	·58	28·43	·04	35·32	E	3	3-2	
17	·44	27·65	·33	19·97	·55	27·67	·07	35·70	W	3	3	
18	·43	26·72	·37	20·67	·52	28·62	54·99	35·48	W	3	3	
20	·43	27·27	·36	20·50	·52	29·31	55·12	34·98	E	2	2	
22	·42	27·26	·41	20·74	·49	29·36	·08	36·08	E	2	2	
23	·48	27·28	·32	20·16	·54	28·83	·11	35·39	E	3	3	B through clouds.
25	·48	27·35	·30	19·87	·53	28·52	·04	36·37	E	3	2	
26	·49	27·15	·33	20·71	·51	28·31	·11	34·93	W	2	2	
27	·45	27·35	·33	20·24	·54	28·79	·08	36·08	W	2	2	
28	·44	27·31	·35	19·74	·54	27·52	·10	35·27	W	2	2	
30	·47	27·40	·34	20·75	·55	28·47	·06	35·64	W	2	2	D through clouds.
July 2	·44	27·82	·39	20·31	·53	28·52	·02	36·07	W	3-4	3-4	before 20^h, afterwards 2.
5	...	28·56	·31	20·11	·56	28·66	·15	34·84	W	2	2	Observed through clouds.
6	·44	27·09	·35	20·75	·60	27·16	·06	35·74	W	3	2	
7	...	...	...	...	·55	28·50	·07	35·68	W	2	2	
9	·45	27·49	·36	20·14	·56	28·24	·14	35·55	W	1-2	1-2	
10	·43	27·31	·33	20·55	·47	28·32	·05	35·19	W	2-3	2-3	
11	·45	27·59	·35	21·37	·57	28·77	·08	36·10	W	2	2	
15	·50	27·93	·34	20·34	·52	28·98	·18	35·31	W	3-2	3-2	
24	·48	27·79	·39	20·21	·51	28·12	·11	35·49	E	3	3	C and D through clouds.
28	·48	28·13	·34	20·76	...	...	·06	35·96	E	3	3	D through clouds.
30	...	...	·30	19·88	·53	28·64	·07	35·64	E	3	3	
31	·45	27·31	·34	20·89	·54	28·72	·06	35·22	E	3	3	
Aug. 1	·47	27·27	·36	20·36	·60	29·00	·12	35·30	E	3	3	
8	·47	27·52	·34	20·61	·58	27·51	·10	35·59	W	3	3	C and D through clouds.
18	·47	27·26	·37	19·92	·55	28·44	·06	36·09	E	2	2	Stars rather faint.
25	·44	27·11	·30	20·18	·49	28·07	·08	35·61	W	3	3	
27	·47	27·45	...	...	...	...	...	...	W	3	2-3	Clouded over.
29	·45	27·10	·34	21·66	·60	27·76	·15	35·70	W	2	2	
30	·45	27·74	·33	20·76	·54	28·27	·05	35·15	E	2-1	2-1	
31	·44	27·60	...	...	...	...	...	...	W	2	2	
Sept. 2	·48	27·37	...	...	...	...	...	...	W	2	2	

Digitized by Google

1889	Pos.	α	δ (south)
a		s	′
June 2	W	25·32	21·45
5	E	·28	20·18
6	W	·27	20·41
8	E	·25	19·10
b			
June 2	W	2·63	1·17
5	E	·47	0·28
6	W	·50	0·55
8	E	·43	0·11
c			
June 5	E	6·18	5·08
6	W	·22	5·23
7	W	·17	4·36
8	E	·29	5·68
17	W	·27	6·12
20	E	·29	5·25
d			
June 5	E	17·87	11·91
7	W	18·04	11·98
8	E	17·92	11·62
17	W	·92	11·72
18	W	·84	11·99
20	E	18·02	12·84
22	E	·03	13·12
23	E	·00	11·30
26	W	·02	12·79
27	W	17·95	12·63
e			′
June 5	E	40·38	21 2·63
6	W	·39	0·57
7	W	·28	0·99
8	E	·34	2·70
17	W	·46	20 59·21
20	E	·44	21 1·82
23	E	·37	1·56
25	E	·32	2·84
26	W	·27	1·74
27	W	·27	1·99

1889	Pos.	α	δ (south)
f		s	″
June 5	E	50·54	48·07
6	W	·46	49·92
7	W	·52	48·32
8	E	·48	48·30
17	W	·61	48·91
20	E	·59	49·57
22	E	·60	49·75
23	E	·54	49·21
25	E	·52	49·39
26	W	·49	48·84
27	W	·47	49·17
Aug. 8	W	·56	49·56
g			
June 2	W	37·76	23·02
7	W	·57	23·70
8	E	·70	21·46
20	E	·69	23·51
Aug. 25	W	·67	22·55
h			
June 5	E	20·77	6·38
7	W	·70	5·18
8	E	·80	5·28
17	W	·85	4·32
i			
June 2	W	41·30	2·47
5	E	·07	1·91
6	W	·12	3·67
8	E	·16	2·92
17	W	·21	2·23
20	E	·16	2·65
k			
June 7	W	53·41	43·15
18	W	·47	43·83
20	E	·44	42·56
23	E	·40	43·02
26	W	·43	44·51
27	W	·45	43·63
July 31	E	·40	42·80
Aug. 30	E	·44	42·79

1889	Pos.	α	δ (south)
l		s	″
June 2	W	22·22	19·22
5	E	·19	19·04
18	W	·04	19·87
Aug. 30	E	·14	18·96
m			
June 6	W	53·93	39·95
8	E	54·09	39·81
17	W	·04	39·47
18	W	·01	40·23
20	E	·06	39·54
22	E	53·99	40·91
23	E	54·00	39·40
26	W	·04	40·36
n			
June 2	W	26·92	7·38
5	E	·92	8·47
8	E	·95	7·27
17	W	27·01	6·94
20	E	26·93	7·45
o			
June 2	W	53·57	21·22
5	E	·45	20·32
6	W	·51	20·30
8	E	·56	19·55
p			
June 5	E	56·08	48·35
6	W	55·99	49·39
7	W	56·01	47·91
8	E	·10	47·46
17	W	·09	48·40
18	W	55·98	50·07
20	E	56·09	49·53
22	E	·07	49·26
23	E	·02	48·23
26	W	·00	50·05
27	W	55·98	49·60
30	W	56·01	48·85
July 31	E	·07	49·64
Aug. 30	E	·08	49·51

Digitized by Google

1889	Pos.	α	δ (south)
q		s	′
June 2	W	23·65	22·80
5	E	·72	23·40
6	W	·68	23·26
7	W	·66	21·26
8	E	·70	20·65
20	E	·74	22·49
23	E	·69	21·71
26	W	·71	22·66
r			′
June 2	W	59·61	56 0·41
5	E	·52	0·66
6	W	·43	0·18
8	E	·55	55 59·50
s			
June 2	W	53·36	22·62
5	E	·36	21·66
6	W	·35	22·75
8	E	·36	22·18
t			
June 2	W	4·54	18·36
5	E	·52	17·82
6	W	·53	18·83
7	W	·47	15·90
8	E	·58	17·99
17	W	·56	17·97
18	W	·47	18·61
20	E	·55	18·58
22	E	·50	18·52
23	E	·48	18·16
30	W	·47	18·58
July 31	E	·61	18·47
Aug. 25	W	·50	17·69
30	E	·52	18·71
u			
June 5	E	43·86	24·80
6	W	·79	25·34
7	W	·82	24·87
8	E	·85	23·51

1889	Pos.	α	δ (south)
v		s	′
June 5	E	56·19	27·01
7	W	·25	26·78
8	E	·24	26·30
17	W	·24	27·19
18	W	·25	26·88
20	E	·20	27·01
w			
June 5	E	27·26	32·32
6	W	·20	32·51
7	W	·13	30·83
8	E	·21	32·08
17	W	·29	31·54
20	E	·26	32·61
23	E	·33	31·73
26	W	·22	31·57
x			
June 2	W	22·43	59·77
5	E	·37	59·62
6	W	·34	59·63
7	W	·42	58·67
8	E	·45	58·42
20	E	·50	60·46
23	E	·43	59·48
26	W	·32	58·45
y			
June 2	W	25·92	53·70
5	E	·94	53·53
6	W	·90	53·53
7	W	·93	53·74
8	E	26·00	53·83
20	E	25·92	54·22
23	E	·91	54·15
26	W	·96	53·85
z			
June 2	W	3·56	58·84
5	E	·53	58·71
6	W	·37	59·44
7	W	·47	58·87
20	E	·63	59·14
22	E	·54	58·63
23	E	·68	57·84
26	W	·55	57·97
July 6	W	·48	58·33

1889	Pos.	α	δ (south)
α		s	′
June 6	W	18·03	55·60
7	W	·16	55·45
20	E	·18	56·23
25	E	·10	54·43
β			
June 5	E	38·04	16·18
8	E	·10	14·59
17	W	·10	15·95
γ			
June 2	W	57·39	52·81
5	E	·43	51·28
6	W	·35	51·76
8	E	·38	51·39
δ			
June 2	W	39·76	48·20
5	E	·79	47·98
6	W	·68	49·19
8	E	·77	48·40
18	W	·84	48·67
20	E	·74	49·13
ϵ			
June 5	E	17·71	48·96
6	W	·64	48·20
7	W	·66	48·58
8	E	·70	48·42
18	W	·59	47·56
20	E	·68	49·51
21	E	·64	49·01
Aug. 25	W	·71	48·41
ζ			
June 2	W	4·84	13·55
7	W	·78	13·94
18	W	·73	13·82
20	E	·89	14·61
22	E	·82	14·78
23	E	·87	14·31

Digitized by Google

1889	Pos.	α	δ (south)	1889	Pos.	α	δ (south)	1889	Pos.	α	δ (south)
η		s	"	ι'		s	"	λ—*cont.*		s	"
June 7	W	21·67	27·48	June 6	W	46·69	55·71	July 2	W	45·86	32·89
8	E	·81	27·66	7	W	·70	55·18	24	E	·82	33·23
17	W	·67	27·25	8	E	·66	55·34	31	E	·93	32·42
July 24	E	·73	28·01	17	W	·70	54·42	Aug. 18	E	·82	33·62
θ				25	E	·79	56·02	μ			
June 2	W	23·78	57·89	28	W	·80	54·50	June 6	W	9·04	13·19
6	W	·73	58·46	Aug. 18	E	·73	55·59	7	W	8·94	12·37
8	E	·80	56·89	κ				8	E	·96	11·94
18	W	·79	57·48	June 7	W	3·73	57·83	17	W	·87	10·96
July 24	E	·87	56·39	26	W	·75	58·66	18	W	·89	12·12
31	E	·91	57·34	27	W	·70	59·19	20	E	·99	12·10
ι				July 24	E	·72	58·57	21	E	9·01	11·48
June 2	W	44·94	5·14	31	E	·81	58·78	22	E	8·96	12·79
6	W	·83	5·20	Aug. 30	E	·69	58·44	23	E	·96	12·18
8	E	·94	4·77	λ				25	E	·93	12·15
8	W	·82	3·15	June 20	E	45·91	32·56	27	W	·98	13·05
July 24	E	·92	4·95	25	E	·87	33·16	July 24	E	·93	11·91
31	E	·92	4·48	27	W	·85	32·46	Aug. 25	W	·96	12·97
				30	W	·88	32·36	29	W	·92	11·92

Separate means were taken from these places for each of the two positions of the instrument, from which the mean difference W.—E. was found = $-0^{s}\cdot017$ for Right Ascension, with a weight of 94 observations, while the mean of the differences in Declination was $0''\cdot00$. The simple means $\frac{1}{2}$(E. + W.) however were used throughout to determine the day corrections, which were found as follows, giving double weight to the observations of the reference stars :—

1889	$\Delta\alpha$	$\Delta\delta$	No. stars	1889	$\Delta\alpha$	$\Delta\delta$	No. stars	1889	$\Delta\alpha$	$\Delta\delta$	No. stars
	s	"			s	"			s	"	
June 2	— 0·03	+ 0·14	21	June 27	+ 0·02	+ 0·26	12	July 30	+ 0·01	— 0·04	(3)
5	+ 0·01	— 0·16	30	28	— 0·01	— 0·52	5	31	— 0·02	+ 0·05	11
6	+ 0·04	+ 0·32	30	30	+ 0·01	+ 0·07	7	Aug. 1	— 0·03	+ 0·03	4
7	+ 0·02	— 0·42	27	July 2	+ 0·01	+ 0·21	5	8	— 0·02	— 0·07	5
8	— 0·01	— 0·33	34	5	— 0·01	+ 0·04	(3, 4)	18	0·00	+ 0·10	6
17	— 0·01	— 0·38	20	6	0·00	— 0·34	5	25	0·00	— 0·03	8
18	+ 0·04	— 0·03	17	7	0·00	+ 0·05	(2)	27	0·00	+ 0·02	(1)
20	— 0·03	+ 0·25	27	9	— 0·02	— 0·17	4	29	— 0·02	+ 0·06	5
21	0·00	— 0·06	(2)	10	+ 0·04	— 0·19	4	30	+ 0·01	+ 0·03	9
22	— 0·00	+ 0·46	12	11	— 0·01	+ 0·51	4	31	0·00	+ 0·04	(1)
23	— 0·01	— 0·17	18	15	— 0·03	+ 0·19	4	Sept. 2	0·00	0·00	(1)
25	+ 0·01	+ 0·22	10	24	— 0·01	— 0·03	10				
26	+ 0·01	+ 0·06	16	28	0·00	+ 0·33	(3)				

Digitized by Google

For some days, when only a few of the reference or comparison stars had been observed, and their total number is given in brackets, the values given in the table were derived by also taking account of the zero stars.

These corrections, which are of little importance, the average amount being only $0^{s}\cdot014$ and $0''\cdot17$, agree closely with those afterwards derived from a comparison with the normals, and were used to form the following simple means taken from the reduced observations, as the day correction comprises the reduction to $\frac{1}{2}$(E. + W.) :—

Star	R.A. 1889·0	Dec. 1889·0	No. obs.	II — I	Star	R.A. 1889·0	Dec. 1889·0	No. obs.	II — I
	h m s	° ′ ″				h m s	° ′ ″		
A	19 6 39·456	— 8 7 27·40	31, 32	— 3 — 2	u	19 43 43·845	— 4 48 24·78	4	+15 —16
B	14 37·339	5 37 20·39	31	— 2 + 2	v	44 56·232	4 58 27·04	6	+ 4 —18
a	21 25·282	5 57 20·29	4	+ 2 0	w	47 27·240	4 51 32·00	8	+ 2 —10
b	23 2·510	6 24 0·53	4	+ 3 0	x	48 22·408	5 19 59·35	8	+ 1 — 4
c	24 6·240	5 9 5·41	6	+ 4 —12	y	51 25·936	4 58 53·87	8	+ 2 — 5
d	25 17·964	5 54 12·24	10	+ 3 — 5	z	52 3·536	5 28 58·63	9	+ 1 + 1
e	25 40·357	5 21 1·74	10	+ 5 — 4	α	52 18·127	6 38 55·28	4	+10 +14
f	27 50·534	4 58 49·08	12	+ 2 0	β	52 38·077	4 39 15·86	3	0 —29
g	28 37·668	4 41 22·93	5	—12 — 8	γ	54 57·390	4 36 51·82	4	+ 2 — 2
h	29 20·782	4 33 5·61	4	+ 2 —32	δ	55 39·767	6 40 48·56	6	+ 3 + 4
i	30 41·165	5 1 2·67	6	— 5 — 3	ε	56 17·674	5 17 48·64	8	+ 2 — 6
k	30 53·435	4 32 43·27	8	+ 5 + 2	ζ	57 4·819	8 0 14·13	6	— 3 + 4
l	31 22·155	3 43 19·28	4	+ 8 — 1	η	57 21·717	4 56 27·89	4	— 3 —29
m	31 54·023	4 53 39·94	8	+ 3 + 1	θ	59 23·815	6 53 57·39	6	+ 1 + 1
n	34 26·932	5 42 7·60	5	—12 —10	ι	20 0 44·897	4 44 4·49	6	+ 2 +13
o	34 53·525	4 17 20·35	4	+ 3 — 1	ι'	0 46·730	7 19 55·40	7	+ 4 —15
p	35 56·046	4 32 49·02	14	+ 5 0	κ	1 3·738	8 29 58·59	6	+ 4 — 1
q	39 23·694	4 47 22·32	8	0 — 5	λ	2 45·866	7 20 32·70	8	+ 1 +14
r	40 59·530	3 56 0·20	4	+ 2 — 2	μ	5 8·955	9 10 12·22	14	+ 2 0
s	41 53·360	5 30 22·31	4	+ 2 — 1	C	14 31·541	6 42 28·39	32	— 4 0
t	43 4·522	4 46 18·17	14	+ 1 — 2	D	19 55·082	3 9 35·59	32	— 1 — 1

The mean error of an observation is—

for the reference stars, from 126 and 127 observations : in R.A. $\pm$ $^{s}0\cdot032$; in Dec. $\pm$ $''0\cdot45$

for the comparison stars, from 259 observations : „ $0\cdot049$ „ $0\cdot61$

Digitized by Google

MELBOURNE.

Observations with the new Transit-Circle, communicated by Mr. Ellery.

1889	A		B		C		D		Observer	Day Correction	
	$19^h\ 6^m$	$-\ 8°\ 7'$	$19^h\ 14^m$	$-\ 5°\ 37'$	$20^h\ 14^m$	$-\ 6°\ 42'$	$20^h\ 19^m$	$-\ 3°\ 9'$			
	s	"	s	"	s	"	s	"		s	"
July 4	39·47	27·31	37·36	20·03	31·54	28·81	...	...	S	—0·039	+ 0·81
5	·55	26·27	·38	19·60	·55	26·49	55·10	33·84	I	— 63	— 0·52
6	·47	26·64	·39	19·43	...	...	...	...	P	— 40	+ 0·02
9	·36	26·88	·30	20·00	·43	27·48	·04	33·30	P	+ 50	— 0·16
10	...	26·39	...	20·28	...	...	...	...	S	...	+ 0·34
15	·44	26·32	·30	19·78	·60	27·39	·13	33·73	P	— 35	— 0·27
17	·41	24·58	·38	19·10	·50	25·85	·10	33·32	I	— 15	— 1·36
18	·39	26·05	·32	19·20	·43	27·20	·03	33·99	P	+ 40	— 0·46
19	·45	24·81	·36	18·80	...	...	·10	33·45	W	— 34	— 1·23
20	·38	25·79	·29	18·89	·56	26·61	·10	34·26	I	0	— 0·68
23	·41	26·72	·32	19·64	·62	27·24	·04	33·97	I	— 15	— 0·18
26	·43	27·02	·28	19·71	·51	26·99	·13	34·59	I	— 5	0·00
Aug. 1	·44	26·69	...	...	·59	27·90	·06	34·80	S	— 25	+ 0·27
2	·42	26·92	·24	20·39	...	29·17	·10	35·34	P	+ 16	+ 0·88
3	·36	27·44	·35	20·42	·52	28·05	·06	35·28	S	+ 10	+ 0·73
5	·37	26·84	·32	20·03	·61	27·59	·09	35·50	P	— 15	+ 0·42
7	·45	25·87	·34	17·52	...	...	...	...	I	— 27	— 1·08
8	·42	26·80	·25	19·19	·48	27·21	·08	34·66	P	+ 25	— 0·11
9	·42	26·58	·35	20·63	...	...	...	...	S	— 11	+ 0·52
17	·49	24·65	·31	19·17	·56	27·77	·07	35·59	I	— 25	— 0·28
18	·45	25·79	·31	18·96	·51	26·87	·14	33·83	W	— 20	— 0·71
21	·32	27·58	·28	19·48	·53	28·00	·08	35·28	S	+ 30	+ 0·51
22	...	27·29	...	...	...	27·96	...	35·16	I	...	+ 0·61
24	·40	26·95	·28	21·56	·44	28·54	·01	34·77	S	+ 50	+ 0·88
25	·43	26·16	·33	19·91	·50	26·80	·11	34·62	W	— 10	— 0·20
26	·35	27·31	·29	20·91	·49	28·74	·05	35·53	P	+ 37	+ 1·05
27	·40	26·48	·27	19·77	·48	27·55	·04	34·98	S	+ 35	+ 0·12
Means ...	39·419	26·45	37·317	19·70	31·520	27·55	55·079	34·54			

1889	α	δ (south)	1889	α	δ (south)	1889	α	δ (south)	1889	α	δ (south)	1889	α	δ (south)
a	s	"	b	s	"	c	s	"	d	s	"	e	s	"
July 4	25·22	20·16	July 10	...	60·34	July 23	6·33	3·75	July 4	18·04	11·34	Aug. 2	40·25	2·09
5	·34	19·23	15	2·56	58·75	Aug. 2	·28	5·26	5	·06	10·91	5	·32	0·24
6	·22	19·78	18	·46	58·60	3	·23	5·84	18	17·91	10·40	7	·28	0·43
			19	·48	57·97				19	18·02	10·47	8	·20	1·31
									20	17·96	11·41	17	·26	3·51
												18	·30	0·75

Digitized by Google

1889	α	δ (south)	1889	α	δ (south)	1889	α	δ (south)	1889	α	δ (south)	1889	α	δ (south)
f	s	″	m	s	″	s	s	″	y	s	″	ζ	s	″
July 15	50·54	47·61	July 23	54·05	38·74	Aug. 3	53·28	22·07	July 15	25·95	51·85	Aug. 2	4·87	13·68
26	·49	47·26	26	·00	38·90	5	·35	22·17	17	·86	52·24	3	·81	13·64
Aug. 2	·57	48·96	Aug. 1	53·97	39·76	7	·29	21·97	18	·88	52·24	8	·71	12·92
5	·54	48·23	2	·94	39·25	t			19	·93	51·50	η		
9	...	50·00	n			July 4	...	15·49	z			July 4	21·73	29·41
18	·48	47·77	Aug. 3	26·89	6·87	5	4·54	16·24	July 20	3·48	57·83	5	·78	26·78
24	·50	47·71	5	·96	6·68	6	·49	17·99	23	·56	57·91	15	·84	27·00
g			7	·95	5·86	9	·47	17·93	26	·47	57·98	θ		
July 5	37·67	21·49	o			10	...	17·91	Aug. 1	·58	57·78	July 18	23·79	55·39
6	·66	22·74	July 17	53·59	19·35	15	·52	16·93	α			19	·90	54·86
9	·59	22·43	18	·48	19·57	23	·52	16·68	Aug. 2	18·15	55·50	20	·80	56·41
h			19	·51	18·82	Aug. 1	·58	18·01	3	·09	56·02	ι		
July 18	20·68	4·15	p			2	·44	17·40	5	·16	54·63	July 4	44·84	5·78
20	·68	59·93[1]	July 5	56·09	48·66	u			β			5	·86	4·82
23	·81	4·29	6	·04	48·59	July 20	43·87	18·73[1]	Aug. 8	38·02	15·14	9	·83	4·11
Aug 3	·76	5·62	9	·05	49·08	26	·79	23·74	18	·06	14·36	ι′		
i			15	·03	47·89	Aug. 3	·78	25·62	22	...	16·49	July 23	46·79	54·11
Aug. 25	41·17	1·63	20	·02	47·49	24	·87	25·06	24	·03	15·90	26	·77	54·06
26	·13	2·17	23	55·99	48·25	25	·86	23·88	25	·07	...	Aug. 1	·66	54·48
27	·01	1·98	Aug. 1	56·01	48·55	v			γ			2	·69	55·08
k			2	55·94	47·97	Aug. 5	56·17	25·99	July 9	57·36	51·02	3	·68	55·29
July 5	53·48	41·38	q			8	·13	26·05	10	...	51·85	κ		
6	·45	42·45	July 5	23·68	21·16	17	...	25·82	15	·33	51·16	July 15	3·71	57·06
10	...	42·84	6	·75	21·84	18	·27	25·40	17	·27	50·40	17	·62	57·45
15	·40	41·26	9	·64	21·41	w			δ			18	·69	56·72
l			15	·70	21·92	July 5	27·24	31·42	July 18	39·69	47·69	μ		
Aug. 8	22·11	18·38	r			6	·18	31·57	19	·78	46·72	July 4	8·91	12·71
17	·19	18·65	July 17	59·51	58·04	9	·17	30·71	20	·73	47·19	5	9·06	11·10
21	·00	19·99	18	·52	58·42	18	·20	31·17	ε			9	8·92	11·18
24	...	19·08	26	·49	58·53[2]	x			July 23	17·72	48·04	15	·93	9·70
						July 20	22·45	58·38	26	·72	47·10	17	·98	10·43
						23	·48	58·94	Aug. 1	·63	47·30			
						26	·33	58·86						
						Aug. 1	·46	58·51						

[1] Reductions correct; probably an error of 10ᵖ was made in reading the telescope-micrometer, and a correction −4″·26 has been applied in both cases in forming the mean.
[2] Melbourne 56″·03, but the reading of microscope D requires the correction +10″.

The initials of the observers' names are given with the table for the reference stars, viz., W = E. J. White, S = W. J. Swan, P = G. A. M. Pringle, I = F. N. Ingamells. Comparing the observations of the reference stars with their simple means

Digitized by Google

given in the last line of the table, well marked personal equations are shown, the daily deviations $\Delta\alpha$ and $\Delta\delta$ being for the different observers :—

S.		I.		P.		W.	
$+ 0^{s}\cdot04$	$- 0''\cdot82$	$+ 0^{s}\cdot06$	$+ 0''\cdot51$	$+ 0^{s}\cdot06$	$+ 0''\cdot04$	$+ 0^{s}\cdot02$	$+ 1''\cdot21$
...	$- 0\cdot29$	$+ 0\cdot01$	$+ 1\cdot35$	$- 0\cdot05$	$+ 0\cdot14$	$+ 0\cdot02$	$+ 0\cdot70$
$+ 0\cdot02$	$- 0\cdot28$	$0\cdot00$	$+ 0\cdot67$	$+ 0\cdot03$	$+ 0\cdot26$	$+ 0\cdot01$	$+ 0\cdot19$
$- 0\cdot01$	$- 0\cdot74$	$+ 0\cdot01$	$+ 0\cdot17$	$- 0\cdot04$	$+ 0\cdot45$		
$+ 0\cdot01$	$- 0\cdot53$	$0\cdot00$	$- 0\cdot02$	$- 0\cdot02$	$- 0\cdot90$		
$- 0\cdot03$	$- 0\cdot52$	$+ 0\cdot02$	$+ 1\cdot40$	$+ 0\cdot01$	$- 0\cdot43$		
$- 0\cdot05$	$- 0\cdot90$	$+ 0\cdot02$	$+ 0\cdot26$	$- 0\cdot03$	$+ 0\cdot09$		
$- 0\cdot04$	$- 0\cdot13$	...	$- 0\cdot62$	$- 0\cdot04$	$- 1\cdot06$		
(I)$- 0\cdot008$	$- 0\cdot52$	$+ 0\cdot018$	$+ 0\cdot47$	$- 0\cdot010$	$- 0\cdot17$	$+ 0\cdot017$	$+ 0\cdot70$
(I)$- 0\cdot006$	$- 0\cdot51$	$+ 0\cdot022$	$+ 0\cdot47$	$- 0\cdot007$	$- 0\cdot16$	$+ 0\cdot021$	$+ 0\cdot71$

If, with these mean differences (I), all observations are reduced to the mean of the four observers, the means for the Declinations of the four reference stars are changed $+0''\cdot04$, $+0''\cdot03$, $+0''\cdot05$, $-0''\cdot01$, while the Right Ascension of **C** only is changed, by $+0^{s}\cdot001$. In consequence of an oversight—one day's observations being attributed to another observer—the observations were reduced to places of the reference stars differing $-0^{s}\cdot002$ and $-0''\cdot04$ from what they should be for the mean system of the four observers. The day corrections used to reduce to this system are tabulated above with the observations of the reference stars. They are the mean reductions found from these stars, whenever all four or three of them have been observed; when only two have been observed, they are means from the reductions furnished by them, with double weight, and from the observer's mean reduction as found in a second approximation.

Means of Reduced Observations.

Star	R.A. 1889·0	Dec. 1889·0	No. obs.	Star	R.A. 1889·0	Dec. 1889·0	No. obs.	Star	R.A. 1889·0	Dec. 1889·0	No. obs.
	h m s	° ′ ″			h m s	° ′ ″			h m s	° ′ ″	
A	19 6 39·416	−8 7 26·45	25, 27	n	19 34 26·923	−5 42 6·45	3	β	19 52 38·056	−4 39 15·30	4
B	14 37·314	5 37 19·73	24, 25	o	34 53·524	4 17 20·26	3	γ	54 57·320	4 36 51·47	3, 4
a	21 25·213	5 57 19·62	3	p	35 56·007	4 32 48·39	8	ζ	55 39·735	6 40 47·99	3
b	23 2·490	6 23 59·32	3, 4	q	39 23·670	4 47 21·82	4	ε	56 17·675	5 17 47·45	3
c	24 6·284	5 9 4·47	3	r	40 59·513	3 55 58·94	3	ζ	57 4·814	8 0 12·91	3
d	25 17·979	5 54 11·32	5	s	41 53·296	5 30 22·05	3	η	57 21·738	4 56 27·72	3
e	25 40·265	5 21 1·44	6	t	43 4·493	4 46 17·04	7, 9	θ	59 23·832	6 53 56·34	3
f	27 50·518	4 58 47·97	6, 7	u	43 43·843	4 48 24·12	5	ι	20 0 44·826	4 44 4·86	3
g	28 37·622	4 41 22·44	3	v	44 56·187	4 58 25·99	3, 4	ι'	0 46·714	7 19 54·26	5
h	29 20·741	4 33 4·71	4	w	47 27·194	4 51 31·50	4	κ	1 3·670	8 29 57·77	3
i	30 41·124	5 1 1·60	3	x	48 22·419	5 19 58·82	4	μ	5 8·940	9 10 11·32	5
k	30 53·397	4 32 42·09	3, 4	y	51 25·894	4 58 52·83	4	C	14 31·523	6 42 27·49	20, 22
l	31 22·110	3 43 18·82	3, 4	z	52 3·511	5 28 58·03	4	D	19 55·080	3 9 34·57	21, 22
m	31 53·983	4 53 38·92	4	α	52 18·137	6 38 54·71	3				

Digitized by Google

The mean error of one reduced observation is—

for the reference stars :	in R.A.	± 0ˢ·039	(90 observations) ; in Dec.	± 0″·52 (96 observations)
„ comparison „	„	± 0ˢ·050	(142 „) „	± 0″·64 (150 „)

From the places as communicated from Melbourne, without day corrections, the mean error of an observation of a reference star would be ±0ˢ·045 and ±0″·80 ; the sums of the squares are reduced by the introduction of the day corrections from 0·1749 and 58·57 to 0·0937 and 17·78.

NAPLES.

A very extended and accurate series of observations was made with the Repsold Meridian-Circle by Professor Fergola. From the apparent places communicated by him, the following mean places 1889·0 were derived by Dr. Battermann :—

1889	A		B		C		D		Day Correction			Circle
	19ʰ 6ᵐ	−8° 7′	19ʰ 14ᵐ	−5° 37′	20ʰ 14ᵐ	−6° 42′	20ʰ 19ᵐ	−3° 9′	Δα	Δδ	No. Stars	
	ˢ	″	ˢ	″	ˢ	″	ˢ	″	ˢ	″		
June 6	39·479	27·32	37·374	20·17	31·562	28·27	55·120	35·91	−0·064	−0·37	10	W
7	·493	26·99	·359	19·95	·537	27·92	·078	35·39	− 39	0·87	10	W
8	·416	26·63	·254	19·70	...	...	·066	35·26	+ 13	0·95	8	W
11	·450	26·11	·342	19·37	...	...	·069	34·13	− 11	1·76	8	W
13	·423	26·39	·270	19·68	·503	27·27	...	...	+ 9	1·37	8	W
17	·474	26·93	·367	19·80	·605	27·33	·111	33·93	− 64	1·24	9, 10	W
18	·463	26·64	·343	19·31	·518	26·49	·043	34·35	− 18	1·54	11	W
19	·455	27·07	·338	20·11	·536	28·26	·099	35·24	− 31	0·66	8	W
20	·432	26·98	·351	20·14	·502	28·01	·067	35·21	− 19	0·81	10	W
21	·439	27·64	·357	19·48	·537	27·71	·093	34·93	− 28	0·84	11	W
22	·437	27·01	·309	20·16	·515	28·04	·054	35·25	0	0·95	9	W
23	·411	27·00	·344	20·36	·525	27·91	·041	35·40	− 2	0·68	10	W
25	·422	28·04	·366	20·41	·516	28·44	·083	35·73	− 21	0·34	10	W
26	·425	27·66	·332	20·54	·504	28·93	·013	35·60	+ 2	0·17	8	W
July 1	·400	25·81	·319	19·05	·434	27·12	·018	34·47	+ 19	1·69	10	W
3	·418	26·60	·371	19·74	...	...	...	...	− 14	1·14	7	W
4	·473	27·66	·337	20·18	·458	27·69	·001	34·77	+ 7	0·67	11	W
5	·470	26·77	·303	19·40	·433	27·96	·047	34·02	0	1·23	8	W
6	·457	27·07	·299	20·26	·494	27·32	·093	34·94	− 7	1·00	10	W
8	·454	27·21	·312	19·69	·489	27·76	·072	34·50	− 13	1·20	10	W
9	·404	26·74	·349	20·27	...	...	...	...	0	0·95	7	W
11	·401	27·54	·330	20·21	·499	28·54	·029	35·43	+ 8	0·56	10	W
12	·408	27·22	·309	20·29	·457	27·97	·021	35·17	+ 23	0·63	11	W
13	·420	27·49	·344	20·84	·451	27·82	·031	34·87	+ 11	0·70	12	W
14	·405	26·89	·340	19·57	·481	28·24	·052	35·62	+ 6	0·79	11	W

Digitized by Google

1889	A—*cont.*		B—*cont.*		C—*cont.*		D—*cont.*		Day Correction			Circle
	$19^h\ 6^m$	$-8°\ 7'$	$19^h\ 14^m$	$-5°\ 37'$	$20^h\ 14^m$	$-6°\ 42'$	$20^h\ 19^m$	$-3°\ 9'$	$\Delta\alpha$	$\Delta\delta$	No. Stars	
	s	″	s	″	s	″	s	″	s	″		
July 15	39·424	26·75	37·334	19·99	31·462	27·46	54·999	34·08	+0·028	−1·34	10	W
16	·413	27·20	·328	20·05	·533	27·04	55·023	34·79	− 4	−0·95	9	W
18	·422	28·54	·298	21·92	·414	28·71	·010	36·39	+ 34	+0·53	12	E
21	·414	28·47	·318	21·63	·495	28·53	·060	36·51	− 2	0·44	11	E
22	·446	28·68	·290	21·75	·443	29·34	·050	36·47	+ 14	0·87	9	E
23	·392	29·12	·315	22·32	...	...	...	...	+ 23	1·40	8	E
24	·404	28·21	·320	21·21	·450	29·34	54·996	36·24	+ 15	0·48	11	E
25	·384	28·16	·330	21·05	·463	29·20	55·083	36·11	+ 8	0·56	10	E
26	·396	28·80	·272	22·24	...	...	...	...	+ 45	1·22	6	E
29	·446	28·98	·374	21·26	·456	30·05	·033	37·30	− 1	1·29	11	E
31	·410	28·64	·275	21·98	·444	30·34	·057	37·60	+ 26	1·34	12	E
Aug. 1	·411	29·17	·323	22·54	·444	30·10	·065	36·86	+ 5	1·19	11	E
2	·407	29·30	·294	21·98	·471	29·48	·058	36·93	+ 16	1·15	12	E
3	·461	29·10	·310	21·15	...	...	...	...	− 8	1·10	5	E
4	·403	28·98	·301	21·04	·494	29·83	·004	37·31	+ 12	1·30	11	E
5	·398	28·69	...	...	·501	30·24	·050	37·09	+ 23	1·28	12	E
6	·451	28·79	·320	22·26	...	...	...	...	− 5	1·44	6	E
7	·371	29·51	·286	22·90	·463	30·34	·046	37·29	+ 21	1·64	10	E
9	·442	29·28	·327	22·02	...	...	...	...	− 7	1·12	8	E
11	·434	28·70	·291	22·14	·486	28·78	·095	36·42	+ 2	0·81	11	E
16	·417	28·25	·295	21·40	·494	29·25	·022	35·70	+ 26	0·57	9	E
17	·503	29·06	·341	22·42	...	...	·110	37·16	− 34	1·53	9	E
18	·438	29·78	·321	22·93	·480	30·58	·056	37·45	− 4	1·86	11	E
19	·400	28·31	·286	22·21	·463	29·42	·047	36·41	+ 17	0·90	7	E
23	·408	29·10	·292	22·16	·499	29·51	54·992	36·80	+ 15	0·90	8	E
25	·397	28·24	·263	21·64	·411	29·75	·990	35·67	+ 50	0·74	9	E
Sept. 3	·409	27·52	·310	21·11	...	...	...	...	+ 24	0·14	4	E
7	·444	27·63	·316	21·93	·540	29·34	55·046	37·14	− 1	0·93	10	E
14	·360	28·43	...	...	...	...	...	...	+ 51	0·68	6	E
19	...	...	·349	21·57	...	...	...	...	− 38	0·31	6	E
27	·494	27·62	·343	21·94	·514	29·14	·068	36·69	− 28	0·58	11	E
28	·416	28·79	·350	21·69	·480	29·42	·047	37·18	− 2	0·90	11	E
Oct. 3	·416	27·71	·345	21·26	·511	28·23	·037	35·90	0	0·03	9, 10	E
10	·445	28·81	·337	21·78	...	...	...	...	− 14	0·95	7	E
11	·432	28·11	·372	21·80	...	...	...	...	− 34	0·81	7	E
18	·429	27·76	·310	21·15	...	...	...	...	− 9	+0·12	7	E
22	·429	...	·361	...	...	...	...	...	− 35	...	8	W
23	...	...	·313	...	...	...	...	...	+ 9	...	6	W
C.W. ...	39·436	27·01	37·333	19·95	31·502	27·80	55·055	34·96				
C.E. ...	·421	28·61	·315	21·82	·473	29·50	·044	36·72				
Mean ...	39·428	27·80	37·324	20·88	31·488	28·65	55·049	35·84				

Digitized by Google

1889	α	δ (south)
a	s	″
June 6	25·266	20·64
21	·208	·17
July 13	·173	·54
18	25·170	22·14
23	·184	·51
31	·198	·37
Sept. 27	·204	·06
b		
June 7	2·546	0·58
22	·490	·28
July 14	·443	·36
21	2·487	0·78
19	·534	2·64
Aug. 6	·472	·70
c		
June 8	6·219	5·48
18	·256	4·90
July 1	·173	·87
25	6·212	7·46
Aug. 1	·207	·65
5	·172	·38
d		
June 13	17·925	11·29
20	·984	·92
25	·927	12·33
July 3	·897	11·97
4	·948	12·14
12	·925	·25
15	·872	·07
24	17·936	13·64
26	·892	·44
Aug. 3	·910	·93
Sept. 7	·942	14·25
19	·989	13·47
e		
June 11	40·329	0·96
17	·402	1·73
21	·313	2·18
26	·283	·45
e—*cont.*		
July 6	40·316	1·80
11	·275	2·01
16	·292	·01
18	40·227	2·54
22	·248	3·65
23	·277	·82
Aug. 2	·300	4·34
4	·269	·25
Sept. 28	·347	3·18
f		
June 6	50·529	49·18
23	·511	48·59
July 8	·514	·20
9	·449	·45
13	·486	·40
14	·476	·31
29	50·478	50·51
31	·471	·35
Sept. 3	·477	49·83
14	·385	50·09
27	·515	·42
g		
June 7	37·669	22·75
July 1	·687	·38
21	37·613	23·87
Oct. 11	·658	24·43
h		
June 18	20·704	4·20
25	·754	·95
July 25	20·690	5·90
Aug. 17	·689	6·56
i		
June 13	41·148	1·05
17	·122	·42
21	·145	·96
July 12	·089	2·61
16	·167	1·44
i—*cont.*		
July 18	41·100	2·84
Aug. 11	·126	3·74
16	·101	·31
18	·135	4·52
Sept. 19	·178	1·70
Oct. 3	·309	2·33
22	41·158	...
k		
June 19	53·415	43·14
20	·422	42·81
July 5	·394	43·55
15	·349	41·57
23	53·363	45·21
26	·339	44·60
Aug. 25	·335	·29
Sept. 28	·403	·41
l		
July 3	22·140	17·56
4	·086	18·14
24	22·069	19·25
Oct. 18	·115	·17
m		
June 22	53·972	39·07
23	·965	40·87
July 6	·980	·05
9	·984	39·43
11	·983	·80
13	·940	·62
22	53·972	41·89
Aug. 9	54·038	·82
Sept. 7	53·982	·80
n		
June 7	26·893	6·70
July 8	·878	5·55
21	26·892	8·57
Aug. 5	·847	9·28
6	·898	·39
Oct. 23	26·883	...
o		
June 11	53·499	19·62
21	·502	20·94
Aug. 7	53·492	22·21
Oct. 10	·486	·19
p		
June 6	56·079	49·19
8	55·983	48·76
13	·990	·07
17	·926	·59
18	·986	·56
20	·995	·63
23	·941	·87
25	56·012	49·18
26	55·995	·35
July 1	·987	47·75
3	·971	48·60
4	·983	·95
5	56·003	·53
11	55·968	·94
12	·964	·97
13	·979	·97
14	·959	49·11
15	·921	47·96
16	·985	48·99
18	55·953	50·18
Aug. 1	56·014	·21
2	55·976	·76
3	·991	·92
4	·993	·92
9	56·008	·32
11	55·977	·49
16	·970	·14
17	56·019	51·38
18	55·977	·73
23	·990	50·12
25	·930	·31
Sept. 3	·937	49·89
14	·984	50·22
19	56·040	49·67
27	·013	50·47
28	55·971	·51
Oct. 3	·996	49·65
11	56·044	50·63
18	·028	·09
22	56·035	...
q		
June 19	23·703	22·25
July 6	·653	21·47
9	·681	·72
29	23·631	24·20
31	·641	23·82
Aug. 5	·641	·65
6	·643	24·01
r		
June 17	59·544	59·27
July 3	·553	·39
4	·469	60·55
14	·486	·14
Aug. 1	59·493	62·37
2	·467	·57
Sept. 7	·473	·69
14	·447	61·95
19	·505	62·10
s		
June 18	53·287	20·90
July 13	·274	22·31
24	53·276	23·47
Aug. 17	·307	24·52
Oct. 3	·219	22·96
t		
June 6	4·513	18·78
7	·479	16·93
11	·447	·64
13	·440	17·30
21	·480	·72
22	·427	·47
23	·469	·78
July 1	·420	16·36
5	·476	17·04
8	·445	·40
11	·439	·91
12	·438	18·21
23	4·435	20·23
25	·437	19·63
26	·403	20·38
29	·457	·51
31	·409	19·97

Digitized by Google

1889	α	δ (south)
t—*cont.*	s	"
Aug. 3	4·472	20·25
4	·437	·10
5	·424	19·95
6	·468	20·69
7	·433	·15
9	·441	19·86
11	·443	·86
16	·389	·79
23	·435	·50
Sept. 27	·472	·32
Oct. 10	·470	·47
11	·512	·43
18	·462	18·78
22	4·522	...
23	·427	...
u		
June 8	43·775	24·19
20	·834	25·06
July 22	43·793	27·16
Aug. 18	·777	·52
19	·826	26·84
Sept. 28	·800	·72
v		
June 25	56·217	26·90
26	·119	27·45
July 6	·152	26·27
21	56·180	27·88
Aug. 1	·196	·81
2	·167	28·53
w		
June 17	27·260	31·59
18	·167	·06
23	·186	·51
July 3	·199	·46
4	·156	32·11
18	27·159	33·19
24	·174	32·56
31	·135	34·56
Aug. 4	·164	·21
7	·145	·39
Sept. 7	·171	33·99
14	·118	·48
Oct. 3	·168	32·32

1889	α	δ (south)
x	s	"
June 7	22·437	59·25
11	·384	57·88
21	·415	59·11
July 1	·314	58·18
22	22·338	61·24
23	·350	·16
25	·358	60·71
Aug. 5	·309	61·24
18	·402	62·34
23	·288	61·82
Oct. 10	·402	·39
22	22·400	...
23	·354	...
y		
June 6	25·922	54·01
20	·862	53·36
25	·893	·92
July 13	·843	·60
15	·859	·04
21	25·871	54·69
26	·798	56·03
29	·849	·08
Aug. 2	·840	55·44
9	·839	·85
Sept. 27	·906	·19
z		
June 8	3·499	58·66
22	·482	57·63
26	·477	59·18
July 12	·434	58·71
14	·402	·61
18	3·460	60·19
Aug. 1	·474	·64
11	·502	·42
16	·423	59·55
17	·465	61·35
25	·400	60·91
Sept. 28	·442	·37

1889	α	δ (south)
α	s	"
June 19	18·111	55·22
July 31	18·113	57·54
Aug. 4	·114	·64
5	·114	·27
Oct. 18	·092	56·19
β		
June 18	38·018	14·45
23	·000	15·55
July 16	37·984	·84
24	38·016	17·08
Aug. 7	·020	·75
Oct. 11	·019	·17
γ		
June 11	57·269	50·69
21	·332	·96
July 23	57·240	54·27
25	·285	53·31
Oct. 3	·312	52·78
22	57·338	...
δ		
June 7	39·752	48·96
July 8	·749	·34
9	·707	·56
11	·695	·86
Aug. 18	39·722	51·39
Sept. 7	·692	50·28
14	·648	49·91
19	·753	·49
Oct. 10	·751	50·08
ϵ		
June 6	17·699	48·47
20	·657	·55
22	·623	·46
July 15	·617	47·88

1889	α	δ (south)
ϵ—*cont.*	s	"
July 21	17·678	49·70
Aug. 2	·613	50·11
9	·648	·16
11	·620	49·94
16	·597	50·67
19	·655	·55
Oct. 23	17·616	...
ζ		
June 8	4·733	14·26
17	·843	13·29
19	·790	·50
July 29	4·753	16·05
Aug. 5	·751	·28
Sept. 27	·816	15·22
28	·771	·50
η		
June 13	21·690	27·07
18	·743	26·04
July 13	·718	27·42
16	·748	26·30
18	21·699	29·48
31	·660	·54
Aug. 1	·721	28·99
4	·652	29·75
17	·728	·56
θ		
July 4	23·766	57·41
12	·745	·08
24	23·759	58·77
Aug. 25	·745	59·07
Oct. 3	·764	57·62
11	·798	58·55
18	·808	·53
ι		
July 8	44·889	3·38
9	·828	·17
21	44·841	4·85
25	·786	·54
Aug. 2	·807	5·13
Sept. 7	·752	·21

1889	α	δ (south)
ι'	s	"
July 5	46·638	54·61
6	·680	55·22
14	·641	·41
15	·625	·03
22	46·702	57·02
Aug. 7	·683	·77
9	·647	·52
18	·691	·07
Oct. 10	·656	·57
κ		
July 11	3·701	59·17
Aug. 5	3·647	61·06
11	·618	60·85
Sept. 28	·667	61·24
μ		
June 25	8·928	12·17
26	·899	·43
July 1	·911	10·48
4	·876	11·88
6	·888	·51
8	·898	·06
12	·861	·66
13	·875	·79
14	·953	·77
18	8·844	12·69
24	·902	·73
29	·895	14·21
31	·864	·22
Aug. 1	·843	·29
2	·862	13·96
4	·923	14·44
5	·834	·42
7	·863	·78
11	·891	13·29
17	·905	14·44
18	·907	·51
19	·862	13·88
23	·933	12·96
25	·869	13·82
Sept. 27	·906	12·92
Oct. 22	8·918	...
23	·909	...

Digitized by Google

The system the Right Ascensions were referred to is not stated. A mean correction of the clock and its daily rate were used in the Naples reductions, the first generally being determined before the observation of the *Victoria* zone, for $18^h\,29^m$ S.T. with few exceptions, only on five evenings after the zone or for a mean epoch falling within the zone. The rate employed is that between the two clock-corrections next preceding and following the zone, which has been considered uniform between these two epochs. As the rate appears not to have been very uniform throughout, besides a progressive retardation, it would have been better to interpolate between the observed rates, but though the effect of such a change would be quite perceptible for the individual results of some days, it would in every case be quite insensible in the general means, and besides, the chief part of it is included in the day corrections determined from the comparison with the general means.

By an oversight, for the three days on which the clock-error was determined after the zone, the rate between the epoch of that clock-error and the following instead of the preceding determination has been used. For this reason the Right Ascensions as given in the table for the three days require the following corrections :—

	s	s	h m
July 23	+ 0·026	− 0·018	(t − 19 32)
Sept. 14	+ 0·008	− 0·006	(t − 19 42)
Sept. 15	+ 0·008	− 0·005	(t − 19 32)

The general means as found in the first approximation would be changed by this correction : $+0^s{\cdot}001$ for stars **A, B, d, f, i, t, w,** δ ; $+0^s{\cdot}002$ for **e, r, x** ; $+0^s{\cdot}003$ for **k,** γ ; and $+0^s{\cdot}004$ for α. The corrections however would be reduced to half their amount by employing the most probable rates interpolated for the three evenings, and actually become nearly fully included in the day corrections, so that they cannot exercise any sensible influence upon the mean results of the second approximation.

The Declinations depend upon the nadir point, assumed constant for each day, and the latitude $40^\circ\,51'\,45''{\cdot}92$. No corrections were applied for flexure nor for division-error. There appears a considerable difference between the Declinations as reduced from observations in the two positions of the instrument. These were : C.W. till July 16, C.E. from July 18 to October 18, and again C.W. for the two last days.

It was afterwards found that among 579 observations of Right Ascension two were comparatively largely discordant, viz., the Right Ascension of **i**, October 3, error, $+0^s{\cdot}176$, and of **p**, June 17, error, $-0^s{\cdot}126$, while for the remaining 577 errors, only 12 amounted to more than $0^s{\cdot}050$, 10 being between $0^s{\cdot}051$ and $0^s{\cdot}063$, one $0^s{\cdot}067$, one $0^s{\cdot}068$. The two Right Ascensions with isolated errors widely

Digitized by Google

exceeding these limits, therefore, seem to be affected with mistakes, and were excluded from the means. In Declination, only four of the 566 errors exceed 1″, the largest being 1″·17.

Means were taken for each of the two positions separately, between which the following differences were found :—

Star	E. — W.		Weight	Star	E. — W.		Weight	Star	E. — W.		Weight	Star	E. — W.		Weight
	s	″			s	″			s	″			s	″	
A	—0·015	—1·60	15·1*	k	—0·035	—1·86	2·0	v	+0·018	—1·20	1·5	η	—0·033	—2·75	2·2
B	— 18	1·87	15·2*	l	— 21	1·36	1·0	w	— 40	2·04	3·1	θ	+ 19	1·27	1·4
a	— 27	1·82	1·7	m	+ 26	2·03	2·0	x	— 34	2·81	3·2*	ι	— 62	1·65	1·3
b	+ 5	1·63	1·5	n	— 6	2·96	1·5*	y	— 26	1·96	2·7	ι'	+ 30	2·32	2·2
c	— 19	2·42	1·5	o	— 11	1·92	1·0	z	— 7	1·93	2·9	κ	— 57	1·88	0·8
d	+ 9	1·75	2·9	p**	+ 10	1·69	9·7	α	— 3	1·94	0·8	μ	— 13	2·21	6·5*
e	— 38	1·85	3·2	q	— 40	2·11	1·7	β	+ 17	2·05	1·5	C	— 29	1·70	11·2
f	— 29	1·72	2·7	r	— 36	2·50	2·2	γ	— 34	2·63	1·5*	D	— 11	1·76	11·7
g	— 42	1·59	1·0	s	— 13	2·05	1·2	δ	— 13	1·55	2·2				
h	— 39	1·65	1·0	t	— 15	2·42	7·9*	ϵ	— 7	1·85	2·7				
i**	— 10	1·37	2·7	u	— 5	2·44	1·3	ζ	— 16	2·08	1·7				

* Weight of $\Delta\alpha$; weight of $\Delta\delta$— 14·8, 14·6, 1·2, 7·2, 2·5, 1·2, 5·8. respectively.
** Without the discordant R.A.

The means of the differences taken with the attached weights corresponding to the number of observations are :—

E.—W. for R.A. —0ˢ·0153 (weight 140·9) ; for Dec. — 1″·894 (weight 137·0)

Means, therefore, were taken from the means for the two positions with regard to the number of observations and applying the reductions $\mp 0^s\cdot008$ $\mp 0''\cdot95$ whenever this was not the same for both positions ; and with these means the day corrections tabulated above (including the reduction to the mean of the two positions) were derived, using all the stars, but giving double weight to those most frequently observed, *i.e.*, the four reference stars and the stars **p**, **t** and μ, and excluding the two observations of **i** and **p** mentioned above.

From the reduced observations the following means, and the corrections II − I of those used in the determination of day corrections, were found.

Digitized by Google

Mean Results of Naples Observations, Equinox 1889·0.

Star	R.A. 1889·0	Dec. 1889·0	No. of obs.	II — I	Star	R.A. 1889·0	Dec. 1889·0	No. of obs.	II — I
	h m s	° ′ ″				h m s	° ′ ″		
A	19 6 39·428	— 8 7 27·80	61, 60	0 0	u	19 43 43·804	— 4 48 25·79	6	+ 1 +14
B	14 37·322	5 37 20·91	61, 59	— 2 — 3	v	44 56·171	4 58 27·26	6	— 1 +21
a	21 25·197	5 57 21·22	7	— 4 +13	w	47 27·175	4 51 32·67	13	+ 4 — 8
b	23 2·487	6 24 1·11	7	— 9 + 9	x	48 22·364	5 20 0·15	13, 11	— 5 — 2
c	24 6·216	5 9 6·48	6	+10 —19	y	51 25·858	4 58 54·46	11	— 4 +11
d	25 17·931	5 54 12·91	12	+ 3 — 2	z	52 3·465	5 28 59·45	12	+ 9 + 8
e	25 40·298	5 21 2·71	13	— 2 — 1	α	52 18·113	6 38 56·08	5	0 +11
f	27 50·482	4 58 49·37	11	+ 2 + 2	β	52 38·006	4 39 16·35	6	— 4 — 5
g	28 37·643	4 41 23·68	4	—14 —32	γ	54 57·289	4 36 52·52	6, 5	— 9 —31
h	29 20·693	4 33 5·35	4	+19 + 5	δ	55 39·713	6 40 49·41	9	— 7 + 3
i	30 41·126	5 1 2·53	11	— 8 —17	ε	56 17·639	5 17 49·30	11, 10	— 1 — 4
k	30 53·389	4 32 43·67	8	+11 + 3	ζ	57 4·767	8 0 14·70	7	—14 + 3
l	31 22·102	3 43 18·83	4	0 —30	η	57 21·711	4 56 28·09	9	+ 4 + 4
m	31 53·981	4 53 40·70	9	+ 4 +10	θ	59 23·777	6 53 58·02	7	+ 4 —28
n	34 26·877	5 42 7·68	6, 5	— 7 + 3	ι	20 0 44·818	4 44 4·22	6	— 1 —16
o	34 53·487	4 17 21·24	4	— 7 0	ι′	0 46·667	7 19 56·13	9	+ 4 +12
p	35 55·989	4 32 49·63	39	+ 2 — 5	κ	1 3·666	8 29 59·97	4	+ 4 +14
q	39 23·657	4 47 22·63	7	0 +25	μ	5 8·896	9 10 12·64	27, 25	+ 4 +15
r	40 59·489	3 56 1·18	9	— 5 — 6	C	14 31·489	6 42 28·64	45	+ 1 + 1
s	41 53·268	5 30 22·87	5	— 6 —23	D	19 55·050	3 9 35·83	47	+ 1 + 1
t	43 4·450	4 46 18·71	32, 30	— 2 + 1					

The differences II − I, or the apparent errors, of the Right Ascensions actually used to determine the day corrections, differ by a trifle ($0^s·001$ or $0^s·002$) for some stars from what they should be if the method of deriving a first approximation of means reduced to $\frac{1}{2}$(E. + W.) had been strictly adhered to. The reason for this is that the computer had overlooked the restoration of the instrument to the first position for the two last days. This has been put right in the tables. Besides, one of the four observations of **h** was wrongly reduced to mean equinox ; this error was detected only when the discussion was finished, and the comparison E. − W., as well as the mean result of the second approximation, were corrected accordingly, but not the small errors introduced into the day corrections, which, instead of the tabulated values, should have been : June 18 $-0^s·016$; June 25 $-0^s·027$; July 25 $+0^s·011$; August 17 $-0^s·031$. Finally however the corresponding corrections were applied to the mean results above tabulated for those five stars for which the error in question reached $0^s·001$, viz.—for **c**, **s**, *n*, corr. $+0^s·001$, and for **v**, **y**, corr. $-0^s·001$.

Digitized by Google

The resulting mean error of one reduced observation was found by comparison of the means to be—

for the reference stars :	in R.A.	$\pm$ 0^s·0235 (214 observations) ;	in Dec. $\pm$ 0·358 (211 observations)
„ comparison stars :	„	$\pm$ 0·0248 (363 „)	„ $\pm$ 0·366 (355 „)

or indiscriminately from all stars : in R.A. $\pm 0^s{\cdot}243$; in Dec. $\pm 0''{\cdot}363$.

Comparing the Naples means with provisional normals, a progression in the Right Ascension became at once apparent, which, though small, was placed beyond doubt by the high accuracy of the observations. The comparison was repeated afterwards with the normals N_3, when, after reducing the differences to $8^m{\cdot}0$, provisionally assuming the Naples Right Ascensions to increase $0^s{\cdot}01$ for one magnitude, the means were found—

		h	m	s			
Naples—N_3	from 10 stars, for	19	22·7	+ 0·0047,	weight	47·1
„	11 „ „	19	37·0	— 0·0042	„	49·8
„	10 „ „	19	50·4	— 0·0075	„	44·9
„	10 „ „	20	4·3	— 0·0115	„	49·0

after giving such weights to the separate differences as had been assumed in the formation of the means N_3 (varying only from 3·3 for the stars observed only four times, to 6·5 for **A** and **B**), the weights' unity being supposed to correspond to a mean error $\pm 0^s{\cdot}0316$. These weights, however, should be considerably increased, and varied to a greater extent, as they had been deduced from an over-estimated constant error due to the incompleteness of the reduction, and the effects of several errors only detected afterwards. The extreme regularity of the progression in the means shows at once that, for the assumed weights, the mean error might be assumed to be much smaller. The means show a decrease of the Right Ascension of about $0^s{\cdot}020$ per hour ; in a second approximation a slightly improved value of the co-efficient $= -0^s{\cdot}022$ was found. This is a variation in the contrary sense of what should be expected if the clock rate gained over the mean daily rate during the night, as generally can be supposed for clocks with mercurial compensation not protected from the daily variation of temperature, and its origin could be traced to the clock only on the supposition that an over-compensation had existed, producing a change of rate from day to night equivalent to a change of daily rate of about 2^s if the Naples clock (Frodsham S.T.) is fitted with a mercurial pendulum, of full 1^s if the pendulum is a gridiron one. If such an amount of compensation error existed it ought to be clearly shown in the day to day rates during the period covered by the observations, but the change of these though large is tolerably regularly progressive, the rate being $-1^s{\cdot}0$ at the beginning of June and $+0^s{\cdot}3$ towards the end of October, and does not appear to be connected with temperature. It must be assumed therefore that the decrease of the Naples Right Ascensions is produced by variation of the instrumental errors ; probably there exists a diurnal variation of azimuth or level, or of both these elements.

Digitized by Google

But whatever the true origin of the error, it is necessary to correct the Naples Right Ascensions by adding $0^s{\cdot}022\ (t - 18^h\,38^m{\cdot}6)^h$ to them, $18^h\,38^m{\cdot}6$ being the mean daily epoch for which the clock error was determined (and therefore a considerable time before the zone) on 60 out of the 65 days. With this correction, the means of the differences arranged in order of the magnitude of the stars become—

from	9 stars,	mean mag.	6·14,	Naples $-$ N_3 =	+0·0053, weight 49·4
	14 „	„	7·68		+0·0096 „ 62·1
	10 „	„	8·08		+0·0150 „ 43·4
	8 „	„	8·41		+0·0168 „ 35·9

An increase of only half the amount first assumed ($0^s{\cdot}0049$ for one magnitude), is shown again with extreme regularity, and the reductions, though small, appear well confirmed by the fact that their combined effect is to make the Naples Right Ascensions closely accordant with the *Astronomische Gesellschaft* system, from which probably the places used to determine the clock error have been taken. Assuming a variation of $+0^s{\cdot}0049$ for one magnitude, the constant term in the reduction becomes $-0^s{\cdot}0032$ for $6^m{\cdot}0$, and the total reduction of the Naples Right Ascensions in the zone is: $-0^s{\cdot}0032 + 0^s{\cdot}0220\ (t - 18^h\,38^m{\cdot}6)^h - 0^s{\cdot}0049$ (mag. $-$ 6·0).

The total amount of the necessary correction, including the additional rectification for stars c, s, v, y, η, of the mean results for Right Ascension tabulated above, and the residual differences, Naples R.A. corr. $- N_3$, are the following :—

Star	Corr.	Res.	Star	Corr.	Res.	Star	Corr.	Res.	Star	Corr.	Res.
	s	s		s	s		s	s		s	s
A	+0·008·1	+ 0·004	k	+0·006·7	+ 0·018	v	+0·016·7	+ 0·004	η	+0·016·2	− 0·006
B	13·4	− 0·005	l	6·2	− 0·014	w	11·3	+ 0·007	θ	14·6	+ 0·002
a	3·7	+ 0·006	m	17·9	0·000	x	12·1	+ 0·004	ι	22·0	− 0·010
b	2·3	+ 0·001	n	14·4	+ 0·006	y	12·2	+ 0·001	ι'	17·6	+ 0·005
c	2·2·	− 0·005	o	9·6	− 0·009	z	11·5·	− 0·010	κ	19·6·	− 0·004
d	2·1	+ 0·007	p	9·0	− 0·009	α	14·1	+ 0·019	μ	26·0·	− 0·002
e	2·8	+ 0·007	q	7·3	+ 0·002	β	14·2	− 0·002	C	30·0	+ 0·000·
f	7·4·	− 0·008	r	10·4	+ 0·010	γ	17·9	+ 0·005	D	34·1	+ 0·007
g	2·8·	+ 0·032	s	11·7	− 0·009	δ	13·8	− 0·012			
h	6·6	− 0·026	t	11·2	− 0·003	ϵ	22·4	0·000			
i	7·6	− 0·001	u	10·9	− 0·003	ζ	15·9	+ 0·005			

The systematic difference between the Right Ascensions N_3 and N_2 is $N_3 - N_2 = +0^s{\cdot}0030 + 0^s{\cdot}0015$ (mag. $-$ 6·0).

Digitized by Google

OXFORD.

The separate results of observations made at the Radcliffe Observatory of the stars a to μ, are printed in Vol. LI. of the *Monthly Notices*, March 1891. The reference stars were not observed. By comparison with the means the following day corrections were found :—

1889	Obs.	$\Delta\alpha$	$\Delta\delta$	No. stars	1889	Obs.	$\Delta\alpha$	$\Delta\delta$	No. stars	1889	Obs.	$\Delta\alpha$	$\Delta\delta$	No. stars
		s	″				s	″				s	″	
June 25	FB	+0·004	+0·03	5	July 29	W	+0·003	+0·68	6	Aug. 29	FB	−0·008	+0·36	4
26	R	−0·004	−0·28	9	Aug. 3	FB	−0·020	+0·12	4	30	W	−0·002	+0·46	5
July 5	R	+0·056	−0·48	8	5	FB	−0·070	+0·30	3	Sept. 6	R	−0·050	+0·24	2
8	R	−0·017	+0·40	3	6	R	−0·020	+0·34	3	10	R	−0·002	+0·41	4
10	R	−0·033	+0·87	6	7	FB	−0·032	−0·36	5	12	W	−0·010	+0·02	2
15	R	−0·005	+0·22	2	15	FB	+0·058	+0·01	5, 4	13	R	−0·015	+0·32	2, 3
18	FB	0·000	−0·60	5	17	FB	−0·008	−0·62	5	18	W	+0·003	−0·33	3
23	R	−0·028	+0·24	5	26	FB	+0·043	−0·74	3	25	R	+0·020	−0·40	2
27	FB	+0·055	−0·08	4	28	W	−0·010	−0·59	3	Oct. 9	FB	−0·060	−0·22	2

No difference to be relied upon appears between the means of the day corrections for the different observers. The observations of five days, therefore, when one star only had been observed, were used without correction, viz., July 19 (R), August 31 (FB), September 9 (W), September 17 (R), and October 12 (W). The means of the reduced observations and their differences from the Oxford means are the following :—

Star	R.A. 1889·0	Dec. 1889·0	No. obs.	II − I	Star	R.A. 1889·0	Dec. 1889·0	No. obs.	II − I
	h m s	° ′ ″				h m s	° ′ ″		
a	19 21 25·193	− 5 57 21·20	3	+ 3 + 9	u	19 43 43·797	− 4 48 25·46	3	− 3 −15
b	23 2·458	6 24 1·31	3	−12 − 1	v	44 56·168	4 58 27·84	3	−12 +38
c	24 6·219	5 9 6·04	3	−11 − 2	w	47 27·175	4 51 32·29	3	−15 − 1
d	25 17·898	5 54 13·11	3	−12 +12	x	48 22·357	5 20 0·80	3	− 3 − 3
e	25 40·297	5 21 2·64	3	+ 7 +23	y	51 25·879	4 58 54·59	3	+19 +14
f	27 50·448	4 58 48·85	3	+18 + 6	z	52 3·475	5 28 59·78	3	− 5 −20
g	28 37·607	4 41 22·95	3	+ 7 + 5	α	52 18·107	6 38 56·04	3	+ 7 0
h	29 20·745	4 33 5·79	3	+15 −12	β	52 37·971	4 39 16·53	3	−19 −12
i	30 41·143	5 1 3·21	3	+ 3 +18	γ	54 57·286	4 36 52·74	3	−14 +21
k	30 53·346	4 32 43·63	3	+16 −14	δ	55 39·761	6 40 49·71	3	+ 1 +27
l	31 22·183	3 43 19·52	3	+23 −34	ϵ	56 17·638	5 17 48·83	3	+ 8 −19
m	31 53·893	4 53 40·88	3	−17 − 8	ζ	57 4·765	8 0 14·61	3	−15 + 2
n	34 26·788	5 42 7·62	3	+ 8 −33	η	57 21·719	4 56 28·40	2	− 1 +12
o	34 53·479	4 17 21·41	3	+ 9 −32	θ	59 23·721	6 53 57·45	3	−19 − 2
p	35 56·005	4 32 49·48	3, 4	+15 − 1	ι	20 0 44·796	4 44 4·22	3	− 4 − 4
q	39 23·640	4 47 22·58	3	−20 + 1	ι'	0 46·649	7 19 56·04	4	−21 + 7
r	40 59·471	3 56 0·69	4, 3	− 9 +29	κ	1 3·616	8 29 59·54	3	−14 +37
s	41 53·300	5 30 23·36	3	0 +15	λ	2 45·742	7 20 33·54	2	−18 +29
t	43 4·472	4 46 18·39	4	+12 −33	μ	5 8·878	9 10 12·68	3	+28 −10

Digitized by Google

Though the differences II—I are not inconsiderable, and the determination of day corrections was rather weak, because of the small number of observations of each star, these corrections agree satisfactorily with those derived afterwards for the 14 days with observations of the planet by comparison with normals. The mean error of an observation is, from 115 observations: in R.A. $\pm 0^{s}\cdot 056$; in Dec. $\pm 0''\cdot 57$. The observations were made by eye and ear.

PARIS.

Observations with two instruments were made, and the apparent places deduced therefrom communicated by Admiral Mouchez. They were reduced to mean equinox by Dr. Lamp, and tabulated as follows:—

Observations made with the "Grand Instrument Méridien."

Observations of the Reference Stars, and Day Corrections.

1889	A		B		C		D		Obs.	Day Correction			Later values	
	$19^h\ 6^m$	$-8°\ 7'$	$19^h\ 14^m$	$-5°\ 37'$	$20^h\ 14^m$	$-6°\ 42'$	$20^h\ 19^m$	$-3°\ 9'$		$\Delta\alpha$	$\Delta\delta$	No. Stars		
	s	″	s	″	s	″	s	″		s	″		s	″
June 3	...	...	...	...	...	...	...	...	C	+0·06	+0·2	8	...	...
4	...	...	...	...	...	...	...	...	O	+0·03	+0·3	11	...	...
11	...	...	...	...	...	...	...	...	C	+0·04	−0·4	10	...	...
14	...	...	...	...	...	...	...	...	H	+0·02	+0·8	4	0·000	+0·85
21	39·37	26·3	37·12	20·0	...	...	...	...	C	−0·02	+0·5	12	− 9	+0·73
23	·37	26·7	·24	20·6	...	...	...	...	C	+0·05	−0·1	11	+ 47	−0·16
24	·35	25·8	·26	19·1	...	...	...	...	O	0·00	−0·3	9, 8	...	...
25	·28	28·4	·25	20·4	...	...	...	...	C	+0·13	−0·4	10, 9	+ 130	−0·36
28	·34	27·4	·29	20·8	...	...	...	...	O	+0·05	+0·1	12	+ 72	−0·11
29	·31	26·8	...	...	...	...	...	...	C	+0·07	0·0	10, 11	...	...
July 1	·25	26·1	·25	21·4	...	...	...	...	C	+0·05	0·0	3	...	...
2	·58	26·9	·26	20·8	...	...	...	...	C	+0·01	−0·1	10	− 28	−0·02
3	·45	26·8	·36	20·7	...	...	...	...	C	+0·01	−0·2	10	+ 1	−0·14
4	·56	27·2	·40	19·7	...	...	...	...	C	−0·10	−0·1	7	...	...
5	·52	27·6	·27	20·5	...	...	...	...	C	+0·06	+0·2	11	+ 73	+0·13
6	·43	27·5	·24	20·8	...	...	...	...	C	+0·03	−0·1	9, 10	+ 39	0·00
7	·30	26·1	·19	20·4	...	...	...	...	FB	+0·10	+0·2	5	...	...
8	·31	26·5	...	...	...	...	...	...	B	+0·09	−0·5	1	...	...
12	·47	26·5	·41	21·2	...	...	...	...	FB	−0·07	−0·1	7	− 65	−0·07
17	·41	25·5	·29	19·4	...	...	...	...	FB	−0·01	−0·9	9	+ 6	−1·00
29	·30	27·3	·23	20·7	...	...	...	...	B	+0·04	+0·3	12	+ 25	+0·37
30	·39	26·1	·25	20·3	...	...	...	...	B	+0·04	0·0	13	+ 40	+0·32
31	·49	27·8	·17	21·2	...	...	...	...	B	−0·02	+0·4	13	− 68	+0·43
Aug. 2	·43	27·8	·34	20·1	...	...	...	...	B	−0·11	−0·3	12	− 102	−0·22
3	·36	27·2	·33	19·8	...	...	...	...	B	−0·05	+0·3	13, 14	...	...
7	·50	26·9	·40	21·2	31·93	27·5	...	35·5	B	−0·19	0·0	11	...	...

Digitized by Google

1889	A		B		C		D		Obs.	Day Correction			Later values	
	$19^h\ 6^m$	$-8°\ 7'$	$19^h\ 14^m$	$-5°\ 37'$	$20^h\ 14^m$	$-6°\ 42'$	$20^h\ 19^m$	$-3°\ 9'$		$\Delta\alpha$	$\Delta\delta$	No. Stars		
	s	″	s	″	s	″	s	″		s	″		s	″
Aug. 10	...	...	37·50	19·8	...	...	...	...	B	−0·22	−0·7	2, 3	...	−0·32
13	...	28·5	·34	20·4	...	...	...	...	B	−0·12	+0·3	6, 7	...	...
16	...	...	...	...	31·50	27·2	...	...	FB	−0·06	−0·7	9	− 41	−0·71
21	39·46	27·4	·24	20·6	·44	28·0	...	...	C	−0·01	−0·2	11	...	...
22	·37	26·7	·35	20·0	·39	28·7	54·97	35·3	C	+0·04	−0·1	12	+ 23	+0·15
26	·51	27·7	·45	21·2	·52	28·6	55·11	35·1	C	−0·04	+0·1	11	− 43	+0·31
28	·43	27·3	·41	19·8	·66	28·8	·06	35·6	C	−0·07	+0·3	11	− 58	+0·10
29	...	...	...	...	·58	28·5	·00	34·8	C	+0·01	0·0	9	− 14	+0·29
30	·40	28·4	...	...	·46	28·1	·10	35·4	C	+0·05	+0·3	11	...	...

As a very irregular use has been made of the reference stars, and the errors of the transits appeared to be large, the day corrections were determined from all of the observed stars, comparing them with the simple means of the places furnished by the instrument, excluding the R.A. observed Aug. 10. The values afterwards derived with the normals N_3, for the observations of *Victoria*, are given for comparison in the last column.

The observers were: C = Callandreau, B = Barré, FB = Boquet, O = Oltramare, H = Henry. Most of the day corrections for observer C are positive, while B makes the Right Ascensions generally too great; it cannot be said however whether these differences are real, and the three isolated Right Ascensions observed by B, July 8 and August 10, were used without correction in the second approximation.

Observations of Comparison Stars.

1889	α	δ (south)	1889	α	δ (south)	1889	α	δ (south)	1889	α	δ (south)	1889	α	δ (south)
a	s	″	c	s	′	e	s	″	f—*cont.*	s	″	i	s	′
June 3	24·99	20·1	June 11	6·18	5·1	June 23	40·22	0·7	Aug. 2	50·71	48·4	June 4	40·96	2·6
24	25·17	19·9	21	·20	5·3	25	·14	59·6	22	·50	49·2	July 3	41·02	1·8
28	24·96	21·2	July 2	·07	5·4	29	·18	2·5				4	·00	1·6
29	25·00	20·5	3	·24	4·6	July 4	·40	2·5	g			5	·08	2·3
July 7	·14	19·9	5	·05	5·7	Aug. 3	·33	1·9	June 21	37·67	22·2	17	·19	0·9
17	·20	17·4	17	·19	3·2				23	·60	23·0	Aug. 13	·19	2·3
b			31	·29	5·1	f			29	·51	22·4	k		
June 4	2·35	1·1	Aug. 7	·18	6·1	June 3	50·46	49·0	July 12	·71	22·5	June 25	53·27	42·6
25	·28	0·3	21	·13	4·8	4	·50	49·4	Aug. 16	·78	21·2	28	·18	43·3
July 1	·49	0·2				11	·45	48·5	29	·61	22·8	Aug. 21	·31	40·6
4	·66	1·4				July 2	·52	47·5	30	·54	23·5	28	·35	43·2
12	·57	0·0	d			3	·25	48·6				l		
29	·39	59·3	June 3	17·73	11·8	5	·43	49·0	h			June 23	21·94	19·2
30	·31	59·4	28	·78	11·8	17	·48	47·8	June 28	20·68	4·9	July 2	22·06	18·5
Aug. 2	·63	0·5	July 6	·69	12·1	29	·57	50·1	July 6	·57	3·9	Aug. 22	·06	18·3
3	...	0·9	12	·97	12·5	30	·36	48·7	Aug. 21	·74	5·3	29	·22	18·4
10	·69	0·4	Aug. 30	·89	12·5	31	·56	49·4	26	·74	4·9	30	·16	19·0

Digitized by Google

1889	α	δ (south)	1889	α	δ (south)	1889	α	δ (south)	1889	α	δ (south)	1889	α	δ (south)
m	s	″	q—*cont.*	s	″	**v**	s	″	**z**	s	″	η	s	″
June 11	53·78	39·0	July 29	23·73	22·6	June 4	56·06	26·3	June 21	3·35	59·6	July 29	21·33	28·7
21	·96	40·7	30	·57	21·5	14	55·99	27·8	25	·17	56·3	30	·61	27·6
29	·90	39·9	31	·58	23·0	28	56·08	26·6	29	·34	58·0	31	·71	27·3
July 12	·95	39·4	Aug. 2	·59	20·1	July 6	·14	26·4	Aug. 21	·50	57·9	Aug. 7	·96	26·9
Aug. 16	·99	39·1	3	·58	22·7	7	55·96	26·6	28	·56	59·2			
			7	·90	21·9	Aug. 3	56·36	27·0	29	·31	58·2	θ		
n			13	·70	22·2	13	·34	27·4	30	·23	59·3			
June 4	26·80	7·5	16	·75	20·6	28	·21	26·9				June 4	23·82	58·8
14	·85	7·8							α			11	·63	56·5
July 6	·86	7·1	**r**			**w**			June 11	18·06	56·2	July 2	·72	56·6
12	·75	6·1	June 21	59·38	1·5	June 3	27·03	31·7	Aug. 22	17·98	55·0	Aug. 2	·86	57·2
17	·74	6·1	July 6	·29	0·6	4	·19	32·0	26	18·00	56·2	16	·70	56·4
			Aug. 21	·43	59·7	25	·06	31·9				30	·75	56·4
o			26	·38	59·3	29	·08	30·8	β					
July 4	53·51	20·7				July 2	·18	32·3	June 24	38·00	16·0			
5	·35	20·5	**s**			17	·20	32·1	28	37·78	15·5	ι		
Aug. 16	·59	19·3	June 14	53·42	22·3	30	·09	32·7	Aug. 7	38·12	15·4	July 3	44·73	3·3
30	·33	21·2	Aug. 22	·20	22·3	31	·12	32·2				29	·90	5·0
			28	·26	21·8	Aug. 2	·35	32·5	γ			30	·71	5·0
p						3	·39	32·8	June 4	57·26	51·2	31	·76	4·2
June 3	55·99	49·1	**t**			13	·29	31·9	14	·22	53·1	Aug. 7	45·03	3·3
11	56·00	48·1	June 3	4·24	18·4	26	·23	31·3	23	·13	51·2			
21	55·89	49·3	4	·41	17·0	29	·09	32·9	24	·30	50·8			
23	·92	49·0	11	·29	17·3				28	·21	51·0	ι'		
24	56·11	49·1	23	·42	17·8				July 29	·30	51·2	June 29	46·49	55·4
25	55·76	...	24	·43	17·1	**x**			30	·31	52·6	July 5	·59	55·7
28	·84	49·2	25	·24	16·3	June 11	22·21	59·0	31	·46	51·6	6	...	55·2
29	·85	48·8	28	·48	16·7	21	·36	60·2	Aug. 2	·33	51·5	Aug. 21	·54	55·0
July 7	·77	51·0	29	·42	16·5	23	·32	59·0	3	·42	52·5	26	·69	55·4
30	56·17	48·2	July 2	·45	17·6	July 3	·31	58·7	7	·31	52·3	28	·64	55·1
31	55·95	50·1	3	·45	17·2	5	·12	58·9						
Aug. 2	56·29	48·3	5	·23	17·6	6	·37	59·1	δ			κ		
3	·06	49·6	29	·34	18·3	29	·13	59·4	June 11	39·72	46·8			
7	·14	48·0	30	·37	18·4	Aug. 22	·17	60·0	July 5	·51	48·5	Aug. 3	3·75	58·9
			31	·42	18·5	28	·33	59·2	Aug. 16	·74	48·3	22	·64	58·5
q			Aug. 2	·54	17·3				21	·59	48·5	29	·64	58·6
June 3	23·56	22·2	3	·52	18·6	**y**			28	·73	49·5			
4	·61	23·2	7	·85	17·5	June 3	25·86	54·7				μ		
11	·58	22·0	10	...	16·4	4	·79	53·4	ϵ					
23	·51	21·8	13	·57	17·9	23	·75	53·3	June 21	17·80	49·3	June 21	8·90	13·2
24	·49	22·8	21	·48	17·5	July 2	·78	54·3	July 6	·48	47·9	July 2	·75	12·0
25	·47	21·5				3	·87	53·4	Aug. 26	·80	49·3	3	·93	13·2
28	·70	22·1	**u**			29	·90	53·7	30	·34	48·0	29	·83	12·4
29	·65	22·7	June 21	43·86	26·7	30	·79	53·7				30	·88	12·9
July 4	·70	19·8	Aug. 22	·81	24·6	31	·76	53·6	ζ			31	9·01	12·6
5	·56	22·2	26	·64	25·8	Aug. 2	·88	52·7	Aug. 3	4·73	14·5	Aug. 2	8·91	11·4
17	·49	23·7	29	·81	25·2	3	·73	53·5	22	·71	13·6	3	·83	11·7
			30	·78	25·2	16	·89	53·1	29	·71	14·7	16	·87	12·3

Digitized by Google

Means of the Reduced Observations.

Star	R.A. 1889·0	Dec. 1889·0	No Obs.	II − I	Star	R.A. 1889·0	Dec. 1889·0	No Obs.	II − I
	h m s	° ′ ″				h m s	° ′ ″		
A	19 6 39·407	− 8 7 27·12	27, 28	+ 2 −12	u	19 43 43·790	− 4 48 25·34	5	+10 +16
B	14 37·294	5 37 20·46	26	+ 4 − 6	v	44 56·140	4 58 26·64	8	0 +26
a	21 25·123	5 57 19·94	6	+43 −14	w	47 27·178	4 51 32·10	13	0 0
b	23 2·486	6 24 0·48	9	+26 −13	x	48 22·279	5 19 59·23	9	+19 + 7
c	24 6·156	5 9 5·11	9	−14 − 6	y	51 25·820	4 58 53·57	11	0 + 3
d	25 17·838	5 54 12·07	5	+28 + 3	z	52 3·379	5 28 58·29	7	+29 +11
e	25 40·276	5 21 1·52	5	+26 −12	α	52 18·027	6 38 55·93	3	+17 −13
f	27 50·497	4 58 48·83	12	+17 − 3	β	52 37·923	4 39 15·73	3	−47 −13
g	28 37·639	4 41 22·53	7	+ 9 − 3	γ	54 57·286	4 36 51·60	11	−14 +10
h	29 20·695	4 33 4·80	4	+15 − 5	δ	55 39·652	6 40 48·47	5	− 8 −17
i	30 41·050	5 1 1·98	6	−20 − 8	ε	56 17·612	5 17 48·42	4	+ 7 +18
k	30 53·310	4 32 42·50	4	+30 −10	ζ	57 4·717	8 0 14·20	3	− 3 +10
l	31 22·116	3 43 18·68	5	+26 + 2	η	57 21·620	4 56 27·45	4	−30 +15
m	31 53·910	4 53 39·70	5	−10 −10	θ	59 23·747	6 53 57·14	6	− 3 −14
n	34 26·800	5 41 6·91	5	0 − 1	ι	20 0 44·800	4 44 4·06	5	−30 + 4
o	34 53·430	4 17 20·51	4	−15 −11	ι′	0 46·594	7 19 55·24	5, 6	+ 4 + 6
p	35 55·991	4 32 49·02	14, 13	+11 − 2	κ	1 3·677	8 29 58·60	3	− 3 +10
q	39 23·613	4 47 22·10	19	− 7 −10	μ	5 8·861	9 10 12·39	9	−19 + 1
r	41 59·365	3 56 0·20	4	− 5 +10	C	14 31·529	6 42 28·21	8	−31 − 1
s	41 53·293	5 30 21·73	3	+ 3 +37	D	19 55·048	3 9 35·17	5, 6	− 2 +13
t	43 4·435	4 46 17·53	19, 20	+ 5 − 3					

The mean error of a reduced observation is found—

for the reference stars : in R.A. $\pm$ 0ˢ·087 (65 observations) ; in Dec. $\pm$ 0″·68 (66 observations).
„ comparison „ „ 0·096 (259 „) „ 0·70 (261 „).

or without distinction between the stars $\pm 0^s\cdot094$ and $\pm 0''\cdot70$ from 324 and 327 observations. If the day corrections had not been applied, the mean error would have been $\pm 0^s\cdot101$, $\pm 0''\cdot68$; $\pm 0^s\cdot117$, $\pm 0''\cdot78$; or from all stars $\pm 0^s\cdot114$, $\pm 0''\cdot76$. By the introduction of the day corrections, the sums of the squares were reduced from 3·6468 to 2·2256, and from 163·28 to 123·00.

Observations with the "Cercle Méridien du Jardin."

1889	α	δ (south)	1889	α	δ (south)	1889	α	δ (south)	1889	α	δ (south)	1889	α	δ (south)
A	s	″	A—*cont.*	s	″	A—*cont.*	s	″	B	s	″	B—*cont.*	s	″
July 1	39·28	27·5	July 12	39·37	27·5	Aug. 2	39·44	27·4	July 1	37·38	21·3	July 29	37·34	20·1.
2	·34	27·7	17	·38	27·7	3	·37	27·0	2	·32	20·3	30	·28	19·4
3	·39	27·5	29	·45	27·1	5	·45	27·7	3	·35	20·1	31	·34	20·6
5	·38	27·5	30	·43	27·0	7	·32	27·1	5	·34	21·6	Aug. 2	·34	20·1
6	·40	26·6	31	·41	27·0	13	·32	28·0	6	·30	20·1	3	·29	20·4
8	·39	26·9							12	·25	20·4	7	·24	19·6
									17	·23	20·6	13	·30	20·9

Digitized by Google

1889	α	δ (south)
a	s	″
July 17	25·10	20·4
29	·25	20·2
30	·18	20·0
b		
July 2	2·45	60·1
3	·51	59·8
5	·67	59·9
6	·73	59·0
12	·46	59·7
c		
July 17	6·19	4·7
Aug. 2	·21	3·5
10	·18	5·6
d		
July 29	17·91	11·9
30	·93	11·2
Aug. 3	·90	11·9
7	·95	10·7
e		
July 12	40·27	1·6
31	·34	2·1
f		
July 2	50·48	48·1
3	·44	48·3
5	·53	48·1
6	·39	48·0
17	·46	48·3
Aug. 2	·51	47·9
g		
July 12	37·62	22·7
29	·63	21·9
30	·70	22·1
h		
July 31	20·73	5·3
i		
July 17	41·12	1·4
Aug. 10	·09	2·7
k		
July 5	53·41	43·0
6	·40	43·1
Aug. 7	·32	42·4
l		
Aug. 13	22·02	18·6
m		
July 12	54·00	40·2
n		
Aug. 2	26·83	4·4
3	·90	7·0
10	·94	7·1
o		
July 2	53·45	20·7
Aug. 7	·43	19·8
13	·51	21·0
p		
July 3	56·06	49·3
5	·03	47·6
6	55·90	48·6
17	56·04	49·1
29	55·95	48·1
30	56·03	47·9
31	·02	49·0
q		
July 2	23·54	22·5
3	·69	22·2
5	·64	21·6
6	·65	22·0
17	·65	22·1
Aug. 2	·64	21·0
r		
July 29	59·55	59·4
30	·47	59·5
Aug. 3	·46	60·4
s		
July 31	53·22	21·3
Aug. 2	·22	20·4
13	·20	21·8
t		
July 2	4·39	17·8
3	·39	17·6
5	·49	17·4
6	·51	18·1
12	·44	17·9
Aug. 7	·39	17·5
10	·35	18·2
u		
July 29	43·82	24·2
Aug. 3	·83	25·7
v		
July 30	56·17	26·0
31	·21	26·9
Aug. 2	·23	26·5
w		
July 2	27·15	31·8
3	·12	32·0
5	·24	31·2
6	·15	31·3
Aug. 3	·15	32·1
x		
July 29	22·35	57·9
30	·36	59·2
31	·42	59·2
Aug. 2	·36	58·9
7	·29	59·0
y		
July 12	25·83	52·4
29	·80	53·0
30	·93	53·0
31	·90	53·9
z		
Aug. 2	3·41	57·3
3	·51	57·9
α		
Aug. 7	18·05	54·5
β		
Aug. 10	38·00	16·8
γ		
July 12	57·34	51·6
29	·38	51·9
Aug. 2	·36	51·2
δ		
July 30	39·73	48·1
31	·71	48·4
Aug. 7	·65	47·7
ε		
Aug. 3	17·73	48·6
η		
Aug. 2	21·71	27·0
θ		
July 12	23·77	56·7
29	·81	56·1
ι		
Aug. 2	44·86	3·1
7	·89	3·8
ι′		
July 30	46·71	54·6
31	·71	55·1
Aug. 3	·76	54·5
κ		
July 29	3·70	59·0
Aug. 10	·69	59·9
μ		
July 30	8·91	11·0
31	·97	11·9
Aug. 2	·86	11·7
3	·93	11·9
7	·85	11·2
C		
Aug. 7	31·43	27·9
D		
Aug. 7	55·06	34·3

Digitized by Google

Day Corrections.

1889	$\Delta\alpha$	$\Delta\delta$	No. Stars	Later Values		1889	$\Delta\alpha$	$\Delta\delta$	No. Stars	Later Values	
	s	″		s	″		s	″		s	″
July 1	+0·01·	+0·5·	2	...	...	July 30	−0·01	−0·3	13	−0·017	−0·34
2	+0·03	+0·2	8	+0·045	+0·41	31	−0·02	+0·3	11	−0·022	+0·29
3	0·00	+0·2	8	+0·004	+0·30	Aug. 2	0·00	−0·4	13	+0·004	−0·54
5	−0·05	0·0	9	−0·043	+0·09	3	0·00	+0·3	10	−0·013	+0·32
6	−0·01	−0·1	9	−0·009	−0·03	5	[−0·07	+0·4]	1	...	...
8	[−0·01	−0·3]	1	...	...	7	+0·04	−0·3	10	+0·050	−0·30
12	+0·03	+0·0·	9	+0·012	+0·37	10	+0·01	+0·7	5	+0·023	+0·87
17	+0·01	+0·2	8	+0·029	+0·37	13	+0·01	+0·6	4	+0·054	+0·65
29	−0·01	−0·2	13	−0·023	−0·19						

Means of the Reduced Observations.

Star	R.A. 1889·0	Dec. 1889·0	No. obs.	II − I	Star	R.A. 1889·0	Dec. 1889·0	No. obs.	II − I
	h m s	° ′ ″				h m s	° ′ ″		
A	19 6 39·385	− 8 7 27·25	16	+ 5 + 5	u	19 43 43·820	− 4 48 24·90	2	− 5 + 5
B	14 37·308	5 37 20·31	14	− 2 + 9	v	44 56·193	4 58 26·63	3	− 7 −13
a	21 25·173	5 57 20·30	3	− 7 −10	w	47 27·158	4 51 31·58	5	− 2 +12
b	23 2·567	6 23 59·63	5	+ 2 + 7	x	48 22·354	5 19 59·02	5	− 6 −22
c	24 6·200	5 9 4·43	3	+10 +17	y	51 25·862	4 58 53·08	4	− 3 + 2
d	25 17·925	5 54 11·55	4	+ 5 −15	z	52 3·460	5 28 57·65	2	0 − 5
e	25 40·312	5 21 1·60	2	+ 7 +25	α	52 18·08	6 38 54·8	1	...
f	27 50·467	4 58 48·12	6	+ 7 − 2	β	52 38·01	4 39 16·1	1	...
g	28 37·655	4 41 22·33	3	+ 5 −13	γ	54 57·367	4 36 51·70	3	+ 7 −10
h	29 20·71	4 33 5·0	1	...	δ	55 39·697	6 40 48·17	3	− 3 − 7
i	30 41·115	5 1 1·60	2	+10 +45	ϵ	56 17·73	5 17 48·3	1	...
k	30 53·370	4 32 43·00	3	−10 −20	η	57 21·71	4 56 27·4	1	...
l	31 22·03	3 43 18·0	1	...	θ	59 23·800	6 53 56·40	2	+10 0
m	31 54·03	4 53 40·0	1	...	ι	20 0 44·890	4 44 3·80	2	+15 −35
n	34 26·893	5 42 5·97	3	+ 3 +23	ι'	0 46·717	7 19 54·63	3	−13 + 7
o	34 53·487	4 17 20·33	3	+27 +17	κ	1 3·695	8 29 59·20	2	0 +25
p	35 55·993	4 32 48·52	7	− 7 − 2	μ	5 8·904	9 10 11·62	5	− 6 −12
q	39 23·633	4 47 21·90	6	− 2 0	C	14 31·46	6 42 28·2	1	...
r	40 59·487	3 55 59·83	3	− 3 − 3	D	19 55·09	3 9 34·6	1	...
s	41 53·210	5 30 21·03	3	0 +17					
t	43 4·430	4 46 17·67	7	+10 +13					

The mean error of a reduced observation is found—

for the reference stars, from 30 observations: in R.A. $\pm$ 0^s·042; in Dec. $\pm$ 0″·40

„ comparison stars, from 107 observations: „ 0·051 „ 0·43

from all 137 observations of the 31 stars observed more than once: in R.A. $\pm$ 0^s·049; in Dec. $\pm$ 0″·42. The sum of the squares is reduced by the day corrections from

Digitized by Google

0·2889 and 30·87 to 0·2191 and 16·27; the mean error would have been without them: for reference stars $\pm 0^s\cdot047$ $\pm 0''\cdot49$; for comparison stars $\pm 0^s\cdot054$ $\pm 0''\cdot56$; from all stars $\pm 0^s\cdot052$ $\pm 0''\cdot54$.

The observations with this instrument were all made by the same observer, M. Renan.

PULKOWA.

Results of observations with the Repsold Meridian-Circle, communicated by Hr. Romberg.

Observations of the Reference Stars, and of the Standard Stars p and t.

1889	A		B		C		D		p		t		Day Correction			Later Values	
	$19^h\ 6^m$	$-8°\ 7'$	$19^h\ 14^m$	$-5°\ 37'$	$20^h\ 14^m$	$-6°\ 42'$	$20^h\ 19^m$	$-3°\ 9'$	$19^h\ 35^m$	$-4°\ 32'$	$19^h\ 43^m$	$-4°\ 46'$	$\Delta\alpha$	$\Delta\delta$	No. Stars		
	s	"	s	"	s	"	s	"	s	"	s	"	s	"		s	"
June 23	39·33	28·64	...	...	...	...	...	...	...	...	...	...	+0·09	+ 0·6	7	...	...
24	·33	27·65	...	...	...	...	...	...	...	...	...	...	...	...	...	...	...
26	·40	28·04	...	...	...	...	...	...	56·18	49·2	...	...	0·00	− 0·6	11	...	...
27	·41	27·81	...	...	...	...	...	...	...	...	...	...	+0·06	− 0·2	13	...	...
28	·30	28·54	...	...	...	...	...	...	...	...	...	...	0·00	− 0·1	12, 11	...	...
29	·37	27·59	...	...	...	...	...	...	55·89	50·9	4·33	18·5	+0·05	+ 0·5	12	...	...
30	·56	27·90	...	...	...	...	...	...	·90	51·5	·34	20·1	−0·02	+ 0·2	12	...	...
July 5	·33	28·10	...	...	...	...	...	...	·97	48·6	·38	17·9	0·00	− 0·4	11	+0·008	−0·38
7	·52	26·66	...	...	...	...	...	...	56·00	50·4	·53	19·8	−0·04	− 0·3	12, 11	...	...
8	·45	28·13	...	...	...	...	...	...	...	...	...	...	0·00	− 0·6	11, 10	+ 9	−0·63
10	·45	27·59	...	...	...	...	...	...	55·92	49·4	·51	18·6	−0·00	− 0·1	12	− 20	−0·03
11	·38	27·91	...	...	...	...	...	...	·97	51·4	·54	18·3	+0·02	+ 0·0	8	+ 14	+0·22
14	·61	28·24	...	...	...	...	...	...	...	...	...	...	−0·03	+ 0·2	8	− 5	+0·42
15	·41	26·91	...	...	...	...	...	...	...	...	...	...	−0·04	− 1·0	8, 7	− 41	−1·04
19	·31	28·19	...	...	...	...	...	...	...	...	...	...	+0·02	+ 0·2	12	+ 37	+0·19
20	·37	28·11	...	...	...	...	...	...	56·00	49·2	·33	17·8	0·00	− 0·7	11	+ 1	−0·81
21	·42	27·28	...	...	...	...	...	...	55·99	49·0	·31	16·1	+0·04	− 0·7	11, 10	+ 44	−0·69
23	·39	27·84	...	...	...	...	...	...	...	...	...	...	+0·02	− 0·1	12	+ 41	−0·13
26	·13	28·53	...	...	...	...	...	...	...	...	...	...	−0·03	0·0	7	...	...
30	·25	28·71	...	...	...	...	...	..	56·10	50·5	·44	19·8	0·00	+ 0·9	11	+ 10	+0·91
Aug. 2	·40	28·22	...	...	...	...	...	...	...	...	...	...	+0·02	+ 0·2	13	+ 38	+0·25
4	...	...	...	...	...	...	...	...	55·81	49·2	·28	18·5	+0·11	− 0·4	10	+ 97	−0·37
7	...	...	...	...	...	...	...	...	...	...	...	...	−0·08	+ 0·2	7	...	...
8	·39	28·28	...	...	...	...	...	...	...	...	...	...	−0·04	+ 0·1	11	− 38	+0·16
9	·34	28·70	...	...	...	...	...	...	...	...	...	...	+0·04	+ 0·2	12	+ 67	+0·34
10	·40	28·02	...	...	...	...	...	...	...	...	...	...	−0·05	− 0·4	10	...	...
11	·23	28·39	...	...	...	...	...	...	...	..	...	...	+0·08	+ 0·3	11	+ 122	+0·37
13	·48	28·08	...	...	...	...	...	...	·94	49·9	·50	19·6	−0·02	+ 0·1	12	− 21	+0·20
14	...	...	...	...	...	...	...	...	·98	49·5	·48	19·4	−0·03	+ 0·2	8	...	...
17	·41	27·56	...	...	...	...	...	...	56·06	49·2	·28	18·1	−0·02	− 0·5	11	− 34	−0·61

Digitized by Google

1889	A		B		C		D		p		t		Day Correction			Later Values	
	$19^h\ 6^m$	$-8°\ 7'$	$19^h\ 14^m$	$-5°\ 37'$	$20^h\ 14^m$	$-6°\ 42'$	$20^h\ 19^m$	$-3°\ 9'$	$19^h\ 35^m$	$-4°\ 32'$	$19^h\ 43^m$	$-4°\ 46'$	$\Delta\alpha$	$\Delta\delta$	No. Stars		
	s	″	s	″	s	″	s	″	s	″	s	″	s	″		s	″
Aug. 18	...	...	...	...	...	...	...	...	55·89	49·4	...	...	0·00	+ 0·3	6	...	...
19	29·37	27·23	...	...	...	...	...	...	...	...	...	...	−0·01	+ 0·5	9	−0·002	+0·54
20	·44	28·45	...	...	...	...	...	...	·91	49·8	4·41	17·5	−0·01	− 0·1	11	− 46	+0·10
22	·57	27·40	...	...	...	...	...	...	·93	51·6	·57	19·2	−0·02	+ 0·5	10, 9	− 51	+0·72
23	·48	26·12	...	...	...	...	...	...	...	...	...	...	0·00	+ 0·4	5	...	...
24	·34	27·67	37·21	21·8	...	...	...	...	...	...	...	...	+0·07	− 0·2	5, 4	...	...
27	...	...	...	20·0	...	...	...	...	56·11	50·9	·49	18·7	0·00	+ 0·2	4, 5	− 30	+0·31
28	·40	28·36	·34	21·1	31·60	28·8	55·00	35·6	55·92	50·8	·44	19·9	+0·00	+ 0·4	10	0	+0·53
29	·46	28·41	·42	21·9	·35	30·0	·09	35·8	56·08	50·7	·46	19·8	+0·00	+ 0·6	11	− 23	+0·69
Sept. 2	·36	28·15	·27	21·9	·44	28·9	·00	35·8	55·99	49·6	·43	18·5	−0·01	− 0·3	11, 10	− 31	−0·25
3	·34	29·52	·39	21·8	·55	28·6	·08	34·8	·97	49·9	·46	19·1	−0·06	0·0	12	− 66	+0·13
5	·53	27·37	·37	21·2	·51	28·4	54·98	35·4	56·01	51·7	·40	19·3	+0·02	+ 0·2	12	+ 22	+0·33
7	·40	27·28	·48	20·4	...	...	...	...	·08	49·9	·56	18·4	−0·05	− 0·4	7	− 70	−0·30
14	...	27·86	·20	21·0	...	...	...	...	...	...	·38	18·8	+0·04	− 0·2	5	...	...
15	·51	29·02	·33	21·0	·41	28·9	55·01	35·8	...	...	·39	18·9	+0·01	− 0·2	11	+ 8	−0·12
18	·44	28·48	·21	21·7	·59	29·8	54·94	35·4	...	...	...	...	−0·01	+ 0·6	10	+ 5	+0·67
22	·35	27·83	·40	20·0	·54	28·9	55·03	35·8	...	50·4	...	...	−0·02	− 0·2	8, 9	− 19	0·00
24	·38	28·10	·24	20·8	...	...	...	...	...	...	...	...	−0·07	+ 0·1	6	− 70	+0·25
28	·32	27·93	...	...	...	...	...	...	...	...	...	...	0·00	+ 0·2	5, 4	...	...
30	·41	28·09	...	...	...	...	...	...	55·99	49·6	·37	...	+0·03	− 0·3	5	...	...
Oct. 2	...	...	...	...	...	...	...	...	...	48·8	·46	19·0	[−0·03]	− 0·5	1, 2	...	...
3	·40	28·46	...	...	...	...	...	...	56·07	48·9	·55	18·4	−0·10	− 0·1	4, 5	− 135	−0·01
4	·44	28·26	...	...	...	...	...	...	...	...	...	...	−0·06	+ 0·4	3	− 72	+0·50
5	·36	28·72	...	...	...	...	...	...	...	...	...	...	−0·09	+ 0·2	2	− 78	+0·28

Observations of Comparison Stars.

1889	α	δ (south)	1889	α	δ (south)	1889	α	δ (south)	1889	α	δ (south)	1889	α	δ (south)
a	s	″	b	s	″	c	s	″	d	s	″	e	s	″
June 23	25·08	21·9	July 5	2·45	1·8	July 19	6·24	6·5	July 7	17·93	11·8	June 27	40·19	2·6
26	·21	22·3	7	·41	0·8	20	·24	6·9	11	·67	13·7	28	·08	...
27	24·99	20·8	8	·47	59·2	21	·16	6·4	Aug. 4	·70	12·4	30	·30	1·6
28	25·10	22·3	10	·50	1·1	23	·21	6·2	8	·95	13·5	July 8	·34	...
29	·18	21·1	11	·26	0·6	30	·08	7·1	9	·86	14·3	10	·31	2·0
30	·16	21·8	14	·43	0·2	Aug. 2	·05	6·9	Sept. 3	·86	14·3	14	·05	3·5
Sept. 2	·08	19·5	Sept. 5	·38	1·7	10	·15	5·2	5	·81	13·6	21	39·97	1·6
3	·30	22·0	7	·37	59·7	11	·22	6·7	7	·94	13·6	23	40·12	2·7
						13	·18	4·0	15	·90	13·5	30	·31	3·7
						Sept. 2	·20	5·3	18	·94	14·2	Aug. 2	·13	1·7
									22	18·12	12·2	Sept. 28	·26	2·5
									24	·06	13·1	30	·12	1·4
												Oct. 3	...	2·6
												4	·25	4·0
												5	·41	2·3

Digitized by Google

1889	α	δ (south)	1889	α	δ (south)	1889	α	δ (south)	1889	α	δ (south)	1889	α	δ (south)
f	s	″	**i**—*cont.*	s	″	**n**	s	″	**s**	s	″	**x**	s	″
June 26	50·38	48·4	Aug. 9	41·09	1·9	June 23	26·79	8·3	July 23	53·14	23·2	June 27	22·32	1·5
27	·24	49·6	10	·14	1·4	26	·79	8·1	Aug. 2	·22	23·1	July 14	·37	59·7
28	·42	48·9	11	·11	3·7	27	·78	6·3	9	·09	22·8	30	·28	1·1
29	·44	50·9	19	·12	2·9	July 8	·80	7·5	11	·09	23·9	Aug. 2	·22	1·0
July 5	·48	48·7	28	·01	3·2	23	·80	7·8	19	·28	23·2	4	·31	1·4
15	·48	48·8	Sept. 14	·17	3·1	26	·68	6·0	24	·17	21·4	8	·21	58·9
19	·38	49·7	15	40·92	1·5	Aug. 9	·79	8·2				9	·27	0·3
20	·34	48·3	18	·95	3·1	10	·95	6·5				10	·34	59·8
21	·35	...				11	·59	9·0	**u**			11	·20	0·1
23	·32	48·4	**k**			19	·82	8·6				13	·44	0·7
Aug. 28	·49	50·2							June 28	43·88	24·8	19	·22	0·2
Sept. 14	·42	...	June 23	53·26	45·3	**o**			Aug. 2	·60	27·5	23	·31	0·7
15	·49	48·9	26	·24	42·0				7	·66	26·9			
18	·38	50·5	27	·20	42·7	June 28	53·56	20·9	8	·82	25·5			
22	·25	50·3	29	·25	44·5	July 15	·57	20·4	9	·67	25·6	**y**		
24	·46	48·8	30	·37	44·0	19	·29	22·5	11	·64	24·9	June 30	25·76	54·1
			July 19	·29	43·2	Aug. 2	·43	22·6				July 11	·89	54·6
			20	·37	42·7	7	·71	21·2				14	·94	54·2
g			21	·33	42·9	8	·39	21·5	**v**			15	·88	52·2
July 7	37·74	...	Aug. 24	·22	43·7				June 23	56·06	28·2	20	·75	53·0
30	·47	25·0	Sept. 2	·45	44·1	**q**			24	55·97	27·0	21	·83	54·1
Aug. 2	·61	23·7				June 30	23·66	23·8	26	56·12	26·5	23	·86	55·0
20	·53	24·7	**l**			July 5	·40	21·8	27	·06	26·3	Aug. 8	·87	56·7
22	·74	23·4	June 28	21·98	19·1	7	·71	22·4	July 8	·07	26·6	20	·97	54·7
27	·54	24·1	July 7	22·00	17·8	10	·55	23·1	19	·14	27·1	28	·81	54·7
29	·47	24·0	10	21·86	19·2	11	·57	22·3	26	·24	26·7	29	·86	55·0
Sept. 28	·59	24·0	Aug. 8	22·24	18·9	19	·55	22·6	Aug. 10	·13	26·8	Sept. 7	·84	53·8
30	...	22·9	13	21·97	19·3	30	·59	23·5	19	·13	27·5			
Oct. 3	·83	24·1	17	22·18	19·4	Aug. 2	·54	23·0	24	·00	...			
4	·70	23·3				4	·55	23·4	Sept. 18	·18	27·5	**z**		
						9	·64	23·9				July 19	3·36	60·7
			m			11	·30	23·1				30	·33	60·6
h			July 8	53·87	37·7	13	·69	23·0	**w**			Aug. 2	·38	59·4
June 29	20·76	7·6	15	54·04	39·3				June 29	26·89	33·9	9	·27	59·9
July 10	·64	6·2	26	·28	41·3	**r**			30	27·08	33·9	10	·49	59·8
19	·76	5·2	Aug. 4	53·84	38·6	June 23	59·15	1·3	July 5	·18	32·2	11	·31	59·2
20	·78	4·8	7	·95	40·4	27	·41	0·0	7	26·98	33·6	13	·40	60·3
Aug. 13	·68	6·1	14	54·21	39·4	28	·49	59·7	19	27·13	32·7	Sept. 3	·41	58·5
17	·78	4·5	18	53·89	41·2	29	·44	59·9	20	·03	32·3	5	·25	60·7
			20	·91	41·5	July 8	·39	0·5	21	·12	33·2	14	·23	58·4
			22	·98	40·1	15	·46	59·9	23	·15	33·1	15	·38	58·9
i			27	·86	41·2	Aug. 8	·58	1·7	Aug. 14	·15	33·7	18	·47	60·0
July 5	41·27	3·4	29	·93	41·4	10	·59	1·2	17	·17	32·6	22	·43	59·7
15	·14	...	Sept. 3	54·03	39·0	14	·59	0·7	20	·02	31·8	24	·53	60·9
23	·06	2·7	5	53·91	40·0	15	·48	0·2	22	26·92	34·6	28	·51	...

Digitized by Google

1889	α	δ (south)	1889	α	δ (south)	1889	α	δ (south)	1889	α	δ (south)	1889	α	δ (south)
α	s	"	δ—*cont.*	s	"	ζ—*cont.*	s	"	ι	s	"	λ—*cont.*	s	"
Aug. 4	18·13	56·2	Aug. 2	39·76	49·1	Aug. 29	4·83	15·2	June 26	44·57	3·4	Aug. 9	45·66	32·5
7	·36	56·5	4	·60	48·7	Sept. 3	·91	14·5	27	·81	5·1	10	·79	33·3
17	·04	54·6	7	·70	50·8	5	·54	14·4	29	·70	5·4	11	·75	33·6
18	·33	57·1	8	·73	50·6	17	·80	14·5	30	·85	4·1	13	·84	33·1
29	17·99	56·3	17	·75	49·5	18	·76	15·8	July 5	·65	3·6	14	·79	33·6
Sept. 2	18·25	54·8	18	·65	50·5				7	·84	4·7	17	·82	32·7
			ε			η			Sept. 3	45·00	4·1	18	·67	32·4
β			June 23	17·52	48·4	June 30	21·70	27·9	5	44·85	4·5	19	·86	34·5
July 10	38·20	16·8	26	·57	46·9	July 8	·59	26·8				20	·79	33·2
Aug. 14	·13	18·1	27	·49	48·0	14	·56	29·3				22	·86	...
19	·00	18·4	28	·73	48·2	Aug. 13	·65	29·3	κ			Sept. 15	·65	32·3
20	·24	15·8	29	·51	49·6	20	·79	29·1	June 28	3·55	59·5			
22	·06	15·9	July 5	·73	48·2	22	·61	30·1	July 8	·62	59·6	μ		
23	·08	17·7	7	·65	47·6	23	·67	29·8	10	·68	59·4	June 26	8·97	13·1
			10	·53	48·4	Sept. 2	·77	...	14	·63	60·6	27	·77	13·2
γ			15	·61	47·9	15	·80	28·0	26	·63	58·4	28	·89	12·9
June 26	57·40	51·9	20	·64	48·3	22	·67	27·9	Aug. 7	·70	58·9	30	·85	12·8
27	·21	52·1	21	·64	48·6	θ			9	·61	60·3	July 5	·83	12·7
28	·31	53·8	26	·69	48·8	July 19	23·69	57·5	13	·65	60·0	7	·92	13·8
29	·26	52·3	Sept. 24	·79	49·0	20	·81	54·8				8	·95	12·8
July 7	·19	51·9	28	·56	49·3	23	·65	57·0				10	·95	13·6
8	·24	53·3	30	·60	49·2	30	·76	58·6	λ			14	·92	13·2
			ζ			Aug. 2	·70	57·1	July 23	45·61	33·0	21	·82	11·8
δ			Aug. 9	4·64	15·2	4	·40	57·0	30	·82	33·6	26	9·06	13·9
July 11	39·75	49·4	10	·63	13·9	8	·60	55·6	Aug. 2	·82	33·2	Aug. 17	8·92	13·0
14	·61	51·0	11	·65	14·9	14	·51	56·9	4	·75	32·2	20	·93	13·0
19	·61	50·0	19	·69	15·9	17	·65	56·6	7	·91	32·6	22	·88	15·1
23	·74	48·4	23	·65	15·5	18	·83	57·0	8	·90	33·5	23	·84	15·3

The observations were generally referred to the stars λ and θ Aquilæ, a^2 Capricorni, and 20 Aquilæ = **A**, the places of the first three being taken from the Berlin ephemeris, while for 20 Aquilæ a place determined by the circle and referred to the *Berliner Jahrbuch* system was used. Only exceptionally some other *Berliner Jahrbuch* stars, ν Ophiuchi, η Serpentis, δ and η Aquilæ and ε Aquarii, were employed as zero-stars. The instrument remained in the same position during the observations, but in those of the comparison stars for one-half of the observations the preceding and for one-half the following division of the circle was read under the four, sometimes under two, microscopes, with the exception of the two standard stars *p* and *t*, whose observations were equally distributed over three divisions.

No intimation had been received relative to the employment of the reference stars, but it happened that the star **A** was selected and used as a zero-star, and its observed positions could be restored from the data communicated by Hr. Romberg as they are given in the first table; **B**, **C**, and **D** were sometimes observed with the other stars during the last weeks of observation.

Digitized by Google

Clock-error and equator-point were assumed constant throughout the zone for each evening, the clock rate always being small, and no decided variation being indicated in any evening's observations in either of the two co-ordinates. The observations however are reported generally difficult and unsatisfactory, the images generally being unsteady and often very diffused. The *Victoria* zone was very unfavourably situated for observation in the high latitude of Pulkowa; in the beginning of June, when the observations were supposed to begin, the sun rose when the middle of the zone passed the meridian, and only after ten days of fruitless trials the brightest of the stars were seen on June 23; the planet could not be observed before July 5, after some cloudy days.

The day corrections made use of were derived from comparison of all the 41 observed stars with the first means of the Pulkowa places; the results are given in the first table. The reductions afterwards derived within the Pulkowa system from normals are given for comparison. With some few exceptions the latter are satisfactorily accordant with those used for the stars. Three isolated observations, June 24, August 15, and September 17, and the single Right Ascension observed October 2, were used without reduction in the formation of the second means. These are contained in the following table:—

Star	R.A. 1889·0	Dec. 1889·0	No. obs.	II — I		Star	R.A. 1889·0	Dec. 1889·0	No. obs.	II — I	
	h m s	° ′ ″					h m s	° ′ ″			
A	19 6 39·392	— 8 7 28·01	47, 48	— 5	0	u	19 43 43·715	— 4 48 25·72	6	+ 5	+18
B	14 37·315	5 37 21·08	12, 13	−35	+ 2	v	44 56·113	4 58 27·00	11, 10	+13	0
a	21 25·151	5 57 21·45	8	+11	+ 5	w	47 27·067	4 51 33·23	12	− 3	−13
b	23 2·399	6 24 0·79	8	−11	−19	x	48 22·304	5 20 0·29	12	+14	+16
c	24 6·183	5 9 6·17	10	+13	− 7	y	51 25·847	4 58 54·46	12	− 8	−16
d	25 17·887	5 54 13·37	12	− 8	− 7	z	52 3·383	5 28 59·66	15, 14	+ 3	+14
e	25 40·199	5 21 2·32	14, 13	− 1	+18	α	52 18·184	6 38 55·93	6	+ 4	− 3
f	27 50·401	4 58 49·43	16, 14	+ 6	−13	β	52 38·106	4 39 16·88	6	−14	+22
g	28 37·609	4 41 23·67	10	−11	+23	γ	54 57·280	4 36 52·75	6	+10	−20
h	29 20·737	4 33 5·82	6	+ 7	−12	δ	55 39·692	6 40 49·78	10	+ 2	+ 2
i	30 41·097	5 1 2·62	11, 10	+ 7	+ 8	ϵ	56 17·623	5 17 48·63	15	+ 3	−23
k	30 53·328	4 32 43·63	10	+28	−13	ζ	57 4·712	8 0 14·74	10	+ 2	+26
l	31 22·017	3 43 19·08	6	−23	−13	η	57 21·669	4 56 28·64	10, 9	−11	+16
m	31 53·967	4 53 40·07	13	−13	+ 3	θ	59 23·668	6 53 56·79	10	+ 8	+ 1
n	34 26·799	5 42 7·65	10	+19	− 5	ι	20 0 44·785	4 44 4·44	8	+ 5	− 4
o	34 53·472	4 17 21·58	6	−18	− 8	κ	1 3·618	8 29 59·59	8	−12	+ 1
p	35 55·983	4 32 50·05	26, 28	− 7	− 5	λ	2 45·781	7 20 32·95	17, 16	+ 1	+15
q	39 23·580	4 47 22·91	12	+20	+ 9	μ	5 8·895	9 10 13·50	15	−15	−15
r	40 59·462	3 56 0·59	10	+ 2	− 9	C	14 31·491	6 42 28·89	8	− 9	+ 1
s	41 53·202	5 30 22·78	6	+37	+12	D	19 55·008	3 9 35·41	8	−12	+14
t	43 4·428	4 46 18·81	27, 26	− 2	− 1						

Digitized by Google

The mean error of a reduced observation is $\pm 0^{s}\cdot093$ (from 485 observations) $\pm 0''\cdot76$ (from 479 observations ; the Dec. of **B**, Aug. 27, was accidentally omitted). No very decided difference appears between the mean error for stars of different brightness ; the mean errors are :—

from	75 and 76	observations of the reference stars		$\pm 0^{s}\cdot090$	$\pm 0''\cdot64$
,,	64 ,, 63	,,	,, 5 other stars to mag. 6·7	0·083	0·80
,,	346 ,, 340	,,	,, stars from mag. 7·0 downwards	0·095·	0·78·

VIENNA.

Observatory of Hr. von Kuffner at Ottakring. The following observations were made with the $4\frac{1}{4}$-inch Repsold Meridian-Circle by Drs. Herz and Oppenheim, and communicated by the former.

1889		Circle	Obs.	Micr.	A		B		C		D	
					s	″	s	″	″	″	s	″
June	18	W	H	O	39·420	28·35	37·331	22·30	31·629	25·71	55·031	34·65
	25	,,	H	H	...	...	·325	21·69	·611	29·78	·192	36·31
July	11	,,	H	H	·481	28·56	·387	21·89	·577	28·86	·121	35·81
	25	,,	O	H	·509	28·70	·355	22·07	·530	30·89	·069	36·38
Aug.	9	,,	O	O	·491	28·36	·399	21·20	·633	29·01	·205	36·52
	19	,,	H	O	·431	27·24	·307	20·84	·584	28·64	...	...
Sept.	14	E	O	O	·428	26·20	·338	19·90	·600	28·31	·152	34·75
Oct.	3	,,	O	O	...	...	...	...	...	...	...	...
	5	,,	H	O	...	...	...	...	...	...	...	...

1889	α	δ (south)	1889	α	δ (south)	1889	α	δ (south)	1889	α	δ (south)	1889	α	δ (south)
a			**e**			**i**			**o**			**s**		
	s	″		s	″		s	″		s	″		s	″
June 18	25·233	21·66	June 18	40·327	1·47	July 11	41·303	1·70	July 11	53·633	21·43	June 25	53·280	22·49
July 11	·340	21·58				Aug. 19	·126	2·19	Aug. 19	·582	19·52	Aug. 19	·224	21·78
b			**f**			**k**			**p**			**t**		
June 18	2·600	56·85	June 25	50·590	51·54	June 25	53·447	45·52	June 25	56·088	50·77	June 18	4·475	17·83
July 25	·526	61·50	July 11	·575	49·95				July 25	·112	50·57	25	·538	19·08
Aug. 9	·626	61·69				**m**			Aug. 9	·031	52·17	July 11	·607	19·44
			g			June 18	53·952	41·30	19	55·997	48·43	25	·530	19·01
c			June 18	37·591	23·56	July 11	54·073	40·17	**q**			Aug. 9	·585	18·00
July 25	6·277	7·05	Aug. 19	·561	24·40				June 18	23·674	24·03			
Oct. 3	·182	...				**n**			July 25	·745	22·81			
d			**h**			June 25	26·875	8·74	Aug. 19	·582	20·52	**u**		
						Aug. 9	·997	7·76				June 18	43·892	25·66
July 11	18·040	13·63	July 25	20·795	5·76	Sept. 14	·929	7·51	**r**			25	...	23·98
Oct. 3	·022	...	Aug. 19	·691	4·86	Oct. 3	·980	7·22	Sept. 14	59·568	59·03	Oct. 5	·790	22·93

Digitized by Google

1889	α	δ (south)	1889	α	δ (south)	1889	α	δ (south)	1889	α	δ (south)	1889	α	δ (south)
ν	s	″	y	s	″	β	s	″	ζ	s	″	κ	s	″
July 11	56·233	27·52	June 18	25·884	53·87	Aug. 9	38·278	14·45	Aug. 9	5·010	13·42	July 25	3·703	58·89
25	·303	26·68	July 25	·864	54·26	19	·048	16·64	Sept. 14	4·870	15·03	Sept. 14	·707	59·20
									Oct. 5	·768	15·60	Oct. 5	·723	60·13
w			z			γ			η			λ		
June 18	27·276	32·42	July 11	3·669	59·58	June 18	57·405	52·72	July 25	21·759	29·34			
July 25	·246	32·15	Aug. 19	·496	58·82	July 25	·362	54·78	Oct. 3	·773	27·67	Aug. 19	45·789	34·93
Sept. 14	·262	32·67	Sept. 14	·578	58·09				5	·753	28·28	Sept. 14	·945	32·94
Oct. 5	·184	34·14	Oct. 5	·493	59·47	δ						Oct. 3	·930	32·24
						June 18	39·775	49·46	θ			5	·790	33·94
						Aug. 19	·745	49·76	June 18	23·858	56·91			
x			α						Aug. 19	·753	58·39	μ		
June 18	22·356	59·50	July 25	18·135	57·27	ϵ			ι			June 25	9·009	13·85
Aug. 9	·550	61·92	Oct. 3	·159	55·34	June 25	17·696	49·34	July 25	44·871	5·99	July 25	·006	12·90
19	·292	59·86	5	·046	54·85	July 25	·683	49·50	Aug. 19	·958	3·66	Aug. 19	8·930	13·45

In the column "Obs." the initial of the observer at the telescope is given; on some days the microscopes were read by the other observer. Means were taken separately for the two observers and the different positions of the instrument, whence it appeared that the Right Ascensions of Oppenheim were considerably greater than those of Herz. The mean difference for three groups was found, comparing observations in the same position of the instrument only—

from 8 stars	5·8 to 6·7, mean mag. 6·11	H. − O. = − 0·033	w. = 7·2 obs.
9	7·0 „ 8·0 „	7·71 „	− 0·044	5·7 „
8	8·1 „ 8·5 „	8·21 „	− 0·092	5·3 „

On account of the small number of observations, the formula $H.-O. = -0^{s}\cdot049 - 0^{s}\cdot0216\,(M-7\cdot0)$, which tolerably represents these means, remains affected with a considerable uncertainty, but it is confirmed by its making the difference vanish for stars between 4^{m} and 5^{m}, *i.e.*, for the time stars generally. Use, therefore, being made of this formula to reduce all the individual observations to the mean $\frac{1}{2}(H.+O.)$, the difference W. − E. was found $= +0^{s}\cdot031$ (weight = 11·4 obs.). As only a small part of the observations are made C. E., these were all reduced to C. W. by adding $+0^{s}\cdot031$. In the same manner, for the Declinations, the difference H. − O. was found $= +0''\cdot41$ (weight 18·1), and reducing the individual observations to $\frac{1}{2}(H.+O.)$ by applying a constant correction of $\mp 0''\cdot21$, the difference $\Delta\delta$ (W. − E.) was found $= -0''\cdot82$ (weight 10·6), which quantity was applied to the Declinations observed C. E.

By comparison with the means of the observations thus far reduced, the day corrections, including the reductions to the mean of both observers and for the last three days the reduction to C. W., were found :—

Digitized by Google

1889		$\Delta\alpha$	$\Delta\delta$	No. stars	$\Delta\alpha$ II. appr.	1889		$\Delta\alpha$	$\Delta\delta$	No. stars	$\Delta\alpha$ II. appr.
		s	"		s			s	"		s
June	18	− 0·006	− 0·60	17	− 0·006	Aug.	19	+ 0·036	− 0·44	18	+ 0·043
	25	− 0·020	+ 0·40	10, 11	− 0·026	Sept.	14	+ 0·030	− 0·98	10	+ 0·025
July	11	− 0·039	+ 0·02	13, 12	− 0·050	Oct.	3	+ 0·024	− 1·24	6, 4	+ 0·024
	25	+ 0·027	+ 0·43	20, 19	+ 0·032		5	+ 0·038	− 0·26	8	+ 0·039
Aug.	9	− 0·034	+ 0·16	11	− 0·040						

As the mean results for Right Ascension reduced with the corrections $\Delta\alpha$ were found to differ considerably for about the third part of the stars from the means used to determine the values $\Delta\alpha$, a second approximation was made which furnished the values given in the last column of the preceding table. Then the mean results contained in the following table were found. The average difference between these and the preceding approximation is less than $0^s\cdot003$.

Star	R.A. 1889·0	Dec. 1889·0	No. obs.	Star	R.A. 1889·0	Dec. 1889·0	No. obs.
	h m s	° ′ ″			h m s	° ′ ″	
A	19 6 39·461	− 8 7 28·14	6	u	19 43 43·892	− 4 48 24·34	2, 3
B	14 37·347	5 37 21·56	7	v	44 56·259	4 58 26·87	2
a	21 25·292	5 57 21·91	2	w	47 27·264	4 51 33·20	4
b	23 2·566	6 24 0·02	3	x	48 22·410	5 20 0·72	3
c	24 6·216	5 9 6·62	2, 1	y	51 25·887	4 58 54·15	2
d	25 18·018	5 54 13·61	2, 1	z	52 3·593	5 28 59·40	4
e	25 40·359	5 21 1·66	1	α	52 18·133	6 38 56·18	3
f	27 50·575	4 58 50·53	2	β	52 38·164	4 39 15·68	2
g	28 37·635	4 41 24·50	2	γ	54 57·396	4 36 53·83	2
h	29 20·780	4 33 5·31	2	δ	55 39·814	6 40 50·13	2
i	30 41·243	5 1 2·15	2	ε	56 17·693	5 17 49·00	2
k	30 53·455	4 32 45·09	1	ζ	57 4·879	8 0 15·04	3
m	31 53·995	4 53 41·02	2	η	57 21·781	4 56 28·79	3
n	34 26·929	5 42 8·22	4	θ	59 23·863	6 53 58·17	2
o	34 53·635	4 17 20·68	2	ι	20 0 44·952	4 44 4·83	2
p	35 56·059	4 32 50·35	4	κ	1 3·733	8 29 59·68	3
q	39 23·703	4 47 22·66	3	λ	2 45·897	7 20 34·24	4
r	40 59·559	3 56 0·01	1	μ	5 9·004	9 10 13·27	3
s	41 53·294	5 30 22·15	2	C	14 31·594	6 42 28·89	7
t	43 4·536	4 46 18·59	5	D	19 55·118	3 9 35·83	6

The mean error of a reduced observation is: in R.A., from 113 observations, $\pm0^s\cdot047$; in Dec., from 110 observations, $\pm1''\cdot04$; or distinguishing the two classes, for the reference stars $\pm0^s\cdot044 \pm0''\cdot86$ (26 observations); for the comparison stars $\pm0^s\cdot048 \pm1''\cdot11$ (87 and 84 observations).

Digitized by Google

WASHINGTON.

Some observations of *Victoria* and the stars were made with the large Martins Transit-Circle, and apparent places communicated by the Superintendent of the Observatory. From them the following mean places, 1889·0, were computed by Dr. Lamp.

1889	α	δ (south)	1889	α	δ (south)	1889	α	δ (south)	1889	α	δ (south)	1889	α	δ (south)
a	s	′	i	s	″	s	s	″	y	s	″	ϵ	s	″
July 8	25·28	22·3	July 16	41·19	...	Aug. 29	53·39	23·7	Aug. 26	26·04	53·0	Aug. 16	17·76	45·8
Aug. 12	·26	21·3										29	·69	48·5
16	·30	22·2												
29	·25	20·3	k			t			z			η		
			July 8	53·50	44·6	July 8	4·62	20·1	Aug. 27	3·52	0·0	July 8	21·89	29·6
			Aug. 12	·45	43·2	16	·54	18·2				Aug. 27	·77	27·7
b			21	·49	44·1	Aug. 12	·58	18·2						
Aug. 26	2·54	0·5	29	·43	43·9	16	·59	18·8	α					
27	·50	0·6				21	·54	18·0	Aug. 29	18·22	56·9	θ		
						26	·64	17·8				Aug. 12	23·95	59·8
			l			27	·53	19·6				16	·94	57·9
			Aug. 26	22·23	18·8	29	·60	18·8	—4° 4982					
c									July 16	19·36	10·9			
July 16	6·28	5·7							Aug. 12	·53	11·8			
Aug. 12	·29	5·4	p						21	·29	12·7	ι		
			July 8	56·12	49·8	u						Aug. 26	44·95	2·7
			16	·09	49·7	July 8	43·96	26·1						
d			Aug. 12	·05	48·2	Aug. 21	·85	25·9	β			ι'		
July 8	18·09	12·3	16	·16	48·7				July 16	38·11	15·6	Aug. 21	46·69	56·7
			21	·05	50·3				Aug. 12	·06	15·0			
			26	·08	49·5				21	·01	14·6			
			27	·12	50·1	w						κ		
f			29	·06	50·1	July 8	27·35	32·3				July 16	3·73	59·3
July 16	50·49	...				16	·30	30·6				Aug. 29	·75	59·2
						Aug. 12	·36	...	γ					
			q			16	·24	31·7	July 16	57·36	51·9			
g			July 16	23·78	23·8	21	·21	30·7	Aug. 12	·52	51·7	μ		
Aug. 26	37·71	22·7	Aug. 16	·86	22·2				21	·33	52·0	July 8	9·00	18·9
												16	8·94	13·3
						x						Aug. 12	9·04	12·7
h			r			Aug. 26	22·47	59·4	δ			21	8·93	11·4
Aug. 29	20·80	6·4	Aug. 26	59·60	0·0	29	·42	61·5	Aug. 26	39·93	50·2	26	9·03	12·0

Digitized by Google

The star $-4°$ 4982 was observed with β and is retained in the table, as its observations were used in the determination of day corrections. These were found as tabulated under $\Delta\alpha$ and $\Delta\delta$.

1889	$\Delta\alpha$	$\Delta\delta$	Star	Obs.	Later values		1889	$\Delta\alpha$	$\Delta\delta$	Star	Obs.	Later values	
	s	″			s	″		s	″			s	″
July 8	−0·04	+ 0·7	8, 7	S	−0·047	+0·66	Aug. 21	+0·04	− 0·1	10	S	+0·048	−0·27
16	+0·02	+ 0·1	10, 11	E	+ 20	−0·13	26	−0·03	− 0·5	5	S	− 26	−0·45
Aug. 12	−0·02	− 0·2	11, 10	E	− 23	−0·18	27	+0·02	+ 0·1	5	H	+ 38	+0·46
16	−0·02	− 0·4	7	S	− 43	−0·39	29	+0·02	+ 0·3	7	H	+ 11	+0·50

The observers were, S = Skinner, E = Eastman, H = A. Hall, jun. The discordant declination of μ, July 8, was rejected. The means of the reduced results for the stars observed more than once become—

Star	R.A. 1889·0	Dec. 1889·0	No. obs.	II − I		Star	R.A. 1889·0	Dec. 1889·0	No. obs.	II − I	
	h m s	° ′ ″					h m s	° ′ ″			
a	19 21 25·257	−5 57 21·42	4	−13	+ 8	x	19 48 22·440	−5 20 0·55	2	− 5	−10
b	23 2·515	6 24 0·75	2	− 5	−20	...	52 19·408	4 39 11·87	3	+18	− 7
c	24 6·285	5 9 5·60	2	0	− 5	β	52 38·075	4 39 15·13	3	+15	− 3
k	30 53·469	4 32 43·78	4	− 1	+17	γ	54 57·418	4 36 51·93	3	+18	− 3
p	35 56·091	4 32 49·55	8	+ 1	0	ϵ	56 17·725	5 17 47·20	2	0	− 5
q	39 23·820	4 47 23·15	2	0	−15	η	57 21·820	4 56 28·25	2	−10	+40
t	43 4·579	4 46 18·69	8	− 1	+ 1	θ	59 23·925	6 53 59·15	2	−20	−30
u	43 43·908	4 48 25·70	2	+ 3	+30	κ	20 1 3·760	8 29 59·05	2	+20	+20
w	47 27·289	4 51 31·25	5, 4	− 1	+ 5	μ	5 8·983	9 10 12·52	5, 4	− 7	−17

The mean error of an observation is found: in R.A. from 61 observations of 18 stars $\pm 0^s·043$; in Dec. from 59 observations $\pm 0''·80$.

Digitized by Google

Combination of Results of the different Series.

The methods employed to combine the preceding results of the different series of observations to normal places of the *Victoria* stars, have been prescribed by Dr. Gill's urgent requests for the earliest possible communication of these normal places, combined with the fact that the results were communicated at very different intervals. Some of the results were received soon after the observations were completed in 1889, the last were not communicated till May 1891. A more regular and systematic treatment would naturally have been adopted and a good deal of duplicate work avoided, if the discussion had been deferred till the whole of the material had been collected.

A comparison was first made between the Berlin and Cape results, which showed that the Right Ascensions differed largely though referred to the same system of clock stars. The mean differences B. – C., arranged in four groups, were found—

from 9 stars, mean mag. $6^{m}\cdot04$	$\Delta\alpha = -0^{s}\cdot032$	$\Delta\delta = +0''\cdot36$
„ 13 „ „ „ $7\cdot64$	$-0\cdot055$	$+0\cdot30$
„ 13 „ „ „ $8\cdot12$	$-0\cdot073$	$+0\cdot42$
„ 7 „ „ „ $8\cdot43$	$-0\cdot072$	$+0\cdot36$

As the difference in Right Ascension can be clearly traced to a magnitude equation, and the Berlin results made use of were corrected for the observer's equation, while the Cape results had not yet received a corresponding absolute correction, these latter were corrected by means of the expression $\Delta\alpha$ (B. – C.) $= -0^{s}\cdot058 - 0^{s}\cdot0175$ (M – 7·56) which is found from these four means. The difference in Declination is merely that of the systems and sensibly constant; the mean of the four partial means, or a constant correction $\Delta\delta = +0''\cdot36$, was therefore applied to the Cape Declinations to reduce them to the adopted normal system to which the Berlin determinations had been directly referred.

The Cape results employed in this comparison, and in the next formation of the means, were those of a first approximation in which no distinction had been made between the magnitude equations of the observers for stars brighter and fainter, respectively, than 7^{m}, and were not strictly accordant, therefore, with those tabulated p. 495, for the stars whose observations are unequally distributed among the three observers. Some further change would be produced by the introduction of the finally adopted magnitudes instead of the *B.D.* magnitudes which were used at this stage of the discussion. All subsequent correction however would not amount to more than a few units of the last decimal place, and may be considered practically insensible even for the preliminary normals, to which alone its influence extends.

The average remaining difference between a Berlin Right Ascension and a

Digitized by Google

Cape Right Ascension reduced by the formula, with the *B.D.* magnitude, was found $= 0^s\cdot0205$, whence the mean error of a difference is $\pm 0^s\cdot0264$. For Declination, after subtraction of the mean difference $0''\cdot36$, the corresponding numbers are: aver. diff. $0''\cdot193$; mean error $\pm 0''\cdot245$.

The simple means now were taken from the Berlin results and the Cape reduced results, which from the preceding determination would appear to be subject only to the small average mean error $\pm 0^s\cdot013$ and $\pm 0''\cdot12$. With these means the results of the remaining eight series received before March 1890 were compared. During the summer of 1890 the Leipzig observations were received and compared in the same manner, and, appearing at first sight very accurate and coming next to the Berlin and Cape places among the eleven series then in hand, their results were combined with the Berlin and Cape results after applying the constant reductions $\Delta\alpha = -0^s\cdot046$, $\Delta\delta = -0''\cdot20$, which at first appeared sufficient to produce a satisfactory agreement. Means of the three series were taken, giving equal weight to all of them.

The Leiden and the Mount Hamilton observations, which came next to hand, were compared, from an accidental reason, not with these means but with the Berlin results alone, and the provisional reductions were found: for the Leiden results, the Right Ascensions being already corrected for magnitude equation as assumed by the observers—

$$\Delta\alpha = -0^s\cdot052 - 0^s\cdot015\,(M - 8\cdot0) - 0^s\cdot0324\,(t - 19^h\,40^m)^h; \qquad \Delta\delta = +0''\cdot54$$

and for the Lick results

$$\Delta\alpha = -0^s\cdot078 - 0^s\cdot020\,(M - 8\cdot0) \qquad \Delta\delta = +0''\cdot51$$

These reductions were retained unchanged in the first determination of normals, as they appeared closely to represent the differences from the means $\frac{1}{3}$(B. + C. + Lpz.). The reason for the introduction of the more complicated formula for the Leiden Right Ascensions has been already explained. For the Lick results, the simple mean difference Berl. – Lick would be $\Delta\alpha = -0^s\cdot073$, $\Delta\delta = +0''\cdot51$, leaving the following mean deviations for the stars arranged in four groups according to brightness :—

				s	″
from	9	stars,	mean mag. 6·82	+ 0·0128	− 0·022
„	8	„	„ 7·78	+ 0·0099	− 0·059
„	11	„	„ 8·12	− 0·0133	+ 0·051
„	7	„	„ 8·43	− 0·0075	+ 0·024

The progression in the residuals for Right Ascensions, though small, seems pretty certain, the introduction of a further correction $= -0^s\cdot020(M - 7\cdot75)$ diminishing the average difference between the results of Berlin and Lick from $0^s\cdot0210$ to $0^s\cdot0182$. With the means $\frac{1}{3}$(B. + C. + Lpz.), and adding one more star in the third group which originally could not be compared, the mean deviation from the simple mean of the differences (which remains $-0^s\cdot073$) would be $+0^s\cdot0088$, $+0^s\cdot0145$, $-0^s\cdot0099$, $-0^s\cdot0106$.—

The average difference in Declination was found, after subtracting the mean $\Delta\delta$ $+0''\cdot51$, $= 0''\cdot202$.

Digitized by Google

No sensible progression with time was shown in the Right Ascension differences B. – Lick, their mean deviation from the formula given above being—

from 11 stars, a to m	+ 0ˢ·0035
„ 12 „ n „ y	— 0·0012
„ 12 „ z „ μ	— 0·0010

As a careful determination of clock-error was made in the Lick series both before and after the zone, and the variations of the instrument kept under close control by frequent observations of the level and of the meridian mark during each night's work, this close accordance between Berlin and Mount Hamilton throughout the zone afforded strong evidence that the error exhibited by the comparison Berlin – Leiden was on the Leiden side as had been previously assumed.

Adding now the reduced Lick and the corrected Leiden results to the three series previously employed, means were taken from the five series without distinction of weights, and these were used as a first approximation to normals = N_1. The seconds are given in the following table, together with the differences N_1 – adopted mean $\frac{1}{2}$ (Berl. + Cape red.).

Normals N_1,

derived from the observations at Berlin, the Cape, Leiden, Leipzig, and Mount Hamilton.

Star	α	δ	Rem.	$N_1 - \frac{1}{2}$ (B. + C. red.)		Star	α	δ	Rem.	$N_1 - \frac{1}{2}$ (B. + C. red.)	
	ˢ	′		ˢ	′		ˢ	′		ˢ	′
A	39·424	27·33	4 ser.*	−0·002	−0·03	u	43·807	25·20	...	−0·004	+0·09
B	37·330	20·38	4 ser.*	— 13	— 8	v	56·181	27·13	...	+ 5	— 13
a	25·195	20·75	...	+ 9	+ 9	w	27·173	32·29	...	+ 1	— 7
b	2·471	0·64	...	— 11	— 10	x	22·377	59·86	...	— 10	+ 9
c	6·209	5·95	...	— 10	— 1	y	25·866	53·96	...	+ 1	+ 10
d	17·916	12·53	...	— 10	— 13	z	3·490	58·88	...	+ 1	+ 7
e	40·294	2·24	...	— 8	+ 21	α	18·087	55·68	...	+ 2	+ 8
f	50·490	48·89	4 ser.*	+ 1	— 7	β	38·020	16·41	...	— 3	+ 2
g	37·605	23·24	...	+ 9	+ 1	γ	57·299	52·22	...	+ 11	+ 2
h	20·727	5·42	...	+ 14	+ 15	δ	39·738	49·01	...	+ 3	+ 15
i	41·120	2·58	...	— 7	— 10	ε	17·661	48·70	...	+ 7	— 11
k	53·376	43·48	...	+ 6	+ 10	ζ	4·766	14·30	...	+ 11	— 1
l	22·125	18·99	...	+ 14	— 16	η	21·732	28·00	...	— 19	— 7
m	53·995	39·98	...	— 5	— 3	θ	23·781	57·52	...	— 1	— 2
n	26·879	7·48	...	+ 9	— 9	ι†	44·835	4·17	...	— 5	— 36
o	53·504	20·96	...	— 24	+ 25	ι′	46·671	55·41	4 ser.‡	— 9	+ 6
p	56·000	49·31	...	— 7	0	κ	3·693	59·01	—	+ 24	+ 8
q	23·652	22·38	...	0	— 12	λ	45·809	33·02	4 ser.*	+ 6	+ 18
r	59·486	0·51	...	— 6	+ 9	μ	8·913	12·61	...	+ 3	+ 11
s	53·290	22·68	...	+ 6	— 17	C	31·511	28·41	4 ser.*	— 5	+ 8
t	4·464	18·39	...	— 1	— 11	D	55·063	35·55	4 ser.*	— 12	— 16

* Not observed at Lick observatory. ‡ Not observed at Leiden.

† The magnitude of star ι′ had been used by mistake in applying the magnitude correction to the Berlin and Cape Right Ascensions. N_1 should have been 44ˢ·841, and the difference from the correct value $\frac{1}{2}$ (B. + C.) = −0ˢ·014. The error extends as far as, but excluding, the determination of the normals N_2.

Digitized by Google

For the nine series of observations compared with the means from the Berlin and Cape results, the following mean reductions to the system of these means were found, grouping the stars according to the *B.D.* magnitudes, and forming means without distinction of weights :—

$\Delta\alpha$

No. Stars	Mean mag.	Cincinn.	Melb.	Vienna	Pulkowa	Cordoba	Paris G. I. M.	Paris C. du J.	Greenw.	Leipzig
		s	s	s	s	s	s	s	s	s
9	6·04	− 0·055	+ 0·004	− 0·028	+ 0·041	− 0·092$_8$	+ 0·039	− 0·001$_8$	− 0·013	− 0·029
13	7·64	− 0·080	− 0·014	− 0·078	+ 0·040	− 0·114	+ 0·039	+ 0·004	− 0·033	− 0·058
12	8·12	− 0·088	− 0·022	− 0·072$_{11}$	+ 0·041	− 0·099	+ 0·054	+ 0·014$_{11}$	− 0·053	− 0·047$_{13}$
7	8·43	− 0·061	− 0·035	− 0·060	+ 0·062	− 0·120	+ 0·038	− 0·013	− 0·073	− 0·040

Small figures appended to the values of $\Delta\alpha$ indicate the number of stars observed in the group when it differs from the number given in the first column.

For Cordoba the mean magnitude for the first group is 6·22.

The general means of the observed reductions, giving equal weights to all of them, were found for the two co-ordinates—

	$\Delta\alpha$	$\Delta\delta$
	s	″
Cincinnati	− 0·074	+ 0·54
Melbourne	− 0·016	− 0·96
Vienna	− 0·064	+ 0·45
Pulkowa	+ 0·044	+ 0·38
Cordoba	− 0·107	− 0·42

	$\Delta\alpha$	$\Delta\delta$
	s	″
Paris G.I.M.	+ 0·043	− 0·41
„ C. du J.	+ 0·003	− 0·66
Greenwich	− 0·041	+ 1·00
Leipzig	− 0·045	− 0·20

These general means were adopted, and applied (with an accidental difference of $0^s{\cdot}001$ and $0''{\cdot}01$ in case of Leipzig) to get the next approximation of normals, with the exception of Melbourne and Greenwich, where a well-marked progression of $\Delta\alpha$, dependent on magnitude, was distinctly evident. For these series the reductions for Right Ascension were put—

for Melbourne, R. A. reduced to mean of observers, $\Delta\alpha = -0^s{\cdot}015 - 0^s{\cdot}015\,(M - 7{\cdot}5)$

„ Greenwich, casual mean of observers, $\Delta\alpha = -0^s{\cdot}040 - 0^s{\cdot}023\,(M - 7{\cdot}5)$

The reduction here given for the Vienna Right Ascensions actually applies to results, slightly different from those given above (p. 557), which had been obtained by reducing all the observations to the mean of both observers, as has been done above in the final reduction, but assuming the difference H.—O. constant = $-0^s{\cdot}048$.

Digitized by Google

The results of those observations which were received in 1891 were compared with the normals N_1, and the following mean reductions to these were found for the four groups into which the stars were again divided :—

Oxford			Königsberg			Dublin		
st.	m. m.	$\Delta\alpha$	st.	m. m.	$\Delta\alpha$	st.	m. m.	$\Delta\alpha$
		s			s			s
5	6·38	+ 0·053	9	6·18	— 0·035	6	6·02	+ 0·003
13	7·64	+ 0·015	13	7·67	— 0·148	8	7·68	— 0·032
13	8·12	+ 0·005	12	8·10	— 0·229	9	8·16	— 0·099
7	8·43	+ 0·015	7	8·42	— 0·250			
Cambridge (E.)			**Bordeaux**			**Cambridge (M.)**		
st.	m. m.	$\Delta\alpha$	st.	m. m.	$\Delta\alpha$	st.	m. m.	$\Delta\alpha$
		s			s			s
9	6·18	— 0·022	7	6·24	+ 0·033	9	6·18	— 0·030
13	7·64	— 0·068	12	7·64	— 0·037	13	7·64	— 0·047
12	8·12	— 0·080	12	8·12	— 0·039	12	8·12	— 0·068
7	8·43	— 0·096	7	8·43	— 0·007	7	8·43	— 0·078
Washington			**Algiers**			**Naples**		
st.	m. m.	$\Delta\alpha$	st.	m. m.	$\Delta\alpha$	st.	m. m.	$\Delta\alpha$
		s			s			s
2	6·40	— 0·066	8	6·16	+ 0·018	9	6·18	+ 0·012
12	7·64	— 0·088	9	7·70	— 0·004	13	7·67	+ 0·011
10	8·11	— 0·092	9	8·11	— 0·025	12	8·12	+ 0·006
7	8·42	— 0·102	7	8·43	— 0·008	7	8·42	— 0·007

Many of the groups were only incompletely observed in these series, and in some of them the positions of several stars depend upon one single observation. Half weight has been given to these in the comparison.—

Instead of the *B.D.* magnitudes of the three brightest stars (or which **A** and **B** were found to be estimated a little, and **m** considerably too bright in *B.D.*), the corrected values are here used.

The values of $\Delta\alpha$ here tabulated for Königsberg are not those which would be found by comparison of the results derived within the observer's system (p. 517); another explanation of the large error of the Königsberg Right Ascensions was tried at first, and values differing from $-0^s{\cdot}07$ to $-0^s{\cdot}09$ from those tabulated above had been obtained and were used in this discussion. The variation depending on time was

Digitized by Google

not noticed at this stage of the discussion either for the Königsberg or for the Naples Right Ascensions, and consequently was not taken into account in the formation of the new normal means. In the Algiers series, the seven stars observed only once had been overlooked in preparing the table of results used in the general discussion. These observations consequently are missing in this comparison and the following discussion, but their results were ultimately taken into account.

A distinct progression of the value of $\Delta\alpha$ with magnitude is evident in nearly all these nine series; the reductions $\Delta\alpha$ therefore as given by the following formulæ, and the mean reductions $\Delta\delta$, were adopted. In the case of Königsberg the $\Delta\delta$ correction again is not applicable to the results tabulated p. 517, but to those of a previous reduction in which the Declinations were generally $0''{\cdot}16$ more southerly, for most of the stars very nearly to this amount; for some of those observed only once, however, they are considerably different.

Oxford	$\Delta\alpha = +$	$0^s{\cdot}012 - 0^s{\cdot}02$	(M $-$ 8·0)	$\Delta\delta = + 0''{\cdot}37$
Königsberg		$- 0^s{\cdot}214 - 0^s{\cdot}12$	,,	$+ 0''{\cdot}61$
Dublin		$- 0^s{\cdot}078 - 0^s{\cdot}05$	,,	$+ 0''{\cdot}12$
Cambridge (Eng.)		$- 0^s{\cdot}078 - 0^s{\cdot}03$	,,	$+ 1''{\cdot}30$
Bordeaux		$- 0^s{\cdot}023 - 0^s{\cdot}013$	,,	$- 0''{\cdot}09$
Cambridge (Mass.)		$- 0^s{\cdot}066 - 0^s{\cdot}028$	,,	$- 0''{\cdot}14$
Washington		$- 0^s{\cdot}092 - 0^s{\cdot}015$	,,	$+ 0''{\cdot}07$
Algiers		$- 0^s{\cdot}013 - 0^s{\cdot}02$	,,	$- 0''{\cdot}84$
Naples		$+ 0^s{\cdot}003 - 0^s{\cdot}02$	,,	$+ 0''{\cdot}34$

The Hamburg observations, which were received last, were used with the constant reductions: $\Delta\alpha = -0^s{\cdot}034$, $\Delta\delta = +0''{\cdot}84$.

The results of all the 23 series being thus approximately reduced to the same system, viz., that of the Berlin positions, new normals N_2 were formed from them, attributing approximate weights determined by the following investigation.

The determinations were divided into six classes:—

Class I: results depending on a single observation	Class IV: results depending on 5 to 9 observations
,, II: ,, ,, ,, 2 observations	,, V: ,, ,, ,, 10 to 19 ,,
,, III: ,, ,, ,, 3 or 4 ,,	,, VI: ,, ,, ,, 20 or more ,,

The means of the differences between the results of any series and the normals N_1 were determined for each class separately. The double values in the columns I, II, III, &c.,

Digitized by Google

of the following table were thus obtained, the first number of each column being the average absolute difference in Right Ascension (expressed in $0^s{\cdot}001$), and the second number the corresponding amount in Declination (expressed in $0''{\cdot}01$). The figures in brackets represent the number of stars belonging to each group.

Series of observations	Average Differences from N_1 in classes					
	I	II	III	IV	V	VI
Berlin	...	9 8 (1)	10 21 (6)	8 11 (28)	6 17 (3)	9 11 (4)
Cincinnati	...	...	39 42 (30)	29 54 (7)	21 13· (4)	...
Melbourne	...	...	16 35 (29)	22 18 (8)	...	10 14 (4)
Vienna	14 80 (3,5)	53 44 (19,16)	29 45 (13,14)	21 31 (5)	...	...
Pulkowa	...	...	...	44 19 (14,15)	28 36 (24,23)	16 23 (3)
Cape	...	...	...	18 17 (22)	10 11 (16)	12 7· (4)
Paris, G. I. M.	...	...	32 26 (11)	34 20 (21)	26 19 (7,6)	15 38 (2,3)
„ C. du J.	37 33 (8,9)	20 56 (7)	28 33 (14)	26 18 (8)	27· 57· (2)	...
Cordoba	...	6 13 (1,2)	27 37 (28,27)	29 15· (8)	...	...
Greenwich	...	27 — (1)	26 36 (28,29)	35· 30 (8)	4· 28 (2)	3· 15 (2)
Leipzig	...	...	21 25 (12)	13· 18 (20)	6 18 (6)	23· 22· (4)
Leiden	21 4 (2)	12 15 (8)	9 20 (14)	8 11 (13)	6 17· (4)	...
Mt. Hamilton	14 24 (1)	10 16 (3,2)	16 16 (21,19)	7 12 (11,14)	...	...
Oxford	...	31 44 (2)	22 26 (36)	...	...	...
Königsberg	45 85 (8,7)	24 59 (10)	34 64 (14)	31 54 (5)	61 47· (4)	...
Dublin	63 52 (10)	26 48 (5)	23 43· (6)	47· 53· (2)	...	...
Cambridge (Eng.)	...	52 48 (8,7)	29 34 (20,22)	21 40 (10)	...	15 67· (2)
Bordeaux	82 123 (7)	42 57 (10)	43 27 (17)	14 44· (4)	...	...
Cambridge (Mass.)	...	37 37 (11,9)	30 35 (18,20)	26 46 (7)	17 50 (5)	...
Washington	26 68 (14,12)	28 62 (9)	26 63· (4,6)	13 20 (4,2)	...	...
Algiers	...	16 20 (6)	53 27 (8,9)	24 24 (14,13)	19 31 (5)	...
Naples	...	29 34 (5)	11 23 (20)	10 17 (9)	11 12 (7)	...
Hamburg	47 168 (5,6)	42 84 (12)	50 54 (18,16)	38 27 (3,4)	9· 10· (2)	34 — (1)

Assuming the relative weights of the results comprised within the different classes to be expressed by the ordinal numbers of the classes, the average differences corresponding to unity of relative weight follow from the values contained in the preceding table which are given in the first column of the following table. From these are derived the specific weights of the different series given in the next column, the specific weight being put = 1 for a series in which the average amount of the differences would be $0^s{\cdot}020$ in Right Ascension, and $0''{\cdot}30$ in Declination. For Berlin, Cape, Leiden, Leipzig, and Mount Hamilton, the specific weights thus determined were further multiplied by the factor 0·81 to allow for the fact that the compared normals N_1 were the means of the results forwarded by these five series.

Digitized by Google

Series of observations	Aver. diff. reduced to class I (1 obs.)		Specific weight of the series		Mean of actually assumed weights	
	in R.A.	in Dec.	in R.A.	in Dec.	in R.A.	in Dec.
	s	"				
Berlin	0·0170	0·255	1·12	1·12	4·46	4·45
Cincinnati	0·0663	0·745	0·09	0·18	0·27	0·56
Melbourne	0·0307	0·536	0·42	0·31	1·38	1·07
Vienna	0·0581	0·698	0·12	0·18	0·27	0·43
Pulkowa	0·0692	0·631	0·08	0·23	0·37	1·03
Cape	0·0298	0·293	0·36	0·85	1·86	3·89
Paris, G. I. M.	0·0612	0·458	0·11	0·43	0·44	1·72
„ C. du J.	0·0438	0·555	0·21	0·29	0·51	0·74
Cordoba	0·0479	0·542	0·17	0·31	0·47	0·88
Greenwich	0·0462	0·612	0·19	0·24	0·64	0·80
Leipzig	0·0309	0·403	0·34	0·45	1·35	1·81
Leiden	0·0164	0·267	1·21	1·02	3·68	3·17
Mt. Hamilton	0·0222	0·253	0·66	1·14	2·06	3·61
Oxford	0·0382	0·462	0·28	0·42	0·80	1·11
Königsberg	0·0598	0·990	0·11	0·09	0·30	0·25
Dublin	0·0536	0·662	0·14	0·21	0·29	0·41
Cambridge (Eng.)	0·0525	0·705	0·15	0·18	0·68	0·60
Bordeaux	0·0670	0·658	0·09	0·21	0·21	0·49
Cambridge (Mass.)	0·0505	0·745	0·16	0·16	0·47	0·47
Washington	0·0325	0·806	0·38	0·14	0·74	0·27
Algiers	0·0537	0·473	0·14	0·40	0·48	1·37
Naples	0·0265	0·430	0·57	0·49	2·49	2·12
Hamburg	0·0702	1·050	0·08	0·08	0·21	0·20

It is unnecessary to mention specially some slight errors in these numbers, except that it is only just to remark that the specific weight of the Naples Right Ascensions is in reality considerably greater. The number here given is sensibly vitiated by the error of reduction which was afterwards detected in an observation of star **h**. This being corrected, the average difference in class III becomes $0^s{\cdot}009$ instead of $0^s{\cdot}011$, and in the last table the average difference reduced to one observation ought to be $0^s{\cdot}0249$, and the corresponding specific weight would be 0·65. This value however is still much too small from neglect of the term in the Naples Right Ascensions depending upon time. — For Cambridge, Eng., the specific weights 0·22 and 0·20 were inadvertently assumed instead of the smaller numbers of the table. None of these errors however are of practical consequence in the determination of the new normals.

The numbers adopted as representing the specific weights of the different series, multiplied by the ordinal number of the class, were assumed as weights for a result depending on the mean of the numbers of observations comprised within that class, and between these average weights for the different classes the weights of the separate

Digitized by Google

results were interpolated with the actual number of observations. The means of all weights adopted for the separate stars in each series are given in the last column of the preceding table.

The seconds of the new normals N_2, or of the means of the results of the 23 series taken with regard to the weights thus determined, are given in the following table, and with them the sum of the weights which were used, and the correction $N_2 - N_1$, being in every case the values actually adopted in this approximation, and affected with the differences in the reductions of some series and the slight accidental errors before mentioned.

Star	Corr. $N_2 - N_1$		Normals N_2				Star	Corr. $N_2 - N_1$		Normals N_2			
	$\Delta\alpha$	$\Delta\delta$	R.A.	w.	Dec.	w.		$\Delta\alpha$	$\Delta\delta$	R.A.	w.	Dec.	w.
	s	″	s		″			s	″	s		″	
A	+ 0·004	—0·05	39·428	34·1	27·38	38·3	u	+ 0·006	—0·12	43·813	20·4	25·32	26·6
B	+ 10	— 13	37·340	34·0	20·51	38·0	v	+ 1	+ 6	56·182	22·6	27·07	29·6
a	— 3	— 7	25·192	23·9	20·82	30·4	w	+ 2	— 5	27·175	28·5	32·34	35·2
b	+ 8	+ 5	2·479	21·8	0·59	29·3	x	— 1	+ 1	22·376	27·0	59·85	35·1
c	+ 6	+ 11	6·215	21·8	5·84	28·5	y	— 7	+ 8	25·859	25·4	53·88	33·1
d	+ 1	+ 1	17·917	25·0	12·52	32·3	z	— 10	— 4	3·480	23·7	58·92	30·9
e	— 5	— 7	40·289	25·2	2·31	32·4	α	+ 14	— 7	18·101	16·9	55·75	22·3
f	— 4	— 7	50·486	19·8	48·96	29·4	β	— 6	+ 14	38·014	18·5	16·27	22·0
g	+ 2	— 6	37·607	22·0	23·30	29·3	γ	+ 3	— 1	57·302	22·1	52·23	29·5
h	— 4	0	20·723	19·1	5·42	23·3	δ	— 8	— 3	39·730	22·8	49·04	29·8
i	+ 5	+ 12	41·125	19·2	2·46	26·5	ε	+ 2	+ 2	17·663	21·1	48·68	26·9
k	+ 3	+ 6	53·379	22·0	43·42	28·9	ζ	+ 3	+ 1	4·769	19·2	14·29	24·7
l	— 6	+ 1	22·119	17·7	18·98	23·8	η	— 9	+ 2	21·723	20·7	27·98	26·6
m	+ 3	— 6	53·998	24·4	40·04	32·8	θ	0	+ 8	23·781	21·9	57·44	28·9
n	— 1	+ 14	26·878	21·2	7·34	28·5	ι	+ 1	— 4	44·836	18·5	4·21	24·4
o	— 3	— 10	53·501	18·0	21·06	24·6	ι′	+ 1	— 14	46·672	18·6	55·55	25·6
p	— 2	— 4	55·998	31·8	49·35	40·4	κ	— 9	— 12	3·684	17·1	59·13	23·0
q	+ 5	— 2	23·657	27·8	22·40	35·7	λ	— 6	+ 6	45·803	14·0	32·96	17·4
r	— 3	0	59·483	21·7	0·51	28·2	μ	+ 6	+ 1	8·919	28·5	12·60	37·8
s	— 5	+ 12	53·285	19·9	22·56	26·2	C	+ 5	— 1	31·516	31·7	28·42	35·1
t	— 4	+ 5	4·460	31·9	18·34	41·2	D	+ 7	+ 5	55·070	25·7	35·50	29·5

The separate results were again compared with these new normals, and the finally adopted magnitudes were employed in the reduction of those series where a term varying with magnitude had been found in the previous investigation. Making use of these final magnitudes throughout in grouping the differences from N_2, the following mean differences were found for the Right Ascensions. Weights from 1 to 6 were given to the separate differences in each series depending on the number of observations according to the classification before adopted.

Digitized by Google

Group	No. of stars	Magnitude		Mean Difference in R.A. from N_2 (in $0^s \cdot 001$), and weight						
		limits	mean	Berlin	Cincinnati	*Melbourne	Vienna	Pulkowa	*Cape	Paris. G. I. M.
I	9	5·3, 6·7	6·19	0 44	−11 36	+ 8 40	−24 28	+ 1 44	− 8 46	+ 2 39
II	9	7·0, 7·8	7·54	+ 8 33	+ 4 30	0 29	+20 20	+ 8 40	− 3 38	+12 36
III	14	7·9, 8·1	7·99	− 4 53	+12 41	+ 6 42	+22 29	+10 61	+ 9 62	−10 48
IV	10	8·2, 8·5	8·37	+ 3 41	− 2 32	− 3 32	− 7 23	−22 49	− 2 46	− 2 42

Group	Mean Difference in R.A. from N_2 (in $0^s \cdot 001$), and weight							
	Paris, C. J.	Cordoba	*Greenwich	Leipzig	*Leiden	*Mt. Hamilton	*Oxford	*Königsberg
I	−12 23	−44· 16	+ 8 37	−21 45	0 39	+ 8 16	−11 15	+37 37
II	+ 9 24	+ 3 28	−11 31	+10 35	0 25	− 3 23	+15 27	−23 19
III	−12 29	+ 7 42	+ 4 41	+ 4 50	0 35	− 2 41	+ 7 40	−19 29
IV	+12 30	+18 32	+ 2 33	+ 1 42	− 5 34	+ 1 35	− 4 30	−12 28

Group	Mean Difference in R.A. from N_2 (in $0^s \cdot 001$), and weight							
	*Dublin	*Cambridge (Eng.)	*Bordeaux	*Cambridge (Mass.)	*Washington	*Algiers	*Naples	Hamburg
I	+16 18	− 1 35	−40 17	+ 9 36	− 7 6	+ 3 35	+ 5 47	0 32
II	−13 11	+ 4 30	+36 18	−15 24	− 1 16	+ 8 19	− 2 37	+ 4 21
III	− 1 13	−11 38	+10 31	− 3 37	+ 3 22	− 3 29	0 55	+ 1 31
IV	−12 4	+12 30	−18 28	+ 4 32	+ 7 16	−15 34	+ 2 43	+ 2 28

The sign * placed before the name of the observatory denotes those series in which a variable magnitude correction was applied.

The number of stars given in the second column at the beginning of the table is the total number of stars belonging to the group, and the mean magnitude indicated in the third column is the simple mean of the magnitudes of all these stars. Observations were complete for all groups, however, only in the Berlin, Cape and Leipzig series. For the other series, therefore, the tabulated mean magnitude is slightly different, for one group or another, from the mean magnitude to which the tabulated mean differences of Right Ascension would exactly correspond, in case there is a progression with magnitude in the observed difference, or a residual progression in those series which already have received a provisional correction for magnitude equation.

The second and third means for Algiers should be, adding the overlooked stars, +9 (w. 21), and −7 (w. 33).

Putting the tabulated mean differences Δa (Obs. − N_2) = $-[a + b(M - 8{\cdot}0)]$, the constants in this expression were found from the four equations furnished for each series by the above means, as follows :—

Digitized by Google

Series of observations	a	b	Weight of b		Total reduction to the system N_2		
			from eq.	absol.			
	s	s			s	s	
Berlin	− 0·001	− 0·0001	125	140	− 0·001	− 0·0001	(M − 8·0)
Cincinnati	− 0·004	− 0·0073	101	9	− 0·078	− 0·0073	„
*Melbourne	− 0·001	+ 0·0036	108	46	− 0·023	− 0·0114	„
Vienna (fin. red.)	− 0·009	− 0·0144	76	9	− 0·073	− 0·0144	„
Pulkowa	+ 0·003	+ 0·0052	133	11	+ 0·047	+ 0·0052	„
*Cape	− 0·002	− 0·0047	135	59	− 0·068	− 0·0222	„
Paris, G. I. M.	+ 0·001	+ 0·0034	115	13	+ 0·044	+ 0·0034	„
„ C. d. J.	− 0·003	− 0·0076	71	15	0·000	− 0·0076	„
Cordoba	− 0·007	− 0·0232	60	10	− 0·114	− 0·0232	„
*Greenwich	0·000	+ 0·0027	102	19	− 0·051	− 0·0203	„
Leipzig	− 0·002	− 0·0111	127	43	− 0·048	− 0·0111	„
*Leiden	+ 0·001	+ 0·0010	112	136	− 0·051	− 0·0140	„
*Mt. Hamilton	+ 0·000	+ 0·0026	44	29	− 0·077	− 0·0174	„
*Oxford	− 0·004	− 0·0029	41	12	+ 0·008	− 0·0229	„
*Königsberg	+ 0·013	+ 0·0226	108	12	...	...	
*Dublin	+ 0·006	+ 0·0108	49	7	− 0·072	− 0·0392	„
*Cambridge (Eng.)	− 0·001	− 0·0016	96	14	− 0·079	− 0·0316	„
*Bordeaux	− 0·002	− 0·0123	55	5	− 0·025	− 0·0253	„
*Cambridge (Mass.)	+ 0·002	+ 0·0042	99	16	− 0·064	− 0·0238	„
*Washington	− 0·003	− 0·0080	16	6	− 0·095	− 0·0230	„
*Algiers	+ 0·006	+ 0·0064	98	14	− 0·007	− 0·0136	„
*Naples	0·000	+ 0·0015	131	85	+ 0·003	− 0·0085	„
Hamburg	− 0·001	− 0·0007	87	7	− 0·035	− 0·0007	„

For Königsberg, the total reduction would become from this computation $= -0^s{\cdot}201 - 0^s{\cdot}0974(M-8{\cdot}0)$ which however, as already mentioned, does not apply to the results of the final reduction of the observations given above, p. 517. For these, the reduction to N_2 becomes, according to pp. 519 and 542, $= -0^s{\cdot}285 - 0^s{\cdot}0914(M-8{\cdot}0)$, besides the term depending upon time, $-0^s{\cdot}03\ (t-19^h44^m)^h$. For Naples, the total correction given in the preceding table is to be replaced by the complete formula: Red. to $N_2 = -0^s{\cdot}019 - 0^s{\cdot}0064(M-8{\cdot}0) + 0^s{\cdot}022(t-18^h38^m{\cdot}6)^h$; and for Leiden the addition of the term $-0^s{\cdot}037(t-19^h40^m)^h$ is requisite.

The weights computed from the equations are given in the table for the co-efficient b, and with them the corresponding approximate absolute weights, computed on the basis of weight = unity for an average error of $0^s{\cdot}02$, or a mean error $\pm 0^s{\cdot}025$. These absolute weights are very small in many instances, and most of the adopted co-efficients of M in the formula are affected, therefore, with considerable uncertainty. No doubt however remains that in all of the series in which the transits were recorded with the chronograph, the Right Ascensions increase with diminishing brightness. It must be borne in mind that the Berlin Right Ascensions already contain a correction for this increase; no exception, therefore, to this rule is shown in the table.

Digitized by Google

In the "eye and ear" observations, the same tendency is shown, with the exception of Pulkowa and one of the Paris series; in neither of the two latter instances can the opposite sign of the magnitude correction be regarded as certain, on account of the small weight with which the co-efficient is determined.

The differences of the Declinations were first grouped in the same manner as those of the Right Ascensions and weighted correspondingly. The following means were found for the groups.

Group	No. of stars.	Mean mag.	Mean Difference of Declination from N_2 (in 0".01), and weight					
			Berlin	Cincinnati	Melbourne	Vienna	Pulkowa	Cape
I	9	6·19	+ 4 44	+ 3 36	+ 4 40	−17 28	+ 5 43	+ 7 46
II	9	7·54	+ 1 33	−12 29	−17 29	− 9 20	− 8 39	+ 6 37
III	14	7·99	− 2 53	+25 41	+ 7 42	+11 30	+ 4 60	− 8 62
IV	10	8·37	+ 1 41	−31 32	+ 4 32	− 4 21	− 2 48	+ 1 46
General mean			+ 0'.01	− 0'.02	0'.00	− 0'.04	0'.00	+ 0'.01
Total correction			− 0·01	+ 0·56	− 0·96	+ 0·49	+ 0·38	+ 0·35

Group	Mean Difference of Declination from N_2 (in 0".01), and weight					
	Paris, G. I. M.	Paris, C. J.	Cordoba	Greenwich	Leipzig	Leiden
I	−13 39	−14 24	−17 16	+ 7 38	−16 45	+ 8 38
II	+ 2 36	− 6 24	− 3 28	− 7 29	− 3 34	+ 9 25
III	+ 1 48	+11 29	− 4 41	+12 41	+ 2 50	− 4 35
IV	+ 9 42	+28 30	+18 31	−22 34	+10 42	− 4 34
G. m.	0'.00	+ 0'.06	0'.00	− 0'.01	− 0'.02	+ 0'.02
T. c.....	− 0·41	− 0·72	− 0·42	+ 1·01	− 0·18	+ 0·52

Group	Mean Difference of Declination from N_2 (in 0".01), and weight					
	Mt. Hamilton	Oxford	Königsberg	Dublin	Cambridge (Eng.)	Bordeaux
I	− 3 17	− 5 15	−41 36	−23 18	+32 35	+23 17
II	+ 7 24	+ 6 27	+19 18	−23 11	− 9 28	+ 4 18
III	− 1 41	0 39	−17 29	+21 13	− 1 38	− 2 31
IV	− 3 35	− 1 30	+39 28	+15 4	−22 31	−10 28
G. m.	0'.00	0'.00	− 0'.05	− 0'.08	+ 0'.01	+ 0'.01
T. c.....	+ 0·51	+ 0·37	+ 0·66	+ 0·20	+ 1·29	− 0·10

Digitized by Google

Group	Mean Difference of Declination from N_2 (in o″·01), and weight				
	Cambridge (Mass.)	Washington	Algiers	Naples	Hamburg
I	+ 9 36	+71 5	−13 35	0 47	+ 3 29
II	− 2 25	− 1 14	−10 19	+ 8 37	−15 21
III	− 5 36	−14 22	+10 28	0 54	+11 31
IV	+13 33	−14 15	+13 34	−10 44	−16 26
G. m.	+ 0′·04	− 0′·03	+ 0′·01	− 0′·01	− 0′·03
T. c.....	− 0·18	+ 0·10	− 0·85	+ 0·35	+ 0·87

Including the stars which had been inadvertently omitted, the first three means for Algiers should be: −11 (36), −9 (21), −1 (32); general mean, −0″·01; total correction, −0″·83.

A progression with magnitude is indicated by these means in some series, but not to such an extent as undoubtedly to exceed the limits of accidental error in any case.

Next, the stars were arranged in order of Declination, and six groups were formed in which the mean differences from the normals N_2 and their weights become those given in the following table:—

Group	No. of stars	Dec.	Mean δ	Berlin	Cincinnati	Melbourne	Vienna	Pulkowa	Cape
A	4	3°·2 to 4°·3	− 3°·8	+ 3 16	−16 14	− 6 15	+44 7	+23 17	+ 1 18
B	7	4·5 „ 4·7	4·6	−10 27	−35 22	−25 22	−27 14	− 6 31	+10 30
C	10	4·8 „ 5·0	4·9	+ 9 42	+33 32	− 4 33	+20 26	− 3 49	+ 2 46
D	10	5·2 „ 6·0	5·5	− 1 41	+ 4 34	+ 3 35	−19 22	− 4 47	+ 3 46
E	7	6·4 „ 7·3	6·8	− 1·28	−13 21	+12 22	− 8 17	+26 26	−13 32
F	4	8·0 „ 9·2	8·4	+ 4 17	−10 15	+22 16	−24 13	−24 20	− 3 19

Group	Paris, G. M.	Paris, C. J.	Cordoba	Greenwich	Leipzig	Leiden	Mt. Ham.	Oxford	Königsb.
A	− 5 14	+10 8	−20 8	− 1 14	− 9 15	−11 12	+22 8	+ 4 8	−30 11
B	+14 27	− 6 17	+28 21	0 22	− 3 26	0 21	+ 3 20	+21 21	+16 13
C	− 7 45	− 3 28	− 2 33	− 9 32	−11 40	+ 3 34	− 5 33	0 29	−14 26
D	+13 40	+23 29	− 6 28	− 1 36	+ 7 42	− 3 35	− 8 31	−13 27	+17 32
E	−17 23	+26 14	+14 15	0 22	− 1 29	+17 18	+ 3 16	− 9 17	−19 17
F	−12 16	−25 11	−37 11	+ 9 16	+ 4 19	+ 5 12	+ 8 9	+10 9	−23 12

Group	Dublin	Cambridge (Eng.)	Bordeaux	Cambridge (Mass.)	Washington	Algiers	Naples	Hamburg
A	+53 4	+ 9 14	−72 5	−37 12	− 8 2	−16 12	+ 4 16	−43 11
B	−20 6	−34 20	− 1 18	−19 19	+ 25 16	+ 1 13	+16 28	+25 14
C	+ 5 15	− 2 30	+20 24	− 4 31	+ 3 14	− 6 32	0 45	+23 27
D	−14 8	−25 33	− 5 26	+18 34	+ 1·12	+16 34	− 9 47	+ 7 26
E	−45 6	+11 20	+ 7 14	+23 21	−101 7	+16 19	− 8 27	−59 17
F	−18 7	+90 15	+ 9 7	+25 13	+ 15 5	−49 13	− 1 19	+ 2 12

Digitized by Google

The comparison includes the full Algiers series.—

To determine the mean errors of the results more accurately, the squares of the separate differences from the normals N_2 were taken, multiplied by the class weights from 1 to 6, and summed up for each series.

The following table gives for the Right Ascensions the values of Σpvv thus obtained, together with the steps by which the *mean error*, corresponding to weight *unity*, was computed for each series.

Series	Σpvv	No. stars	Const. det.	Average proportion	Uncorrected square of m.e. (1)	Factor	Mean error for weight 1	Average weight	Average mean error
							s		s
Berlin	0·010249	42	1	0·183	0·000250	1·224	± 0·017	4·1	± 0·009
Cincinnati	0·244287	41	1	0·011	6107	1·011	0·078	3·4	0·043
Melbourne	0·048714	41	2	0·056	1249	1·060	0·036	3·5	0·019
Vienna	0·131112	40	1	0·011	3362	1·011	0·058	2·5	[0·037]
Pulkowa	0·329107	41	1	0·015	8228	1·015	0·091	4·7	0·042
Cape	0·074455	42	2	0·076	1861	1·082	0·045	4·6	0·021
Paris, G. I. M.	0·208963	41	1	0·018	5224	1·018	0·073	4·0	0·036
,, C. du J.	0·134694	39	1	0·021	3550	1·021	0·060	2·7	0·037
Cordoba	0·145176	37	1	0·019	4033	1·020	0·064	3·2	[0·036]
Greenwich	0·139520	41	2	0·026	3577	1·027	0·061	3·4	0·033
Leipzig	0·077232	42	1	0·055	1884	1·059	0·045	4·0	[0·022]
Leiden	0·015328	41	3	0·152	403	1·176	0·022	3·2	0·012
Mt. Hamilton	0·036603	36	2	0·088	1076	1·090	0·034	3·2	0·019
Oxford	0·089566	38	2	0·033	2491	1·034	0·051	3·0	0·029
Königsberg	0·219195	41	2	0·012	5625	1·012	0·075	2·8	[0·045]
Dublin	0·086937	23	2	0·012	4140	1·013	0·065	2·0	0·046
Cambridge (Eng.)	0·163635	41	2	0·028	4196	1·028	0·066	3·2	0·037
Bordeaux	0·326086	38	2	0·009	9058	1·008	0·096	2·5	0·060
Cambridge (Mass.)	0·137795	41	2	0·019	3537	1·020	0·060	3·1	0·034
Washington	0·051958	31	2	0·030	1792	1·031	0·043	2·9	0·025
Algiers	0·150689	39	2	0·020	4073	1·020	0·064	3·1	0·037
Naples	0·022625	41	2	0·102	580	1·113	0·025	4·4	[0·012]
Hamburg	0·331497	41	1	0·009	8287	1·008	0·091	2·7	0·056

The average proportion to which each series has contributed to the means N_2 is given in the table, and the corresponding factor by which the quotient $\frac{\Sigma pvv}{n-m}$ must be multiplied in each series to obtain the correct value of the square of mean error corresponding to unity of weight. The numbers given in these two columns are not quite exact, those given as average proportions being strictly applicable to those stars only which occur in all series, but they are sufficient for the purpose.

Digitized by Google

Some injustice, however, may be done in this table to those series in which the reduction to the system N_1 had been assumed constant, and a noticeable variation with magnitude was afterwards found from comparison with the normals N_2, or in which the co-efficient of previously used magnitude variation was considerably changed in the second approximation.

The numbers given for Vienna and Königsberg apply to the results of the first reduction, and those for Naples to a comparison of the results uncorrected for change with time.

Introducing, therefore, the second term in those six series for which a constant reduction was formerly used, and the second term presently was found with a comparatively large co-efficient, the numbers of the preceding table are changed as follows :—

Series	Σpvv	No. stars	No. of constants determ.	Uncorrected square of mean error	Mean error, weight 1	Average mean error
					s	s
Cincinnati	0·242935	41	2	0·006229	± 0·079	
Vienna	0·114350	40	2	3010	0·055	± 0·035
Pulkowa	0·325369	41	2	8343	0·092	
Paris, C. du J.	0·130723	39	2	3533	0·060	
Cordoba	0·092730	37	2	2649	0·052	0·029
Leipzig	0·058082	42	2	1452	0·040	0·020

Nothing appears to be actually gained by the introduction of the second term for three of the series, while for Vienna the mean error is somewhat, and for Cordoba and Leipzig considerably diminished. Replacing the old Vienna reduction by that finally made, the numbers just given are replaced by the following :

0·113767	40	3	0·003075	± 0·056

For Königsberg and Naples the comparison with the normals N_2 has not been repeated with the results of the final reductions ; it could not give results sensibly different from the following found from the comparison with the normals N_3 (pp. 519, 542) :—

Königsberg	0·147130	41 — 3	0·003870	± 0·063	average mean error	± 0·037
Naples	0·014308	41 — 3	376·	0·0204	„ „	0·010

In these two cases the reductions to the system of N_3 were made with the finally adopted magnitudes. The other differences which here were squared were not corrected for the differences between these magnitudes and those originally used in the

Digitized by Google

comparison with the normals N_2. With some few exceptions however these differences are small and cannot have exercised an appreciable influence upon the determination of the mean errors.

From the differences of the results for Declination, reduced to the system N_1 by constant corrections, from the normals N_2, the following table is constructed :—

Series	Σprv	No. stars	Average proportion	Uncorrected square of m.e. (1)	Factor	Mean error for weight 1	Average	
							weight	mean error
						″		″
Berlin	5·2871	42	0·143	0·1290	1·165	± 0·39	4·1	± 0·19
Cincinnati	29·4571	41	0·018	0·7364	1·018	0·87	3·4	0·47
Melbourne	18·3840	41	0·034	0·4596	1·035	0·69	3·5	0·37
Vienna	34·8978	40	0·014	0·8948	1·014	0·95	2·5	0·60
Pulkowa	20·2563	41	0·033	0·5064	1·034	0·72	4·7	0·33
Cape	4·8250	42	0·124	0·1177	1·141	0·37	4·6	0·17
Paris, G. I. M.	11·0255	41	0·055	0·2756	1·058	0·54	4·0	0·27
,, C. du J.	14·5852	40	0·024	0·3740	1·024	0·62	2·7	0·38
Cordoba	16·7393	37	0·028	0·4650	1·029	0·69	3·2	0·39
Greenwich	23·0800	41	0·025	0·5795	1·027	0·77	3·4	0·42
Leipzig	10·2958	42	0·058	0·2511	1·061	0·52	4·0	0·26
Leiden	6·3170	41	0·101	0·1579	1·113	0·42	3·2	0·23
Mt. Hamilton	4·2263	36	0·115	0·1208	1·127	0·37	3·2	0·21
Oxford	11·5426	38	0·035	0·3120	1·036	0·57	3·0	0·33
Königsberg	62·7110	40	0·008	1·5678	1·008	1·26	2·8	0·75
Dublin	11·8930	23	0·013	0·5406	1·014	0·74	2·0	0·53
Cambridge (Eng.)	29·8454	41	0·019	0·7463	1·020	0·87	3·2	0·49
Bordeaux	30·7373	38	0·016	0·8307	1·015	0·92	2·5	0·58
Cambridge (Mass.)	33·6509	41	0·015	0·8413	1·015	0·92	3·1	0·52
Washington	31·8618	30	0·009	1·0987	1·008	1·05	2·9	0·62
Algiers	16·2597	38	0·044	0·4395	1·047	0·68	3·1	0·39
Naples	8·5804	41	0·067	0·2145	1·073	0·46	4·4	0·23
Hamburg	70·6908	41	0·006	1·7673	1·006	1·33	2·7	0·81

If the Königsberg Declinations are assumed to vary with the magnitude and corrected by the formula given above, Σprv for them becomes, from the comparison with N_3, 45·1391, whence: uncorrected square of mean error for weight 1 = 1·1879; mean error for weight 1 = 1″·10, average mean error ± 0″·66. The diminution of mean error is so considerable that it seems to justify the correction, which, therefore, has been ultimately adopted.

Digitized by Google

Third Approximation to Normals.

The results derived for the separate series were reduced, those for Right Ascension by the formulæ, given in the table, p. 570, with addition of the term depending upon time for Leiden, and those for Declination by applying the mean differences tabulated p. 571, to the Berlin system, differing from the system N_2 by the quantities $+0^s{\cdot}001 + 0^s{\cdot}0001(M-8)$ and $+0''{\cdot}01$. Weights were given to the reduced results, computed with such values of the accidental mean error of an observation and of the constant mean error of an observatory's result as first were found from a combination of the comparisons made for the three series to determine these different parts of the total mean error. The means taken with regard to these weights, gave the corrections to the normals N_2 $\Delta\alpha'$ and $\Delta\delta$ given in the following table. To these a further correction $\Delta\alpha'' = +0^s{\cdot}0015(M-4)$ was added as the most probable value of the correction of the Berlin system of Right Ascensions, the derivation of which will be given in a following chapter. In this manner the new normals ($N_3 = N_2 + \Delta\alpha' + \Delta\alpha''$ and $N_2 + \Delta\delta$) were derived, which were communicated to Dr. Gill as final results in October 1891, and used by him in the reduction of the Triangulation of the *Victoria* stars.

Star	Correction to N_2			Normals N_3		Star	Correction to N_2			Normals N_3		
	$\Delta\alpha'$	$\Delta\alpha''$	$\Delta\delta$	R.A. 1889·0	Dec. 1889·0		$\Delta\alpha'$	$\Delta\alpha''$	$\Delta\delta$	R.A. 1889·0	Dec. 1889·0	
			″	h m s	° ′ ″				″	h m s	° ′ ″	
A	+1·4	+2·7	−0·01	19 6 39·432	−8 7 27·39	u	−1·3	+6·0	+0·03	19 43 43·818	−4 48 25·29	
B	−1·7	+2·0	−0·03	14 37·340	5 37 20·54	v	−0·6	+4·0	+0·02	44 56·185	4 58 27·05	
a	−3·2	+5·7	−0·02	21 25·194	5 57 20·84	w	−2·7	+6·3	0·00	47 27·179	4 51 32·34	
b	+3·8	+6·3	−0·01	23 2·489	6 24 0·60	x	−1·7	+6·1	−0·03	48 22·386	5 19 59·88	*22ˢ·372 sent to Dr. Gill.
c	−0·3	+6·8	−0·01	24 6·221	5 9 5·85	y	+4·9	+6·1	+0·01	51 25·870	4 58 53·87	
d	+2·8	+6·6	0·00	25 17·926	5 54 12·52	z	+0·4	+6·7	0·00	52 3·487	5 28 58·92	
e	−0·4	+6·4	−0·01	25 40·295	5 21 2·32	α	+1·0	+6·0	+0·03	52 18·108	6 38 55·72	
f	+5·7	+5·3	−0·01	27 50·497	4 58 48·97	β	+2·1	+6·0	+0·02	52 38·022	4 39 16·25	
g	0·0	+6·7	−0·01	28 37·614	4 41 23·31	γ	+7·7	+5·1	+0·03	54 57·315	4 36 52·20	†57ˢ·302 sent to Dr. Gill.
h	−2·5	+5·7	+0·02	29 20·726	4 33 5·40	δ	+2·8	+6·4	+0·02	55 39·739	6 40 49·02	
i	+4·5	+5·5	+0·02	30 41·135	5 1 2·44	ε	−4·4	+3·9	+0·02	56 17·662	5 17 48·66	
k	−6·7	+5·8	0·00	30 53·378	4 32 43·42	ζ	+2·6	+6·0	0·00	57 4·778	8 0 14·29	
l	−2·9	+6·0	+0·07	31 22·122	3 43 18·91	η	+2·7	+6·2	+0·02	57 21·732	4 56 27·96	
m	−1·9	+2·4	0·00	31 53·668	4 53 40·03	θ	+2·0	+6·6	+0·04	59 23·790	6 53 57·40	
n	+3·0	+3·9	+0·02	34 26·885	5 42 7·32	ι	+9·7	+4·5	+0·18	20 0 44·850	4 44 4·03	
o	−0·8	+5·4	−0·02	34 53·536	4 17 21·68	ι′	+2·1	+5·9	+0·01	0 46·680	7 19 55·54	
p	+3·2	+5·4	−0·01	35 56·007	4 32 46·36	κ	+1·2	+5·2	0·00	1 3·650	8 29 56·13	
q	−1·6	+6·6	+0·04	39 23·662	4 47 22·56	λ	−5·8	+6·1	−0·09	2 45·803	7 20 33·053	‡32ˢ·97 sent to Dr. Gill.
r	−0·2	+5·8	−0·02	40 59·489	3 56 0·53	μ	+1·2	+3·7	+0·02	5 8·924	9 10 12·58	
s	−3·5	+5·8	−0·02	41 53·287	5 30 22·58	C	−1·1	+3·6	−0·05	14 31·518	6 42 28·47	
t	−2·2	+5·9	+0·05	43 4·464	4 46 18·29	D	+4·4	+3·1	−0·01	19 55·077	3 9 35·51	

Digitized by Google

The unit of $\Delta\alpha'$ and $\Delta\alpha''$ is $0^s{\cdot}001$. The normals refer to the mean epoch of observation, which, for all of the stars, is included between the limits 1889·5 and 1889·6.

Derivation of Final Normals.

At a later time only, when, in connection with the preparation of the MS. for press, a final revision of the computations was made, it was noticed that a term depending upon time should be taken into account in the reduction of the Königsberg and of the Naples Right Ascensions, and a term depending on magnitude in the reduction of the Königsberg Declinations. The introduction of the time term (and the correction of an accidental error) nearly doubled — tripled for the stars most frequently observed — the weight given to the Naples Right Ascensions in the computation of the normals N_3. Further, an entirely new reduction was afterwards made of the Vienna Right Ascensions of the *Victoria* stars and of the Königsberg series, the results of which, given above, appeared preferable to those used for the normals N_2 and N_3. Finally, several accidental errors were detected in the reductions, which had exercised some influence upon the general determination of weights, and upon some of the special results combined in the normals N_3 of the preceding table, which thus were erroneously communicated to Dr. Gill, as mentioned in the table.

A complete re-discussion of the mean errors and of corresponding weights was therefore undertaken, which furnished the results given in the subsequent chapter dealing with this matter; further, adopting these definitive weights, and using the definitive results of the separate series, and the definitive and complete reductions to the Berlin system, as derived in the preceding investigation, a new set of normals was formed, of which the following table gives all the necessary particulars.

The "observed" values given in this table are those derived above as results of the separate series, viz., the means of the observations reduced to homogeneity within the system of the series concerned. The "reduced" values are the preceding values reduced to the system of the Berlin *Victoria* series. Weight unity corresponds to an estimated mean error = $\sqrt{0{\cdot}01}$ (sec. of time) in Right Ascension, and in Declination to an estimated mean error = $\sqrt{0{\cdot}1}$ (sec. of arc). Under the heading "difference" the outstanding errors are given, viz., the deviations of the separate reduced results from their means taken with regard to the assumed weights. No account of proper motion has been taken in forming these deviations, because their influence on the comparison would only in very exceptional cases reach one unit of the last decimal place.

Digitized by Google

General Table of Results of Observations of the Victoria Stars, and Comparison with Final Normals.

Observatory	Epoch	No. obs.	Right Ascension		W.	Diff.	Declination		W.	Diff.
			obs.	red.			obs.	red.		
m			h m				° ′			
A 5·8			19 6				— 8 7			
			s	s		s	″	″		″
Berlin	89·57	26	39·437	·437	16·4	+ 0·008	27·36	27·36	5·2	— 0·01
Cincinnati	·57	12	·469	·407	1·6	— 22	27·69	·13	1·5	+ 0·22
Melbourne	·58	25, 27	·416	·419	5·2	— 10	26·45	·41	2·6	— 0·06
Vienna	·58	6	·461	·419	1·1	— 10	28·14	·64	0·7	— 0·29
Pulkowa	·61	47, 48	·392	·428	0·7	— 1	28·01	·64	1·3	— 0·29
Cape	·55	56	·441	·423	7·2	— 6	27·60	·24	5·8	+ 0·11
Paris, G. M.	·55	27, 28	·407	·444	2·1	+ 15	27·12	·52	1·3	— 0·17
„ C. J.	·55	16	·385	·402	1·4	— 27	27·25	·96	0·7	— 0·61
Greenwich	{·65 ·64}	32	·427	·421	2·3	— 8	28·38	·36	1·9	— 0·01
Leipzig	·54	31, 32	·456	·433	4·5	+ 4	27·40	·57	2·2	— 0·22
Leiden	·52	15	·424	·426	11·0	— 3	27·67	·14	3·7	+ 0·21
Königsberg	·60	23	·487	·421	1·5	— 8	28·03	26·96	1·0	+ 0·39
Dublin	·59	4	·411	·426	1·0	— 3	28·02	27·81	0·7	— 0·46
Cambridge (Eng.)	·59	20	·455	·446	1·6	+ 17	27·72	26·42	0·7	+ 0·93
Bordeaux	·55	1	·330	·361	0·2	— 68	27·90	27·99	0·2	— 0·64
Cambridge (Mass.)	·51	11	·432	·421	2·4	— 8	26·44	26·61	0·6	+ 0·74
Algiers	·54	14	·408	·432	1·2	+ 3	26·99	27·84	1·6	— 0·49
Naples	·57	61, 60	·428	·434	19·2	+ 5	27·80	·42	2·4	— 0·07
Hamburg	·57	15, 12	·462	·429	1·1	0	28·26	·38	0·8	— 0·03
m			h m				° ′			
B 5·3			19 14				— 5 37			
			s	s		s	″	″		″
Berlin	89·57	26	37·345	·345	16·4	+ 0·009	20·26	20·26	5·2	+ 0·21
Cincinnati	·57	12	·380	·322	1·6	— 15	20·93	·37	1·5	+ 0·10
Melbourne	·58	24, 25	·314	·322	5·1	— 15	19·73	·69	2·6	— 0·22
Vienna	·57	7	·347	·312	1·2	— 25	21·56	21·06	0·8	— 0·59
Pulkowa	·69	12, 13	·315	·349	0·5	+ 12	21·08	20·71	0·9	— 0·24
Cape	·55	56	·353	·346	7·2	+ 9	20·70	·34	5·8	+ 0·13
Paris, G. M.	·56	26	·294	·330	2·1	— 7	20·46	·86	1·2	— 0·39
„ C. J.	·55	14	·308	·329	1·3	— 8	20·31	21·02	0·7	— 0·55
Greenwich	·65	35, 36	·316	·320	2·3	— 17	21·63	20·61	1·9	— 0·14
Leipzig	·52	31	·339	·322	4·5	— 15	20·39	·56	2·2	— 0·09
Leiden	·52	15	·337	·341	11·0	+ 4	20·84	·31	3·7	+ 0·16
Königsberg	·60	23	·403	·377	1·5	+ 40	21·41	·19	1·0	+ 0·28
Dublin	·56	5	·331	·366	1·1	+ 29	21·04	·83	0·8	— 0·36
Cambridge (Eng.)	·59	20	·338	·345	1·6	+ 8	22·12	·82	0·7	— 0·35
Bordeaux	·55	1	·210	·254	0·2	— 83	18·20	18·29	0·2	+ 2·18
Cambridge (Mass.)	·51	11	·340	·341	2·4	+ 4	19·85	20·02	0·6	+ 0·45
Algiers	·54	13	·316	·346	1·2	+ 9	19·76	·61	1·5	— 0·14
Naples	·58	61, 59	·322	·334	19·2	— 3	20·91	·53	2·4	— 0·06
Hamburg	{·58 ·60}	20, 18	·330	·297	1·3	— 40	21·34	·46	0·9	+ 0·01

Digitized by Google

Observatory	Epoch	No. obs.	Right Ascension obs.	Right Ascension red.	W.	Diff.	Declination obs.	Declination red.	W.	Diff.
m a 7·8			h m 19 21				° ′ — 5 57			
Berlin	89·53	5	s 25·205	s ·205	7·2	+ s 0·014	″ 20·82	″ 20·82	2·9	+ ′ 0·01
Cincinnati	·55	3	·278	·202	0·4	+ 11	21·48	·92	0·4	— 0·09
Melbourne	·51	3	·213	·193	1·2	+ 2	19·62	·56	0·7	+ 0·27
Vienna	·50	2	·292	·221	0·5	+ 30	21·91	21·41	0·2	— 0·58
Pulkowa	·54	8	·151	·198	0·4	+ 7	21·45	·08	0·7	— 0·25
Cape	·50	6	·227	·164	1·8	— 27	21·22	20·86	2·1	— 0·03
Paris, G. M.	·49	6	·123	·167	0·6	— 24	19·94	·34	0·7	+ 0·49
,, C. J.	·57	3	·173	·175	0·7	— 15	20·30	21·01	0·8	— 0·18
Cordoba	·55	3	·303	·195	1·0	+ 4	21·12	·53	0·6	— 0·70
Greenwich	·53	4	·207	·161	0·9	— 30	22·00	20·98	0·6	— 0·15
Leipzig	·43	4	·282	·237	1·1	+ 46	20·29	·46	0·7	+ 0·37
Leiden	·50	7	·220	·184	6·9	— 7	21·20	·67	2·5	+ 0·16
Mt. Hamilton	·46	4	·250	·177	2·5	— 14	21·40	·88	2·1	— 0·05
Oxford	·52	3	·193	·207	0·7	+ 16	21·20	·83	0·7	0·00
Königsberg	·62	4	·401	·146	0·8	— 45	21·19	·72	0·2	+ 0·11
Dublin	·48	2	·268	·205	0·3	+ 14	21·16	·95	0·3	— 0·12
Cambridge (Eng.)	·50	3	·297	·225	0·5	+ 34	22·32	21·02	0·4	— 0·19
Bordeaux	·56	2	·145	·126	0·2	— 65	20·90	20·99	0·3	— 0·16
Cambridge (Mass.)	·46	3	·227	·169	0·6	— 22	20·40	·57	0·3	+ 0·26
Washington	·61	4	·257	·168	1·8	— 23	21·42	21·32	0·4	— 0·49
Algiers	·51	6	·213	·210	0·9	+ 19	19·93	20·78	0·9	+ 0·05
Naples	·55	7	·197	·196	7·9	+ 5	21·22	·84	1·7	— 0·01
Hamburg	·58	4	·268	·234	0·3	+ 43	21·22	·34	0·2	+ 0·49
m b 8·2			h m 19 23				° ′ — 6 24			
Berlin	89·55	6	s 2·495	s ·495	8·1	+ s 0·012	′ ″ 0·66	″ 0·66	3·2	— ′ 0·07
Cincinnati	·56	3	·553	·474	0·4	— 9	1·58	1·02	0·4	— 0·43
Melbourne	{·55 ·54}	3, 4	·490	·465	1·2	— 18	23 59·32	0·28	0·9	+ 0·30
Vienna	·55	3	·566	·489	0·7	+ 6	24 0·02	59·52	0·3	+ 1·07
Pulkowa	·56	8	·399	·448	0·4	— 35	0·79	0·42	0·7	+ 0·17
Cape	·48	6	·540	·469	1·8	— 14	0·77	·41	2·1	+ 0·18
Paris, G. M.	·54	9	·486	·532	0·8	+ 49	0·48	·88	0·9	— 0·29
,, C. J.	·51	5	·567	·566	0·9	+ 83	23 59·63	·34	1·0	+ 0·25
Cordoba	·62	3	·613	·495	1·0	+ 12	59·54	59·95	0·6	+ 0·64
Greenwich	·56	3, 5	·520	·465	0·7	— 18	24 1·87	0·85	0·7	— 0·26
Leipzig	·43	4	·510	·461	1·1	— 22	0·53	·70	0·7	— 0·11
Leiden	·50	3	·526	·484	3·5	+ 1	1·21	·68	1·4	— 0·09
Mt. Hamilton	·47	4	·536	·456	2·5	— 27	1·23	·71	2·1	— 0·12
Oxford	·52	3	·458	·462	0·7	— 21	1·31	·94	0·7	— 0·35
Königsberg	·53	3	·773	·481	0·7	— 2	1·13	·78	0·2	— 0·19
Dublin	·59	1	·703	·624	0·2	+ 141	0·47	·26	0·2	+ 0·33

Digitized by Google

Observatory	Epoch	No. obs.	Right Ascension obs.	Right Ascension red.	Weight	Diff.	Declination obs.	Declination red.	Weight	Diff.
			h m				° ′			
b—*cont.*			19 23				— 6 24			
			s	s		s	′ ″	″		″
Cambridge (Eng.) ...	89·52	2, 3	2·541	·457	0·3	— 0·026	2·28	0·98	0·4	— 0·39
Bordeaux	·58	1	·540	·511	0·1	+ 28	23 59·80	59·89	0·1	+ 0·70
Cambridge (Mass.)...	·48	3	·550	·482	0·4	— 1	24 1·10	1·27	0·2	— 0·68
Washington.....	·65	2	·515	·416	1·0	— 67	0·75	0·65	0·2	— 0·06
Algiers	·54	6, 7	·513	·504	0·9	+ 21	23 59·30	·15	1·0	+ 0·44
Naples	·54	7	·487	·484	7·9	+ 1	24 1·11	·73	1·7	— 0·14
Hamburg	·55	3	·562	·527	0·2	+ 44	2·02	1·14	0·1	— 0·55
			h m				° ′			
c 8·5			19 24				— 5 9			
			s	s		s	″	″		″
Berlin	89·56	6	6·212	·212	8·1	— 0·003	6·19	6·19	3·2	— 0·33
Cincinnati	·58	4	·299	·218	0·5	+ 3	5·84	5·28	0·5	+ 0·58
Melbourne	·58	3	·284	·256	1·2	+ 41	4·47	·43	0·7	+ 0·43
Vienna	{·65 ·57}	2, 1	·216	·135	0·5	— 80	6·62	6·12	0·1	— 0·26
Pulkowa	·59	10	·183	·234	0·5	+ 19	6·17	5·80	0·8	+ 0·06
Cape	·50	8	·299	·221	2·3	+ 6	6·05	·69	2·5	+ 0·17
Paris, G. M.....	·51	9	·156	·203	0·8	— 12	5·11	·51	0·9	+ 0·35
„ C. J.	·58	3	·200	·197	0·7	— 18	4·43	·14	0·8	+ 0·72
Cordoba	·67	3	·370	·245	1·0	+ 30	5·45	·86	0·6	0·00
Greenwich	·60	4	·327	·266	0·9	+ 51	6·65	·63	0·6	+ 0·23
Leipzig	·44	6	·240	·187	1·5	— 27	5·41	·58	1·0	+ 0·28
Leiden	·51	3	·264	·217	3·5	+ 2	6·80	6·27	1·4	— 0·41
Mt. Hamilton	·47	4	·292	·207	2·5	— 8	6·52	·00	2·1	— 0·14
Oxford	·57	3	·219	·217	0·7	+ 2	6·04	5·67	0·7	+ 0·19
Königsberg	·50	3	·577	·258	0·7	+ 43	5·71	·45	0·2	+ 0·41
Cambridge (Eng.) ...	·53	3	·297	·203	0·5	— 12	7·95	6·65	0·4	— 0·79
Bordeaux.....	·61	3	·233	·196	0·3	— 19	5·80	5·89	0·4	— 0·03
Cambridge (Mass.)...	·46	2, 3	·330	·255	0·3	+ 40	5·40	·57	0·3	+ 0·29
Washington.....	·58	2	·285	·180	1·0	— 35	5·60	·50	0·2	+ 0·36
Algiers	·43	2	·230	·217	0·5	+ 2	4·90	·75	0·3	+ 0·11
Naples	·53	6	·216	·212	7·1	— 3	6·48	6·10	1·6	— 0·24
Hamburg	·58	2	·240	·205	0·1	— 10	7·50	·62	0·1	— 0·76
			h m				° ′			
d 8·4			19 25				— 5 54			
			s	s		s	″	″		″
Berlin	89·54	7	17·928	·928	9·0	+ 0·000	12·27	12·27	3·4	+ 0·24
Cincinnati	·58	5	·907	·827	0·6	— 92	13·87	13·31	0·6	— 0·80
Melbourne	·53	5	·979	·952	1·8	+ 33	11·32	12·28	1·1	+ 0·23
Vienna	{·64 ·53}	2, 1	18·018	·938	0·5	+ 19	13·61	13·11	0·1	— 0·60
Pulkowa	·65	12	17·887	·937	0·5	+ 18	13·37	·00	0·9	— 0·49

Digitized by Google

Observatory	Epoch	No. obs.	Right Ascension		W.	Diff.	Declination		W.	Diff.
			obs.	red.			obs.	red.		
			h m				° ′			
d—*cont.*			19 25				− 5 54			
			s	s		s		″	″	″
Cape	89·56	11	17·996	·920	2·9	+ 0·001	12·89	12·53	3·1	− 0·02
Paris, G. M.	·52	5	·838	·884	0·5	− 35	12·07	·47	0·6	+ 0·04
„ C. J.	·59	4	·925	·923	0·8	+ 4	11·55	·26	0·9	+ 0·25
Cordoba	·69	3	18·060	·938	1·0	+ 19	11·36	11·77	0·6	+ 0·74
Greenwich	·66	5	17·942	·883	1·0	− 36	14·02	13·00	0·7	− 0·49
Leipzig	·46	10	·964	·913	2·1	− 6	12·24	12·41	1·3	+ 0·10
Leiden	·49	4	·953	·906	4·5	− 13	13·44	·91	1·4	− 0·40
Mt. Hamilton	·49	5, 6	·989	·906	2·8	− 13	13·01	·49	2·6	+ 0·02
Oxford	·65	3	·898	·898	0·7	− 21	13·11	·74	0·7	− 0·23
Königsberg	·60	5	18·214	·903	0·9	− 16	12·43	·14	0·3	+ 0·37
Cambridge (Eng.)	·61	4	17·996	·905	0·6	− 14	13·76	·46	0·5	+ 0·05
Bordeaux	·60	3	·897	·863	0·3	− 56	13·07	13·16	0·4	− 0·65
Cambridge (Mass.)	·46	5	·994	·922	0·6	+ 3	11·80	11·97	0·4	+ 0·54
Washington	·52	1	18·050	·947	0·5	+ 28	11·60	·50	0·1	+ 1·01
Algiers	·56	5, 6	17·936	·925	0·8	+ 6	11·63	12·48	0·9	+ 0·03
Naples	·55	12	·931	·927	10·9	+ 8	12·91	·53	2·0	− 0·02
Hamburg	{·58 ·68}	3, 1	·928	·893	0·2	− 26	12·00	11·12	0·0	+ 1·39
			h m				° ′			
e 8·8			19 25				− 5 21			
			s	s		s		″	″	″
Berlin	89·58	7	40·292	·292	9·0	+ 0·004	2·45	2·45	3·4	− 0·14
Cincinnati	·59	5	·419	·339	0·6	+ 51	3·41	·85	0·6	− 0·54
Melbourne	·61	6	·265	·239	2·1	− 49	1·44	·40	1·2	− 0·09
Vienna	·46	1	·359	·281	0·3	− 7	1·66	1·16	0·1	+ 1·15
Pulkowa	{·58 ·61}	14, 13	·199	·248	0·6	− 40	2·32	·95	0·9	+ 0·36
Cape	·53	11, 10	·340	·266	2·9	− 22	2·80	2·44	2·9	− 0·13
Paris, G. M.	·51	5	·276	·322	0·5	+ 34	1·52	1·92	0·6	+ 0·39
„ C. J.	·56	2	·312	·311	0·5	+ 23	1·60	2·31	0·6	0·00
Cordoba	·73	4	·350	·230	1·2	− 58	1·90	·31	0·7	0·00
Greenwich	·71	6, 5	·313	·256	1·1	− 32	3·46	·44	0·7	− 0·13
Leipzig	·46	10	·357	·307	2·1	+ 19	1·74	1·91	1·3	+ 0·40
Leiden	·55	5	·333	·288	5·3	0	2·77	2·24	2·0	+ 0·07
Mt. Hamilton	·48	6	·381	·299	3·1	+ 11	2·65	·13	2·6	+ 0·18
Oxford	·67	3	·297	·299	0·7	+ 11	2·64	·27	0·7	+ 0·04
Königsberg	·66	5	·617	·315	0·9	+ 27	2·06	1·74	0·3	+ 0·57
Cambridge (Eng.)	·58	5	·397	·309	0·7	+ 22	3·92	2·62	0·5	− 0·31
Bordeaux	·61	3	·280	·248	0·3	− 40	2·97	3·06	0·4	− 0·75
Cambridge (Mass.)	·56	5	·360	·290	0·6	+ 2	2·58	2·75	0·4	− 0·44
Algiers	·46	3	·300	·290	0·6	+ 2	1·33	·18	0·5	+ 0·13
Naples	·55	12	·298	·295	10·9	+ 7	2·71	·33	2·0	− 0·02
Hamburg	·58	3	·293	·258	0·2	− 30	3·23	·35	0·1	− 0·04

Digitized by Google

Observatory	Epoch	No. obs.	Right Ascension		W.	Diff.	Declination		W.	Diff.
			obs.	red.			obs.	red.		
m			h m				° ′			
f 7·5			19 27				— 4 58			
			s	s		s	″	″		″
Berlin	89·56	7	50·499	·499	9·0	+ 0·009	48·84	48·84	3·4	+ 0·09
Cincinnati	·57	5	·580	·506	0·6	+ 16	49·06	·50	0·6	+ 0·43
Melbourne	·60	6, 7	·518	·502	2·1	+ 12	47·97	·93	1·4	0·00
Vienna	·51	2	·575	·508	0·5	+ 18	50·53	50·03	0·2	— 1·10
Pulkowa	·59	16, 14	·401	·446	0·6	— 44	49·43	49·06	0·9	— 0·13
Cape	·52	11	·539	·483	2·9	— 7	49·15	48·79	3·1	+ 0·14
Paris, G. M.	·53	12	·497	·540	1·0	+ 50	48·83	49·23	1·0	— 0·30
„ C. J.	·51	6	·467	·472	1·0	— 18	48·12	48·83	1·0	+ 0·10
Cordoba	·68	4	·587	·485	1·2	— 4	48·62	49·03	0·7	— 0·10
Greenwich	·60	5	·494	·454	1·0	— 36	50·39	·37	0·7	— 0·44
Leipzig	·47	12	·534	·492	2·3	+ 2	49·08	·25	1·3	— 0·32
Leiden	·54	5	·537	·502	5·3	+ 12	49·18	48·65	2·0	+ 0·28
Oxford	·53	3	·448	·468	0·7	— 22	48·85	·48	0·7	+ 0·45
Königsberg	·56	4	·664	·433	0·8	— 57	50·29	49·73	0·2	— 0·80
Dublin	·51	3	·517	·466	0·5	— 24	49·43	·22	0·4	— 0·29
Cambridge (Eng.)	·56	5	·549	·487	0·7	— 3	50·39	·09	0·5	— 0·16
Bordeaux	·64	4	·508	·497	0·4	+ 7	48·70	48·79	0·5	+ 0·14
Cambridge (Mass.)	·45	5	·504	·453	0·9	— 37	48·78	·95	0·4	— 0·02
Washington	·54	1, —	·510	·427	0·5	— 63	...	...	...	...
Algiers	·53	5	·548	·549	0·8	+ 59	48·56	49·41	0·7	— 0·48
Naples	·57	11	·482	·485	10·4	— 5	49·37	48·99	1·9	— 0·06
Hamburg	·54	4	·520	·486	0·3	— 4	49·27	39	0·2	+ 0·54
m			h m				° ′			
g 8·5			19 28				— 4 41			
			s	s		s	″	″		″
Berlin	89·60	5	37·594	·594	7·2	— 0·014	23·32	23·32	2·9	— 0·01
Cincinnati	·56	3	·677	·596	0·4	— 12	24·98	24·42	0·4	— 1·11
Melbourne	·51	3	·622	·594	1·2	— 14	22·44	23·40	0·7	— 0·09
Vienna	·55	2	·635	·554	0·5	— 54	24·50	24·00	0·2	— 0·69
Pulkowa	·66 / ·68	10	·609	·660	0·5	+ 52	23·67	23·30	0·8	+ 0·01
Cape	·53	10	·672	·594	2·7	— 14	23·53	·17	2·9	+ 0·14
Paris, G. M.	·57	7	·639	·686	0·7	+ 78	22·53	22·93	0·8	+ 0·38
„ C. J.	·51	3	·655	·652	0·7	+ 44	22·33	23·04	0·8	+ 0·27
Cordoba	·71	3	·710	·585	1·0	— 23	22·98	·39	0·6	— 0·08
Greenwich	·51	4	·707	·646	0·9	+ 38	25·37	24·35	0·6	— 1·04
Leipzig	·48	5	·668	·615	1·3	+ 7	22·93	23·10	0·9	+ 0·21
Leiden	·49	5	·656	·606	5·3	— 2	23·93	·40	2·0	— 0·09
Mt. Hamilton	·46	4	·691	·606	2·5	— 2	23·69	·17	2·1	+ 0·14
Oxford	·63	3	·607	·605	0·7	— 3	22·95	22·58	0·7	+ 0·73
Königsberg	·63	2	·963	·641	0·5	+ 33	23·50	23·24	0·1	+ 0·07
Cambridge (Eng.)	·57	3	·764	·670	0·5	+ 62	25·26	·96	0·4	— 0·65
Bordeaux	·60	3	·500	·463	0·3	— 145	23·73	·82	0·4	— 0·51

Digitized by Google

Observatory	Epoch	No. obs.	Right Ascension obs.	Right Ascension red.	W.	Diff.	Declination obs.	Declination red.	W.	Diff.
			h m				° ′			
g—*cont.*			19 28				− 4 41			
Cambridge (Mass.)...	89·51	3	s 37·630	s ·555	0·4	—0·053	″ 22·90	″ 23·07	0·3	+ 0·24
Washington.....	·65	1	·680	·575	0·5	— 33	23·20	·10	0·1	+ 0·21
Algiers.....	·51	4	·535	·522	0·7	— 86	22·68	·53	0·6	— 0·22
Naples	·57	4	·643	·640	5·3	+ 32	23·68	·30	1·4	+ 0·01
Hamburg.....	·58	2	·650	·615	0·1	+ 7	22·90	22·02	0·1	+ 1·29
			h m				° ′			
m h 7·8			19 29				− 4 33			
Berlin	89·55	4	s 20·721	s ·721	6·1	—0·001	″ 5·70	″ 5·70	2·5	— 0·27
Cincinnati	·59	3	·750	·674	0·4	— 48	6·34	·78	0·4	— 0·35
Melbourne	·56	4	·741	·721	1·5	— 1	4·71	·67	0·9	— 0·24
Vienna.....	·60	2	·780	·709	0·5	— 13	5·31	4·81	0·2	+ 0·62
Pulkowa	·56	6	·737	·784	0·4	+ 62	5·82	5·45	0·6	— 0·02
Cape.....	·53	7	·769	·706	2·1	— 16	5·79	·43	2·3	0·00
Paris, G. M.....	·57	4	·695	·739	0·4	+ 17	4·80	·20	0·6	+ 0·23
„ C. J.	·58	1	·710	·712	0·3	— 9	5·00	·71	0·4	— 0·28
Cordoba	·74	2	·840	·732	0·8	+ 10	5·40	·81	0·5	— 0·38
Greenwich	·56	3	·777	·731	0·7	+ 9	6·72	·70	0·5	— 0·27
Leipzig.....	·44	4	·782	·737	1·1	+ 15	5·61	·78	0·7	— 0·35
Leiden	·54	3	·773	·733	3·5	+ 11	5·54	·01	1·4	+ 0·42
Mt. Hamilton	·47	4, 2	·818	·745	2·5	+ 23	5·66	·14	1·3	+ 0·29
Oxford.....	·51	3	·745	·759	0·7	+ 37	5·79	·42	0·7	+ 0·01
Königsberg	·50	1	21·050	·791	0·3	+ 69	4·26	3·79	0·1	+ 1·64
Cambridge (Eng.) ...	·58	3	20·723	·651	0·5	— 71	6·81	5·51	0·4	— 0·08
Bordeaux.....	·59	2	·825	·806	0·2	+ 84	5·40	·49	0·3	— 0·06
Cambridge (Mass.)...	·44	2	·810	·752	0·4	+ 30	5·65	·82	0·2	— 0·39
Washington.....	·66	1	·820	·731	0·5	+ 9	6·10	6·00	0·1	— 0·57
Algiers.....	·47	1	·770	·767	0·3	+ 45	4·75	5·60	0·2	— 0·17
Naples	·54	4	·693	·695	5·3	— 27	5·35	4·97	1·4	+ 0·46
Hamburg.....	·48	1	·700	·666	0·1	— 56	7·50	6·62	0·0	— 1·19
			h m				° ′			
m i 7·7			19 30				− 5 1			
Berlin	89·60	6	s 41·140	s ·140	8·1	+0·012	″ 2·48	″ 2·48	3·2	— 0·04
Cincinnati	·58	3	·213	·138	0·4	+ 10	2·52	1·96	0·4	+ 0·48
Melbourne	·65	3	·124	·105	1·2	— 23	1·60	2·56	0·7	— 0·12
Vienna.....	·58	2	·243	·173	0·5	+ 45	2·15	1·65	0·2	+ 0·79
Pulkowa	{·62 ·63}	11, 10	·097	·143	0·5	+ 15	2·62	2·25	0·8	+ 0·19
Cape.....	·53	9	·177	·117	2·5	— 11	2·83	·47	2·7	— 0·03
Paris, G. M.....	·52	6	·050	·094	0·6	— 34	1·98	·38	0·7	+ 0·06
„ C. J.	·58	2	·115	·118	0·5	— 10	1·60	·31	0·6	+ 0·13
Cordoba	·68	3	·250	·144	1·0	+ 16	1·97	·38	0·6	+ 0·06

Digitized by Google

Observatory	Epoch	No. obs.	Right Ascension obs.	Right Ascension red.	W.	Diff.	Declination obs.	Declination red.	W.	Diff.
			h m				° ′			
i—*cont.*			19 30				— 5 1			
Greenwich	89·65	3	s 41·127	s ·083	0·7	—s 0·045	″ 4·01	″ 2·99	0·5	— ″ 0·55
Leipzig	·44	6	·165	·121	1·5	— 7	2·67	·84	1·0	— 0·40
Leiden	·52	2	·168	·128	2·5	0	3·34	·81	1·0	— 0·37
Mt. Hamilton	·49	3	·166	·109	2·2	— 19	2·80	·28	1·7	+ 0·16
Oxford	·69	3	·143	·159	0·7	+ 31	3·21	·84	0·7	— 0·40
Königsberg	·70	2	·355	·105	0·5	— 23	3·67	3·14	0·1	— 0·70
Dublin	·64	1	·166	·107	0·2	— 21	2·45	·24	0·2	+ 0·20
Cambridge (Eng.)	·52	3	·217	·149	0·5	+ 21	3·41	·11	0·4	+ 0·33
Cambridge (Mass.)	·44	2, 3	·120	·064	0·4	— 64	2·20	·37	0·3	+ 0·07
Washington	·54	1, —	·210	·123	0·5	— 5	...	...	...	...
Algiers	·43	2	·120	·118	0·5	— 10	1·70	·55	0·3	— 0·11
Naples	{·59 ·60}	11	·126	·129	10·4	+ 1	2·53	·15	1·9	+ 0·29
Hamburg	·58	2	·255	·221	0·1	+ 93	3·00	·12	0·1	+ 0·32
	m		h m				° ′			
k 7·9			19 30				— 4 32			
Berlin	89·59	5	s 53·366	s ·366	7·2	—s 0·008	″ 43·64	″ 43·64	2·9	— ″ 0·21
Cincinnati	·59	3	·523	·446	0·4	+ 72	43·62	·06	0·4	+ 0·37
Melbourne	·52	3, 4	·397	·376	1·2	+ 2	42·09	·05	0·9	+ 0·38
Vienna	·48	1	·455	·382	0·3	+ 8	45·09	44·59	0·1	— 1·16
Pulkowa	·54	10	·328	·375	0·5	+ 1	43·63	43·26	0·8	+ 0·17
Cape	·56	10	·428	·363	2·7	— 11	43·85	·49	2·9	— 0·06
Paris, G. M.	·57	4	·310	·355	0·4	— 19	42·50	42·90	0·6	+ 0·53
„ C. J.	·54	3	·370	·372	0·7	— 2	43·00	43·71	0·8	— 0·28
Cordoba	·70	3	·450	·339	1·0	— 35	42·38	42·79	0·6	+ 0·64
Greenwich	·65	3	·383	·335	0·7	— 39	44·16	43·14	0·5	+ 0·29
Leipzig	·51	8	·435	·389	1·8	+ 15	43·27	·44	1·1	— 0·01
Leiden	·54	3	·427	·384	3·5	+ 10	43·86	·33	1·4	+ 0·10
Mt. Hamilton	·46	4	·422	·347	2·5	— 27	44·00	·48	2·1	— 0·05
Oxford	·57	3	·346	·357	0·7	— 17	43·63	·26	0·7	+ 0·17
Königsberg	·64	3	·575	·307	0·7	— 67	44·22	·78	0·2	— 0·35
Cambridge (Eng.)	·59	3	·455	·380	0·5	+ 6	44·95	·65	0·4	— 0·22
Bordeaux	·62	3	·390	·369	0·3	— 5	43·80	·89	0·4	— 0·46
Cambridge (Mass.)	·47	3	·450	·389	0·6	+ 15	43·90	44·07	0·3	— 0·64
Washington	·61	4	·469	·377	1·8	+ 3	43·78	43·68	0·4	— 0·25
Algiers	·51	1	·379	·374	0·3	0	43·57	44·42	0·2	— 0·99
Naples	·56	8	·389	·391	8·6	+ 17	43·67	43·29	1·8	+ 0·14
Hamburg	·62	3	·505	·471	0·2	+ 97	43·95	·07	0·1	+ 0·36

Digitized by Google

Observatory	Epoch	No. obs.	Right Ascension obs.	Right Ascension red.	W.	Diff.	Declination obs.	Declination red.	W.	Diff.
m 1 8·0			h m 19 31				° ′ — 3 43			
Berlin	89·52	4	s 22·095	s ·095	6·1	— s 0·019	″ 18·73	″ 18·73	2·5	+ ″ 0·21
Cincinnati	·60	3	·278	·200	0·4	+ 86	19·77	19·21	0·4	— 0·27
Melbourne	·63	3, 4	·110	·087	1·2	— 27	18·82	·78	0·9	— 0·84
Pulkowa	·56	6	·017	·065	0·4	— 49	19·08	18·71	0·6	+ 0·23
Cape	·58	6	·195	·128	1·8	+ 14	19·29	·93	2·1	+ 0·01
Paris, G. M.	·59	5	·116	·161	0·5	+ 47	18·68	19·08	0·6	— 0·14
„ C. J.	·62	1	·030	·031	0·3	— 83	18·00	18·71	0·4	+ 0·23
Cordoba	·73	3, 2	·220	·107	1·0	— 7	18·67	19·08	0·5	— 0·14
Greenwich	·70	3	·190	·139	0·7	+ 25	19·90	18·88	0·5	+ 0·06
Leipzig	·49	4	·155	·108	1·1	— 6	19·28	19·45	0·7	— 0·51
Leiden	·48	2	·176	·131	2·5	+ 17	19·65	·12	1·0	— 0·18
Mt. Hamilton	·50	3	·244	·167	2·2	+ 53	19·20	18·68	1·7	+ 0·26
Oxford	·66	3	·183	·192	0·7	+ 78	19·52	19·15	0·7	— 0·21
Königsberg	·62	2	·403	·125	0·5	+ 11	19·42	·01	0·1	— 0·07
Cambridge (Eng.)	·54	2	·121	·043	0·3	— 71	20·10	18·80	0·3	+ 0·14
Bordeaux	·57	1	·260	·236	0·1	+ 122	19·10	19·19	0·1	— 0·25
Cambridge (Mass.)	·53	2	·200	·137	0·3	+ 23	19·15	·32	0·2	— 0·38
Washington	·65	1	·200	·106	0·5	— 8	19·30	·20	0·1	— 0·26
Algiers	·50	3	·037	·031	0·6	— 83	18·07	18·92	0·5	+ 0·02
Naples	·59	4	·102	·103	5·3	— 11	18·83	·45	1·4	+ 0·49
Hamburg	·57	2	·160	·125	0·1	+ 11	21·20	20·32	0·1	— 1·38
m m 5·7			h m 19 31				° ′ — 4 53			
Berlin	89·57	7	s 53·998	s ·998	9·0	+ s 0·002	″ 40·03	″ 40·03	3·4	+ ″ 0·02
Cincinnati	·57	4	54·060	·999	0·5	+ 3	41·39	·83	0·5	— 0·78
Melbourne	·57	4	53·983	·986	1·5	— 10	38·92	39·88	0·9	+ 0·17
Vienna	·50	2	·995	·954	0·5	— 42	41·02	40·52	0·2	— 0·47
Pulkowa	·62	13	·967	·003	0·6	+ 7	40·07	39·70	0·9	+ 0·35
Cape	·57	11	54·014	·998	2·9	+ 2	40·23	·87	3·1	+ 0·18
Paris, G. M.	·51	5	53·910	·947	0·5	— 49	39·70	40·10	0·6	— 0·05
„ C. J.	·61	1	54·030	·048	0·3	+ 52	40·00	·71	0·4	— 0·66
Cordoba	·66	4	·097	·037	1·2	+ 41	39·54	39·95	0·7	+ 0·10
Greenwich	·68	4	53·992	·988	0·9	— 8	40·65	·63	0·6	+ 0·42
Leipzig	·46	8	54·023	·001	1·8	+ 5	39·94	40·11	1·1	— 0·06
Leiden	·49	5	·007	·994	5·3	— 2	40·42	39·89	2·0	+ 0·16
Mt. Hamilton	·48	7	·029	·992	3·3	— 4	40·50	·98	2·8	+ 0·07
Oxford	·71	3	53·893	·954	0·7	— 42	40·88	40·51	0·7	— 0·46
Königsberg	·61	3	54·068	·998	0·7	+ 2	40·65	39·55	0·2	+ 0·50
Dublin	·63	1	53·981	·000	0·2	+ 4	40·03	·82	0·2	+ 0·23
Cambridge (Eng.)	·58	4	54·025	·019	0·6	+ 23	41·65	40·35	0·5	— 0·30

Digitized by Google

Observatory	Epoch	No. obs.	Right Ascension obs.	Right Ascension red.	W.	Diff.	Declination obs.	Declination red.	W.	Diff.
			h m				° ′			
m—*cont.*			19 31				− 4 53			
Bordeaux	89·62	4	s 53·832	s ·866	0·4	− s 0·130	″ 40·18	″ 40·27	0·5	− ″ 0·22
Cambridge (Mass.)	·44	4	54·047	·039	1·4	+ 43	40·60	·77	0·4	− 0·72
Algiers	·56	6, 7	53·962	·987	0·9	− 9	39·13	39·98	1·0	+ 0·07
Naples	·55	9	·981	·997	9·3	+ 1	40·70	40·32	1·8	− 0·27
Hamburg	·66	2	54·095	·062	0·1	+ 66	41·17	·29	0·1	− 0·24
			h m				° ′			
n m 6·6			19 34				− 5 42			
Berlin	89·52	5	s 26·868	s ·868	7·2	− s 0·014	″ 7·59	″ 7·59	2·9	− ″ 0·27
Cincinnati	·59	3	·923	·856	0·4	− 26	7·20	6·64	0·4	+ 0·68
Melbourne	·60	3	·923	·916	1·2	+ 34	6·45	7·41	0·7	− 0·09
Vienna	·64	4	·929	·876	0·9	− 6	8·22	·72	0·4	− 0·40
Pulkowa	·56	10	·799	·840	0·5	− 42	7·65	·28	0·8	+ 0·04
Cape	·55	9	·906	·880	2·5	− 2	7·56	·20	2·7	+ 0·12
Paris, G. M.	·49	5	·800	·840	0·5	− 42	6·91	·31	0·6	+ 0·01
„ C. J.	·60	3	·893	·904	0·7	+ 22	5·97	6·68	0·8	+ 0·64
Cordoba	·65	4	·967	·886	1·2	+ 4	7·07	7·48	0·7	− 0·16
Greenwich	·76	2, 3	·930	·908	0·5	+ 26	7·38	6·36	0·5	+ 0·96
Leipzig	·44	5	·932	·900	1·3	+ 18	7·60	7·77	0·9	− 0·45
Leiden	·54	3	·905	·878	3·5	− 4	7·95	·42	1·4	− 0·10
Mt. Hamilton	·49	4	·955	·903	2·5	+ 21	7·91	·39	2·1	− 0·07
Oxford	·62	3	·788	·829	0·7	− 53	7·62	·25	0·7	+ 0·07
Königsberg	·59	3	·975	·822	0·7	− 60	8·01	·18	0·2	+ 0·14
Cambridge (Eng.)	·54	3	·948	·914	0·5	+ 32	8·15	6·85	0·4	+ 0·47
Bordeaux	·61	3	·900	·911	0·3	+ 29	7·63	7·72	0·4	− 0·40
Cambridge (Mass.)	·43	3	·960	·930	1·1	+ 48	7·03	·20	0·3	+ 0·12
Algiers	{·58 ·57}	5, 6	·850	·863	0·8	− 19	6·57	·42	0·9	− 0·10
Naples	·59	6, 5	·877	·888	7·1	+ 6	7·68	·30	1·5	+ 0·02
Hamburg	·57	2	·930	·896	0·1	+ 14	7·25	6·37	0·1	+ 0·95
			h m				° ′			
o m 7·6			19 34				− 4 17			
Berlin	89·49	4	s 53·498	s ·498	6·1	− s 0·001	″ 21·29	″ 21·29	2·5	− ″ 0·22
Cincinnati	·60	3	·492	·417	0·4	− 82	21·87	·31	0·4	− 0·24
Melbourne	·55	3	·524	·506	1·2	+ 7	20·26	·22	0·7	− 0·15
Vienna	·58	2	·635	·567	0·5	+ 68	20·68	20·18	0·2	+ 0·89
Pulkowa	·56	6	·472	·518	0·4	+ 19	21·58	21·21	0·6	− 0·14
Cape	·53	6	·615	·557	1·8	+ 58	21·48	·12	2·1	− 0·05
Paris, G. M.	·58	4	·430	·474	0·4	− 25	20·51	20·91	0·6	+ 0·16

Digitized by Google

Observatory	Epoch	No. obs.	Right Ascension		W.	Diff.	Declination		W.	Diff.
			obs.	red.			obs.	red.		
			h m				° ′			
o—*cont.*			19 34				− 4 17			
			s	s		s	″	″		″
Paris, C. J.	89·57	3	53·487	·491	0·7	− 0·008	20·33	21·04	0·8	+ 0·03
Cordoba	·58	4	·607	·503	1·2	+ 4	21·30	·71	0·7	− 0·64
Greenwich	·72	3	·547	·505	0·7	+ 6	21·77	20·75	0·5	+ 0·32
Leipzig	·43	4	·525	·482	1·1	− 17	20·35	·52	0·7	+ 0·55
Leiden	·48	2	·530	·489	2·5	− 10	21·44	·91	1·0	+ 0·16
Mt. Hamilton	·49	3, 4	·560	·490	2·2	− 9	21·46	·94	2·1	+ 0·13
Oxford	·62	3	·479	·497	0·7	− 2	21·41	21·04	0·7	+ 0·03
Königsberg	·56	2	·715	·472	0·5	− 27	20·76	20·23	0·1	+ 0·84
Cambridge (Eng.)	·60	5	·539	·474	0·7	− 25	22·74	21·44	0·5	− 0·37
Bordeaux	·59	2	·545	·531	0·2	+ 32	21·15	·24	0·3	− 0·17
Cambridge (Mass.)	·48	2	·585	·532	0·4	+ 33	21·35	·52	0·2	− 0·45
Algiers	·47	1	·510	·509	0·3	+ 10	20·15	·00	0·2	+ 0·07
Naples	·58	4	·487	·492	5·3	− 7	21·24	20·86	1·4	+ 0·21
Hamburg	·59	2	·615	·581	0·1	+ 82	22·45	21·57	0·1	− 0·50
			h m				° ′			
m p 7·6			19 35				− 4 32			
			s	s		s	″	″		″
Berlin	89·58	13	56·003	·003	12·7	+ 0·003	49·33	49·33	4·3	+ 0·03
Cincinnati	·57	7	·055	·980	0·8	− 20	50·60	50·04	0·8	− 0·68
Melbourne	·54	8	·007	·989	2·6	− 11	48·39	49·35	1·5	+ 0·01
Vienna	·57	4	·059	·991	0·9	− 9	50·35	·85	0·4	− 0·49
Pulkowa	{·61 ·62}	26, 28	55·983	·029	0·7	+ 29	50·05	·68	1·2	− 0·32
Cape	·55	19	56·072	·014	4·1	+ 14	49·65	·29	4·0	+ 0·07
Paris, G. M.	·52	14, 13	55·991	·035	1·1	+ 35	49·02	·42	1·0	− 0·06
,, C. J.	·54	7	·993	·997	1·0	− 3	48·52	·23	1·1	+ 0·13
Cordoba	·56	7	56·129	·025	1·5	+ 25	48·72	·13	0·9	+ 0·23
Greenwich	·70	7	·033	·991	1·2	− 9	50·25	·23	0·9	+ 0·13
Leipzig	·49	14	·046	·003	2·6	+ 3	49·02	·19	1·4	+ 0·17
Leiden	·50	7	·041	·000	6·9	0	49·86	·33	2·5	+ 0·03
Mt. Hamilton	·46	8	·064	·994	3·5	− 6	49·89	·37	2·9	− 0·01
Oxford	·56	3, 4	·005	·023	0·7	+ 23	49·48	·11	0·9	+ 0·25
Königsberg	·59	8	·229	·985	1·1	− 15	49·67	·14	0·4	+ 0·22
Dublin	·53	3	·058	·003	0·5	+ 3	49·76	·55	0·4	− 0·19
Cambridge (Eng.)	·59	7	·071	·006	0·9	+ 6	50·96	·66	0·6	− 0·30
Bordeaux	·64	3	·100	·086	0·3	+ 86	49·13	·22	0·4	+ 0·14
Cambridge (Mass.)	·51	11	·033	·980	1·6	− 20	49·42	·59	0·6	− 0·23
Washington	·62	8	·091	·006	3·0	+ 6	49·55	·45	0·8	− 0·09
Algiers	·49	5	55·964	·963	0·8	− 37	48·22	·07	0·7	+ 0·29
Naples	·59	39	·989	·994	17·4	− 6	49·63	·25	2·3	+ 0·11
Hamburg	·53	4	56·021	·987	0·3	− 13	51·30	50·42	0·2	− 1·06

Digitized by Google

Observatory	Epoch	No. obs.	Right Ascension		W.	Diff.	Declination		W.	Diff.
			obs.	red.			obs.	red.		
q 8·4			h m 19 39				° ′ — 4 47			
Berlin	89·58	10	s 23·660	s ·660	11·0	+ s 0·004	″ 22·09	″ 22·09	4·0	+ ″ 0·27
Cincinnati	·55	4	·706	·626	0·5	— 30	22·86	·30	0·5	+ 0·04
Melbourne	·52	4	·670	·643	1·5	— 13	21·82	·78	0·9	— 0·42
Vienna	·55	3	·703	·623	0·7	— 33	22·66	·16	0·3	+ 0·20
Pulkowa	·56	12	·580	·630	0·5	— 26	22·91	·54	0·9	— 0·18
Cape	·51	12	·714	·638	3·1	— 18	22·80	·44	3·2	— 0·08
Paris, G. M.	·53	19	·613	·659	1·4	+ 3	22·10	·50	1·1	— 0·14
„ C. J.	·53	6	·633	·631	1·0	— 25	21·90	·61	1·0	— 0·25
Cordoba	·56	5	·800	·678	1·3	+ 22	21·86	·27	0·8	+ 0·09
Greenwich	·62	5, 4	·752	·693	1·0	+ 37	23·84	·82	0·6	— 0·46
Leipzig	·45	8	·694	·643	1·8	— 13	22·32	·49	1·1	— 0·13
Leiden	·51	8	·707	·651	7·5	— 5	23·01	·48	2·7	— 0·12
Mt. Hamilton	·46	6	·741	·658	3·1	+ 2	22·88	·36	2·6	0·00
Oxford	·52	3	·640	·640	0·7	— 16	22·58	·21	0·7	+ 0·15
Königsberg	·62	4	·976	·658	0·8	+ 2	22·30	·01	0·2	+ 0·35
Dublin	·60	2	·697	·610	0·3	— 46	22·75	·54	0·3	— 0·18
Cambridge (Eng.)	·53	4	·759	·668	0·6	+ 12	23·90	·60	0·5	— 0·24
Bordeaux	·60	4	·678	·644	0·4	— 12	21·45	21·54	0·5	+ 0·82
Cambridge (Mass.)	·44	4	·745	·673	0·5	+ 17	22·05	22·22	0·5	+ 0·14
Washington	·58	2	·820	·717	1·0	+ 61	23·15	23·05	0·2	— 0·69
Algiers	·54	7, 8	·680	·669	0·9	+ 13	21·34	22·19	1·1	+ 0·17
Naples	·55	7	·657	·659	7·9	+ 3	22·63	·25	1·7	+ 0·11
Hamburg	{·57 ·55}	6, 5	·695	·660	0·4	+ 4	23·06	·18	0·2	+ 0·18
r 7·9			h m 19 40				° ′ — 3 56			
Berlin	89·57	5	s 59·486	s ·486	7·2	+ s 0·002	′ ″ 0·71	″ 0·71	2·9	— ″ 0·18
Cincinnati	·57	3	·532	·455	0·4	— 29	1·13	·57	0·4	— 0·04
Melbourne	·55	3	·513	·492	1·2	+ 8	55 58·94	59·90	0·7	+ 0·63
Vienna	·71	1	·559	·486	0·3	+ 2	56 0·01	·51	0·1	+ 1·02
Pulkowa	·55	10	·462	·509	0·5	+ 25	0·59	0·22	0·8	+ 0·31
Cape	·59	7	·558	·493	2·1	+ 9	0·85	·49	2·3	+ 0·04
Paris, G. M.	·57	4	·365	·410	0·4	— 74	0·20	·60	0·6	— 0·07
„ C. J.	·58	3	·487	·489	0·7	+ 5	55 59·83	·54	0·8	— 0·01
Cordoba	·69	3	·578	·467	1·0	— 17	59·93	·34	0·6	+ 0·19
Greenwich	{·60 ·59}	3	·564	·516	0·7	+ 32	56 1·56	·54	0·5	— 0·01
Leipzig	·43	4	·530	·484	1·1	0	0·20	·37	0·7	+ 0·16
Leiden	·54	3	·539	·489	3·5	+ 5	1·28	·75	1·4	— 0·22
Mt. Hamilton	·48	4	·543	·468	2·5	— 16	0·74	·22	2·1	+ 0·31
Oxford	·62	4, 3	·471	·482	0·9	— 2	0·69	·32	0·7	+ 0·21
Königsberg	·54	2	·712	·438	0·5	— 46	2·05	1·61	0·1	— 1·08

Digitized by Google

Observatory	Epoch	No. obs.	Right Ascension		W.	Diff.	Declination		W.	Diff.
			obs.	red.			obs.	red.		
			h m				° ′			
r—*cont.*			19 40				— 3 56			
			s	s		s	′ ″	″		″
Dublin	89·64	1	59·426	·359	0·2	— 0·125	0·25	0·04	0·2	+ 0·49
Cambridge (Eng.)	·61	5	·484	·409	0·7	— 75	1·71	·41	0·5	+ 0·12
Bordeaux	·56	2	·525	·504	0·2	+ 20	1·95	2·04	0·3	— 1·51
Cambridge (Mass.)	·46	3	·557	·496	0·6	+ 12	0·70	0·87	0·3	— 0·34
Washington	·65	1	·570	·478	0·5	— 6	0·50	·40	0·1	+ 0·13
Algiers	·51	4	·445	·440	0·7	— 44	55 59·68	·53	0·6	0·00
Naples	·59	9	·489	·494	9·3	+ 11	56 1·18	·80	1·8	— 0·27
Hamburg	{·61 ·58}	4, 3	·546	·512	0·3	+ 28	1·50	·62	0·1	— 0·09
			h m				° ′			
m s 7·9			19 41				— 5 30			
			s	s		s	″	″		″
Berlin	89·55	4	53·281	·281	6·1	0·000	22·61	22·61	2·5	— 0·06
Cincinnati	·60	3	·383	·306	0·4	+ 25	22·75	·19	0·4	+ 0·36
Melbourne	·60	3	·296	·275	1·2	— 6	22·05	23·01	0·7	— 0·46
Vienna	·56	2	·294	·221	0·5	— 60	22·15	21·65	0·2	+ 0·90
Pulkowa	·61	6	·202	·249	0·4	— 32	22·78	22·41	0·6	+ 0·14
Cape	·60	6	·348	·283	1·8	+ 2	22·77	·41	2·1	+ 0·14
Paris, G. M.	·58	3	·293	·338	0·3	+ 57	21·73	·13	0·5	+ 0·42
„ C. J.	·60	3	·210	·212	0·7	— 69	21·03	21·74	0·8	+ 0·81
Cordoba	·57	3	·390	·279	1·0	— 2	21·94	22·35	0·6	+ 0·20
Greenwich	·57	3	·336	·288	0·7	+ 7	23·93	·91	0·5	— 0·36
Leipzig	·43	4	·360	·314	1·1	+ 33	22·31	·48	0·7	+ 0·07
Leiden	·52	3	·321	·271	3·5	— 10	23·39	·86	1·4	— 0·31
Mt. Hamilton	·49	4	·368	·293	2·5	+ 12	23·54	23·02	2·1	— 0·47
Oxford	·57	3	·300	·311	0·7	+ 30	23·36	22·99	0·7	— 0·44
Königsberg	·50	2	·575	·301	0·5	+ 20	22·72	·28	0·1	+ 0·27
Cambridge (Eng.)	·54	2	·445	·370	0·3	+ 89	24·84	23·54	0·3	— 0·99
Bordeaux	·59	2	·275	·254	0·2	— 27	21·65	21·74	0·3	+ 0·81
Cambridge (Mass.)	·48	3	·357	·296	0·6	+ 15	21·80	·97	0·3	+ 0·58
Washington	·66	1	·410	·318	0·5	+ 37	23·40	23·30	0·1	— 0·75
Algiers	·61	5	·332	·327	0·8	+ 46	21·12	21·97	0·7	+ 0·58
Naples	·59	5	·268	·275	6·2	— 6	22·87	22·49	1·5	+ 0·06
Hamburg	·57	3	·183	·149	0·2	— 132	22·60	21·72	0·1	+ 0·83
			h m				° ′			
m t 7·9			19 43				— 4 46			
			s	s		s	″	″		″
Berlin	89·58	13	4·455	·455	12·7	— 0·003	18·19	18·19	4·3	+ 0·12
Cincinnati	·57	7	·521	·444	0·8	— 14	18·69	·13	0·8	+ 0·18
Melbourne	{·55 ·54}	7, 9	·493	·472	2 3	+ 14	17·04	·00	1·6	+ 0·31
Vienna	·53	5	·536	·463	1·0	+ 5	18·59	·09	0·5	+ 0·22
Pulkowa	{·63 ·62}	27, 26	·428	·475	0·7	+ 17	18·81	·44	1·2	— 0·13
Cape	·55	19	·533	·468	4·1	+ 10	18·73	·37	4·0	— 0·06

Digitized by Google

Observatory	Epoch	No. obs.	Right Ascension		W.	Diff.	Declination		W.	Diff.
			obs.	red.			obs.	red.		
			h m				° ′			
t—*cont.*			19 43				− 4 46			
			s	s		s	″	″		″
Paris, G. M.	89·53	19, 20	4·435	·480	1·4	+ 0·022	17·53	17·93	1·2	+ 0·38
,, C. J.	·54	7	·430	·432	1·0	− 26	17·67	18·38	1·1	− 0·07
Cordoba	·65	7	·596	·485	1·5	+ 27	18·00	·41	0·9	− 0·10
Greenwich	{·62 ·63}	9, 8	·489	·441	1·4	− 17	19·27	·25	1·0	+ 0·06
Leipzig	·49	14	·522	·476	2·6	+ 18	18·17	·34	1·4	− 0·03
Leiden	·48	6	·497	·446	6·1	− 12	19·18	·65	2·3	− 0·34
Mt. Hamilton	·46	8	·534	·459	3·5	+ 1	18·87	·35	2·9	− 0·04
Oxford	·51	4	·472	·483	0·9	+ 25	18·39	·02	0·9	+ 0·29
Königsberg	·61	7	·716	·442	1·0	− 16	19·40	·96	0·4	− 0·65
Dublin	·56	4	·490	·423	0·6	− 35	18·91	·70	0·5	− 0·39
Cambridge (Eng.)	·59	8	·517	·442	0·9	− 16	19·46	·16	0·6	+ 0·15
Bordeaux	·64	6	·500	·479	0·5	+ 21	17·53	17·62	0·7	+ 0·69
Cambridge (Mass.)	·50	8	·506	·445	1·3	− 13	18·02	18·19	0·5	+ 0·12
Washington	·62	8	·579	·487	3·0	+ 29	18·69	·59	0·8	− 0·28
Algiers	·48	6, 7	·453	·448	0·9	− 10	17·70	·55	1·0	− 0·24
Naples	·59	32, 30	·450	·455	16·4	− 3	18·71	·33	2·3	− 0·02
Hamburg	·58	3	·427	·393	0·2	− 65	19·58	·70	0·1	− 0·39
			h m				° ′			
u 8·0			19 43				− 4 48			
			s	s		s	″	″		″
Berlin	89·54	5	43·804	·804	7·2	− 0·009	25·11	25·11	2·9	+ 0·17
Cincinnati	·59	4	·836	·758·	0·5	− 54	25·07	24·51	0·5	+ 0·77
Melbourne	·60	5	·843	·820·	1·8	+ 8	24·12	25·08	1·1	+ 0·20
Vienna	·57	2, 3	·892	·818	0·5	+ 5	24·34	23·84	0·3	+ 1·44
Pulkowa	·60	6	·715	·763	0·4	− 50	25·72	25·35	0·6	− 0·07
Cape	·53	6	·884	·817	1·8	+ 4	25·83	·47	2·1	− 0·19
Paris, G. M.	·62	5	·790	·835	0·5	+ 22	25·34	·74	0·6	− 0·46
,, C. J.	·58	2	·820	·821	0·5	+ 8	24·90	·61	0·6	− 0·33
Cordoba	·58	3	·878	·765	1·0	− 48	25·72	26·13	0·6	− 0·85
Greenwich	·58	3	·933	·882·	0·7	+ 70	26·30	25·28	0·5	0·00
Leipzig	·43	4	·845	·798	1·1	− 15	24·78	24·95	0·7	+ 0·33
Leiden	·53	2	·854	·802	2·5	− 11	25·55	25·02	1·0	+ 0·26
Mt. Hamilton	·47	5	·892	·815·	2·8	+ 3	25·94	·42	2·3	− 0·14
Oxford	·53	3	·797	·806	0·7	− 7	25·46	·09	0·7	+ 0·19
Königsberg	·68	2	44·180	·896	0·5	+ 83	25·88	·47	0·1	− 0·19
Cambridge (Eng.)	·57	2	43·986	·908	0·3	+ 95	25·57	24·27	0·3	+ 1·01
Bordeaux	·62	1	·990	·966	0·1	+ 153	27·40	27·49	0·1	− 2·21
Cambridge (Mass.)	·47	2	·830	·767	0·3	− 46	25·65	25·82	0·2	− 0·54
Washington	·58	2	·908	·814	1·0	+ 1	25·70	·60	0·2	− 0·32
Algiers	·57	3	·897	·891	0·6	+ 78	25·10	·95	0·5	− 0·67
Naples	·58	6	·804	·810	7·1	− 3	25·79	·41	1·6	− 0·13
Hamburg	·63	3	·888	·853·	0·2	+ 41	24·53	23·65	0·1	+ 1·63

Digitized by Google

Observatory	Epoch	No. obs.	Right Ascension obs.	Right Ascension red.	W.	Diff.	Declination obs.	Declination red.	W.	Diff.
m v 6·7			h m 19 44				° ′ — 4 58			
Berlin	89·57	8, 7	s 56·181	s ·181	9·7	+ s 0·001	″ 26·98	″ 26·98	3·4	+ ″ 0·05
Cincinnati	·60	3	·317	·249	0·4	+ 69	26·85	·29	0·4	+ 0·74
Melbourne	·61	3, 4	·187	·179	1·2	— 1	25·99	·95	0·9	+ 0·08
Vienna	·55	2	·259	·204	0·5	+ 24	26·87	·37	0·2	+ 0·66
Pulkowa	{·56 ·55}	11, 10	·113	·154	0·5	— 26	27·00	·63	0·8	+ 0·40
Cape	·52	8	·208	·170	2·3	— 10	27·38	27·02	2·5	+ 0·01
Paris, G. M.	·53	8	·140	·180	0·7	0	26·64	·04	0·8	— 0·01
,, C. J.	·58	3	·193	·204	0·7	+ 24	26·63	·34	0·8	— 0·31
Cordoba	·56	4	·187	·104	1·2	— 76	26·57	26·98	0·7	+ 0·05
Greenwich	·63	3	·207	·183	0·7	+ 3	28·23	27·21	0·5	— 0·18
Leipzig	·45	6	·232	·199	1·5	+ 19	27·04	·21	1·0	— 0·18
Leiden	·54	5	·212	·177	5·3	— 3	27·58	·05	2·0	— 0·02
Mt. Hamilton	·48	4	·244	·190	2·5	+ 10	27·88	·36	2·1	— 0·33
Oxford	·59	3	·168	·207	0·7	+ 27	27·84	·47	0·7	— 0·44
Königsberg	·63	2	·313	·146	0·5	— 34	28·48	·68	0·1	— 0·65
Cambridge (Eng.)	·63	2	·134	·097	0·3	— 83	28·42	·12	0·3	— 0·09
Bordeaux	·56	2	·260	·269	0·2	+ 89	26·35	26·44	0·3	+ 0·59
Cambridge (Mass.)	·47	4	·212	·180	1·4	0	26·78	·95	0·4	+ 0·08
Algiers	·57	2	·195	·206	0·5	+ 26	26·15	27·00	0·3	+ 0·03
Naples	·54	6	·171	·185	7·1	+ 5	27·26	26·88	1·6	+ 0·15
Hamburg	·57	3	·147	·113	0·2	— 67	26·33	25·45	0·1	+ 1·58
m w 8·2			h m 19 47				° ′ — 4 51			
Berlin	89·53	8	s 27·175	s ·175	9·7	+ s 0·001	″ 32·33	″ 32·33	3·6	— ″ 0·01
Cincinnati	·57	4	·292	·213	0·5	+ 39	33·05	·49	0·5	— 0·17
Melbourne	·52	4	·194	·169	1·5	— 5	31·50	·46	0·9	— 0·14
Vienna	·63	4	·264	·187	0·9	+ 13	33·20	·70	0·4	— 0·38
Pulkowa	·56	12	·067	·116	0·5	— 58	33·23	·86	0·9	— 0·54
Cape	·50	11	·235	·164	2·9	— 10	32·44	·08	3·1	+ 0·24
Paris, G. M.	·55	13	·178	·224	1·1	+ 50	32·10	·50	1·0	— 0·18
,, C. J.	·52	5	·158	·157	0·9	— 17	31·58	·29	1·0	+ 0·03
Cordoba	·72	4	·257	·139	1·2	— 35	31·37	31·78	0·7	+ 0·54
Greenwich	·65	4	·182	·127	0·9	— 47	34·02	33·00	0·6	— 0·68
Leipzig	·47	8	·240	·191	1·8	+ 17	32·00	32·17	1·1	+ 0·15
Leiden	·51	7	·212	·154	6·9	— 20	32·84	·31	2·5	+ 0·01
Mt. Hamilton	·49	6	·246	·166	3·1	— 8	33·04	·52	2·6	— 0·20
Oxford	·62	3	·175	·179	0·7	+ 5	32·29	31·92	0·7	+ 0·40
Königsberg	·60	4	·456	·152	0·8	— 22	33·69	33·34	0·2	— 1·02
Dublin	·64	1	·196	·117	0·2	— 57	31·65	31·44	0·2	+ 0·88
Cambridge (Eng.)	·56	4	·286	·202	0·6	+ 28	33·62	32·32	0·5	0·00

Digitized by Google

Observatory	Epoch	No. obs.	Right Ascension		W.	Diff.	Declination		W.	Diff.
			obs.	red.			obs.	red.		
			h m				° ′			
w—*cont.*			19 47				— 4 51			
			s	s		s		″	″	
Bordeaux	89·63	4	27·250	·221	0·4	+ 0·047	32·15	32·24	0·5	+ 0·08
Cambridge (Mass.)	·44	4	·312	·244	0·5	+ 70	32·30	·47	0·4	— 0·15
Washington	{·59 ·58}	5, 4	·289	·190	2·1	+ 16	31·25	31·15	0·4	+ 1·17
Algiers	{·49 ·50}	5, 6	·194	·185	0·8	+ 11	31·58	32·43	0·9	— 0·11
Naples	·57	13	·175	·182	11·4	+ 8	32·67	·29	2·0	+ 0·03
Hamburg	·57	4	·282	·247	0·3	+ 73	33·56	·68	0·2	— 0·36
			h m				° ′			
m x 8·1			19 48				— 5 20			
			s	s			′ ″	″	″	
Berlin	89·50	8	22·370	·370	9·7	— 0·005	0·05	0·05	3·6	— 0·18
Cincinnati	·57	4	·470	·392	0·5	+ 17	0·16	59·60	0·5	+ 0·27
Melbourne	·57	4	·419	·395	1·5	+ 20	19 58·82	59·78	0·9	+ 0·09
Vienna	·57	3	·410	·335	0·7	— 40	20 0·72	0·22	0·3	— 0·35
Pulkowa	·59	12	·304	·353	0·5	— 22	0·29	59·92	0·9	— 0·05
Cape	·54	11	·469	·400	2·9	+ 25	0·22	·86	3·1	+ 0·01
Paris, G. M.	·53	9	·279	·324	0·8	— 51	19 59·23	·63	0·9	+ 0·24
„ C. J.	·59	5	·354	·354	0·9	— 21	59·02	·73	1·0	+ 0·14
Cordoba	·64	3	·515	·400	1·0	+ 25	59·83	0·24	0·6	— 0·37
Greenwich	·62	4	·460	·407	0·9	+ 32	20 0·77	59·75	0·6	+ 0·12
Leipzig	·45	8	·408	·360	1·8	— 15	19 59·35	·52	1·1	+ 0·35
Leiden	·50	6	·437	·381	6·1	+ 6	20 0·34	·81	2·3	+ 0·06
Mt. Hamilton	·47	7, 8	·445	·367	3·3	— 8	0·54	0·02	2·9	— 0·15
Oxford	·60	3	·357	·364	0·7	— 11	0·80	·43	0·7	— 0·56
Königsberg	·56	4	·722	·427	0·8	+ 52	19 59·28	58·90	0·2	+ 0·97
Dublin	·57	2	·492	·417	0·3	+ 42	59·48	59·27	0·3	+ 0·60
Cambridge (Eng.)	·60	4	·430	·349	0·6	— 26	20 1·41	0·11	0·5	— 0·24
Bordeaux	·62	4	·408	·381	0·4	+ 6	19 59·70	59·79	0·5	+ 0·08
Cambridge (Mass.)	·53	4	·460	·395	0·5	+ 20	59·62	·79	0·4	+ 0·08
Washington	·65	2	·440	·344	1·0	— 31	20 0·55	0·45	0·2	— 0·58
Algiers	·56	8	·389	·382	1·0	+ 7	19 58·81	59·66	1·1	+ 0·21
Naples	·60	13, 11	·364	·371	11·4	— 4	20 0·15	·77	1·9	+ 0·10
Hamburg	·55	4	·442	·407	0·3	+ 32	1·02	0·14	0·2	— 0·27
			h m				° ′			
m y 8·1			19 51				— 4 58			
			s	s		s		″	″	
Berlin	89·57	7	25·855	·855	9·0	— 0·009	53·97	53·97	3·4	— 0·09
Cincinnati	·56	4	·926	·848	0·5	— 16	53·71	·15	0·5	+ 0·73
Melbourne	·54	4	·894	·870	1·5	+ 6	52·83	·79	0·9	+ 0·09
Vienna	·52	2	·887	·812	0·5	— 52	54·15	·65	0·2	+ 0·23
Pulkowa	·59	12	·847	·896	0·5	+ 32	54·46	54·09	0·9	— 0·21
Cape	·51	10	·946	·877	2·7	+ 13	54·51	·15	2·9	— 0·27

Digitized by Google

Observatory	Epoch	No. obs.	Right Ascension		W.	Diff.	Declination		W.	Diff.
			obs.	red.			obs.	red.		
			h m				° ′			
y—*cont.*			19 51				− 4 58			
			s	s		s	″	″		″
Paris, G. M.	89·54	11	25·820	·865	1·0	+ 0·001	53·57	53·97	0·9	− 0·09
„ C. J.	·57	4	·862	·862	0·8	− 2	53·08	·79	0·9	+ 0·09
Cordoba	·69	5	·970	·855	1·3	− 9	53·62	54·03	0·8	− 0·15
Greenwich	·56	4	·917	·864	0·9	0	53·90	52·88	0·6	+ 1·00
Leipzig	·45	8	·936	·888	1·8	+ 24	53·87	54·04	1·1	− 0·16
Leiden	·50	5	·914	·856	5·3	− 8	54·36	53·83	2·0	+ 0·05
Mt. Hamilton	·47	5	·936	·858	2·8	− 6	54·34	·82	2·3	+ 0·06
Oxford	·56	3	·879	·886	0·7	+ 22	54·59	54·22	0·7	− 0·34
Königsberg	·65	3	26·160	·863	0·7	− 1	52·42	52·04	0·2	+ 1·84
Dublin	·51	2	25·958	·883	0·3	+ 19	52·89	·68	0·3	+ 1·20
Cambridge (Eng.)	·60	4	·886	·805	0·6	− 59	55·54	54·24	0·5	− 0·36
Bordeaux	·62	4	·908	·881	0·4	+ 17	53·78	53·87	0·5	+ 0·01
Cambridge (Mass.)	·44	4	26·000	·935	0·5	+ 71	53·68	·85	0·4	+ 0·03
Washington	·65	1	·010	·914	0·5	+ 50	53·50	·40	0·1	+ 0·48
Algiers	·54	5, 4	25·884	·877	0·8	+ 13	52·45	·30	0·6	+ 0·58
Naples	·55	11	·858	·865	10·4	+ 1	54·46	54·08	1·9	− 0·20
Hamburg	·57	3	·860	·825	0·2	− 39	55·27	·39	0·1	− 0·51
			h m				° ′			
m z 8·5			19 52				− 5 28			
			s	s		s	″	″		″
Berlin	89·56	6	3·476	·476	8·1	− 0·004	58·80	58·80	3·2	+ 0·13
Cincinnati	·57	4	·621	·540	0·5	+ 60	59·59	59·03	0·5	− 0·10
Melbourne	·57	4	·511	·483	1·5	+ 3	58·03	58·99	0·9	− 0·06
Vienna	·66	4	·593	·512	0·9	+ 32	59·40	·90	0·4	+ 0·03
Pulkowa	{·66 ·65}	15, 14	·383	·434	0·6	− 46	59·66	59·29	0·9	− 0·36
Cape	·59	10	·579	·501	2·7	+ 21	59·46	·10	2·9	− 0·17
Paris, G. M.	·58	7	·379	·426	0·7	− 54	58·29	58·69	0·8	+ 0·24
„ C. J.	·59	2	·460	·457	0·5	− 23	57·65	·36	0·6	+ 0·57
Cordoba	·67	5	·664	·539	1·3	+ 59	58·59	59·00	0·8	− 0·07
Greenwich	·62	4	·527	·466	0·9	− 14	59·98	58·96	0·6	− 0·03
Leipzig	·47	9	·536	·483·	2·0	+ 4	58·63	·80	1·2	+ 0·13
Leiden	·51	3	·563	·499	3·5	+ 19	59·36	·83	1·4	+ 0·10
Mt. Hamilton	·48	5	·573	·488	2·8	+ 8	59·33	·81	2·3	+ 0·12
Oxford	·60	3	·475	·473	0·7	− 7	59·78	59·41	0·7	− 0·48
Königsberg	·70	3	·832	499	0·7	+ 19	59·23	58·97	0·2	− 0·04
Cambridge (Eng.)	·58	4	·600	·506	0·6	+ 26	60·33	59·03	0·5	− 0·10
Bordeaux	·62	4	·490	·453	0·4	− 27	58·80	58·89	0·5	+ 0·04
Cambridge (Mass.)	·53	4	·522	·447	0·5	− 33	58·95	59·12	0·4	− 0·19
Washington	·66	1	·540	·435	0·5	− 45	59·90	·80	0·1	− 0·87
Algiers	·50	3	·447	·434	0·6	− 46	57·60	58·45	0·5	+ 0·48
Naples	·57	12	·465	·471	10·9	− 9	59·45	59·07	2·0	− 0·14
Hamburg	{·61 ·59}	4, 3	·431	·396	0·3	− 84	59·78	58·90	0·1	+ 0·03

Digitized by Google

Observatory	Epoch	No. obs.	Right Ascension		W.	Diff.	Declination		W.	Diff.
			obs.	red			obs.	red.		
			h m				° ′			
m α 8·0			19 52				— 6 38			
			s	s			″	″		″
Berlin	89·54	5	18·106	·106	7·2	— 0·001	55·58	55·58	2·9	+ 0·16
Cincinnati	·61	3	·190	·112	0·4	+ 6	56·67	56·11	0·4	— 0·37
Melbourne	·59	3	·137	·114	1·2	+ 8	54·71	55·67	0·7	+ 0·07
Vienna	·70	3	·133	·059	0·7	— 48	56·18	·68	0·3	+ 0·06
Pulkowa	·63	6	·184	·232	0·4	+ 125	55·93	·56	0·6	+ 0·18
Cape	·57	6	·135	·068	1·8	— 39	56·30	·94	2·1	— 0·20
Paris, G. M.	·58	3	·027	·072	0·3	— 35	55·93	56·33	0·5	— 0·59
„ C. J.	·60	1	·080	·081	0·3	— 26	54·80	55·51	0·4	+ 0·23
Cordoba	·63	4	·267	·154	1·2	+ 47	55·66	56·07	0·7	— 0·33
Greenwich	·61	3	·100	·049	0·7	— 57	56·21	55·19	0·5	+ 0·55
Leipzig	·45	4	·127	·080	1·1	— 27	55·28	·45	0·7	+ 0·29
Leiden	·47	1	·175	·117	1·3	+ 10	56·29	·76	0·5	— 0·02
Mt. Hamilton	{·47 ·48}	2, 3	·161	·084	1·7	— 22	56·16	·64	1·7	+ 0·10
Oxford	·65	3	·107	·116	0·7	+ 9	56·04	·67	0·7	+ 0·07
Königsberg	·49	1	·326	·038	0·3	— 69	56·75	56·34	0·1	— 0·60
Cambridge (Eng.)	·60	4	·204	·126	0·6	+ 19	57·24	55·94	0·5	— 0·20
Bordeaux	·60	3	·063	·039	0·3	— 68	55·90	·99	0·4	— 0·25
Cambridge (Mass.)	·58	2	·190	·127	0·3	+ 20	54·55	54·72	0·2	+ 1·02
Washington	·66	1	·240	·146	0·5	+ 39	56·60	56·50	0·1	— 0·76
Algiers	·47	1	·120	·114	0·3	+ 7	55·65	·50	0·2	— 0·76
Naples	·61	5	·113	·122	6·2	+ 15	56·08	55·70	1·5	+ 0·04
Hamburg	·59	3	·138	·103	0·2	— 3	57·40	56·52	0·1	— 0·78
			h m				° ′			
m β 8·0			19 52				— 4 39			
			s	s			s	″		″
Berlin	89·59	5	38·010	·010	7·2	— 0·007	16·68	16·68	2·9	— 0·42
Cincinnati	·60	3	·138	·060	0·4	+ ·44	16·58	·02	0·4	+ 0·24
Melbourne	{·64 ·63}	4	·056	·033	1·5	+ 17	15·30	·26	0·9	0·00
Vienna	·62	2	·164	·090	0·5	+ 73	15·68	15·18	0·2	+ 1·08
Pulkowa	·62	6	·106	·154	0·4	+ 137	16·88	16·51	0·6	— 0·25
Cape	·52	6	·107	·040	1·8	+ 23	16·53	·17	2·1	+ 0·09
Paris, G. M.	·52	3	37·923	·968	0·3	— 49	15·73	·13	0·5	+ 0·13
„ C. J.	·61	1	38·010	·011	0·3	— 6	16·10	·81	0·4	— 0·55
Cordoba	·55	4	·107	·994	1·2	— 23	15·68	·09	0·7	+ 0·17
Greenwich	·60	3	·070	·019	0·7	+ 3	16·73	15·71	0·5	+ 0·55
Leipzig	·44	3	·077	·030	0·9	+ 13	15·86	16·03	0·6	+ 0·23
Leiden	·53	2	·071	·013	2·5	— 4	17·06	·53	1·0	— 0·27
Mt. Hamilton	·47	2, 1	·101	·025	1·7	+ 8	17·16	·64	0·7	— 0·38
Oxford	·63	3	37·971	·980	0·7	— 37	16·53	·16	0·7	+ 0·10
Königsberg	·48	1	38·370	·082	0·3	+ 65	18·45	18·04	0·1	— 1·78
Dublin	·64	1	·136	·065	0·2	+ 48	16·45	16·24	0·2	+ 0·02

Digitized by Google

Observatory	Epoch	No. obs.	Right Ascension obs.	Right Ascension red.	W.	Diff.	Declination obs.	Declination red.	W.	Diff.
			h m				° ′			
β—cont.			19 52				— 4 39			
Cambridge (Eng.) ...	89·56	2	s 38·114	s ·036	0·3	+ s 0·019	″ 18·52	″ 17·22	0·3	— ″ 0·96
Bordeaux	·60	2	·080	·056	0·2	+ 39	14·90	14·99	0·3	+ 1·27
Cambridge (Mass.) ...	·44	2	·030	·967	0·3	— 50	16·35	16·52	0·2	— 0·26
Washington	·60	3	·075	·981	1·4	— 36	15·13	15·03	0·3	+ 1·23
Algiers	·57	1	37·924	·918	0·3	— 99	14·87	72	0·2	+ 0·54
Naples	·57	6	38·006	·015	7·1	— 2	16·35	97	1·6	+ 0·29
Hamburg	·48	1	·020	·985·	0·1	— 31	15·60	14·72	0·0·	+ 1·54
			h m				° ′			
γ m 7·4			19 54				— 4 36			
Berlin	89·59	7	s 57·313	s ·313	9·0	+ s 0·004	″ 52·23	″ 52·23	3·4	″ 0·00
Cincinnati	·55	3	·412	·339	0·4	+ 30	53·12	·56	0·4	— 0·33
Melbourne	·53	3, 4	·320	·304	1·2	— 5	51·47	·43	0·9	— 0·20
Vienna	·52	2	·396	·330	0·5	+ 21	53·83	53·33	0·2	— 1·10
Pulkowa	·50	6	·280	·325	0·4	+ 16	52·75	52·38	0·6	— 0·15
Cape	·53	6	·329	·275	1·8	— 34	52·61	·25	2·1	— 0·02
Paris, G. M.	·53	11	·286	·329	1·0	+ 20	51·60	·00	0·9	+ 0·23
,, C. J.	·57	3	·367	·372	0·7	+ 63	51·70	·41	0·8	— 0·18
Cordoba	·68	3	·383	·284	1·0	— 25	51·49	51·90	0·6	+ 0·33
Greenwich	·60	4	·342	·304	0·9	— 5	52·80	·78	0·6	+ 0·45
Leipzig	·43	4	·390	·350	1·1	+ 41	51·82	·99	0·7	+ 0·24
Leiden	·53	3	·367	·316	3·5	+ 7	52·85	52·32	1·4	— 0·09
Mt. Hamilton	·47	4, 5	·348	·282	2·5	— 27	52·78	·26	2·3	— 0·03
Oxford	·62	3	·286	·309	0·7	0	52·74	·37	0·7	— 0·14
Königsberg	·56	2	·535	·300	0·5	— 9	51·45	50·86	0·1	+ 1·37
Dublin	·63	1	·291	·244	0·2	— 65	53·13	52·92	0·2	— 0·69
Cambridge (Eng.) ...	·57	3	·382	·323	0·5	+ 14	53·75	·45	0·4	— 0·22
Bordeaux	·57	3	·393	·384	0·3	+ 75	52·03	·12	0·4	+ 0·11
Cambridge (Mass.) ...	·44	2	·290	·241	0·8	— 68	52·20	·37	0·2	— 0·14
Washington	·60	3	·418	·338	1·4	+ 29	51·93	51·83	0·3	+ 0·49
Algiers	·47	4	·320	·322	0·7	+ 13	51·40	52·25	0·6	— 0·02
Naples	·60	6, 5	·289	·303	7·1	— 6	52·52	·14	1·6	+ 0·09
Hamburg	·56	2	·280	·246	0·1	— 63	52·07	51·19	0·1	+ 1·04
			h m				° ′			
δ m 8·3			19 55				— 6 40			
Berlin	89·58	6	s 39·740	s ·740	8·1	+ s 0·007	″ 49·07	″ 49·07	3·2	— ″ 0·03
Cincinnati	·57	4	·775	·695	0·5	— 38	49·64	·08	0·5	— 0·04
Melbourne	·55	3	·735	·709	1·2	— 24	47·99	48·95	0·7	+ 0·09
Vienna	·55	2	·814	·736	0·5	+ 3	50·13	49·63	0·2	— 0·59
Pulkowa	·58	10	·692	·741	0·5	+ 8	49·78	·41	0·8	— 0·37

Digitized by Google

Observatory	Epoch	No. obs.	Right Ascension obs.	Right Ascension red.	W.	Diff.	Declination obs.	Declination red.	W.	Diff.
			h m				° ′			
δ—cont.			19 55				— 6 40			
			s	s		s	″	″		″
Cape	89·53	8	39·799	·725	2·3	— 0·008	49·62	49·26	2·5	— 0·22
Paris, G. M.	·58	5	·652	·698	0·5	— 35	48·47	48·87	0·6	+ 0·17
„ C. J.	·59	3	·697	·696	0·7	— 37	48·17	·88	0·8	+ 0·16
Cordoba	·70	3	·837	·717	1·0	— 16	48·47	·88	0·6	+ 0·16
Greenwich	{·61 ·63}	3, 4	·813	·756	0·7	+ 23	50·06	49·04	0·6	0·00
Leipzig	·44	6	·767	·717	1·5	— 16	48·56	48·73	1·0	+ 0·31
Leiden	·50	4	·789	·725	4·5	— 8	49·06	·53	1·7	+ 0·51
Mt. Hamilton	·47	4	·854	·772	2·5	+ 39	49·94	49·42	2·1	— 0·38
Oxford	·65	3	·761	·763	0·7	+ 30	49·71	·34	0·7	— 0·30
Königsberg	·65	3	40·112	·795	0·7	+ 62	48·51	48·22	0·2	+ 0·82
Cambridge (Eng.)	·54	3	39·841	·753	0·5	+ 21	50·47	49·17	0·4	— 0·13
Bordeaux	·64	3	·757	·725	0·3	— 8	48·90	48·99	0·4	+ 0·05
Cambridge (Mass.)	·49	3	·793	·723	0·4	— 10	47·50	47·67	0·3	+ 1·37
Washington	·65	1	·900	·799	0·5	+ 66	50·70	50·60	0·1	— 1·56
Algiers	·59	5	·732	·722	0·8	— 11	47·92	48·75	0·7	+ 0·29
Naples	·61	9	·713	·721	9·3	— 12	49·41	49·03	1·8	+ 0·01
Hamburg	·57	4	·805	·770	0·3	+ 37	50·27	49·39	0·2	— 0·35
			h m				° ′			
ε 6·6			19 56				— 5 17			
			s			s	″	″		″
Berlin	89·52	5	17·663	·663	7·2	+ 0·005	48·55	48·55	2·9	+ 0·09
Cincinnati	·60	4, 3	·672	·605	0·5	— 53	48·70	·14	0·4	+ 0·50
Melbourne	·57	3	·675	·668	1·2	+ 10	47·45	·41	0·7	+ 0·23
Vienna	·53	2	·693	·640	0·5	— 18	49·00	·50	0·2	+ 0·14
Pulkowa	·56	15	·623	·664	0·6	+ 6	48·63	·26	1·0	+ 0·38
Cape	·53	8	·683	·647	2·3	— 11	48·99	·63	2·5	+ 0·01
Paris, G. M.	·57	4	·612	·652	0·4	— 6	48·42	·82	0·6	— 0·18
„ C. J.	·59	1	·730	·741	0·3	+ 83	48·30	49·01	0·4	— 0·37
Cordoba	·73	3	·697	·616	1·0	— 42	48·41	48·82	0·6	— 0·18
Greenwich	{·59 ·61}	3, 4	·693	·671	0·7	+ 13	49·26	·24	0·6	+ 0·40
Leipzig	·47	8	·674	·642	1·8	— 16	48·64	·81	1·1	— 0·17
Leiden	·52	3	·713	·672	3·5	+ 14	49·20	·67	1·4	— 0·03
Mt. Hamilton	·47	3	·731	·679	2·2	+ 21	49·36	·84	1·7	— 0·20
Oxford	·57	3	·638	·679	0·7	+ 21	48·83	·46	0·7	+ 0·18
Königsberg	·66	2	·792	·629	0·5	— 29	49·50	·67	0·1	— 0·03
Cambridge (Eng.)	·60	3	·668	·634	0·5	— 24	50·29	·99	0·4	— 0·35
Bordeaux	·65	5	·630	·641	0·5	— 17	48·62	·71	0·6	— 0·07
Cambridge (Mass.)	·52	3	·687	·657	1·1	— 1	48·87	49·04	0·3	— 0·40
Washington	·64	2	·725	·663	1·0	+ 5	47·20	47·10	0·2	+ 1·54
Algiers	·52	—, 1	...	...	...	...	47·29	48·14	0·2	+ 0·50
Naples	·58	11, 10	·639	·657	10·4	— 1	49·30	·92	1·9	— 0·28
Hamburg	·49	1	·570	·536	0·1	— 122	51·40	50·52	0·0	— 1·88

Digitized by Google

Observatory	Epoch	No. obs.	Right Ascension obs.	Right Ascension red.	W.	Diff.	Declination obs.	Declination red.	W.	Diff.
			h m				° ′			
ζ 8m·0			19 57				— 8 0			
			s	s		s	″	″		″
Berlin	89·62	6	4·768	·768	8·1	— 0·005	14·16	14·16	3·2	+ 0·13
Cincinnati	·58	3	·773	·695	0·4	— 77	15·05	·49	0·4	— 0·20
Melbourne	·59	3	·814	·791	1·2	+ 19	12·91	13·87	0·7	+ 0·42
Vienna	·69	3	·879	·805	0·7	+ 32	15·04	14·54	0·3	— 0·25
Pulkowa	·66	10	·712	·760	0·5	— 13	14·74	·37	0·8	— 0·08
Cape	·58	7	·810	·743	2·1	— 30	14·78	·42	2·3	— 0·13
Paris, G. M.	·63	3	·717	·762	0·3	— 11	14·20	·60	0·5	— 0·31
Cordoba	·75	3	·867	·754	1·0	— 19	14·29	·70	0·6	— 0·41
Greenwich	·65	3	·873	·821	0·7	+ 49	15·35	·33	0·5	— 0·04
Leipzig	·46	6	·819	·772	1·5	— 1	14·13	·30	1·0	— 0·01
Leiden	·49	2	·837	·776	2·5	+ 3	14·80	·27	1·0	+ 0·02
Mt. Hamilton	·47	4	·856	·779	2·5	+ 7	14·87	·35	2·1	— 0·06
Oxford	·69	3	·765	·774	0·7	+ 1	14·61	·24	0·7	+ 0·05
Königsberg	·53	1	5·126	·835	0·3	+ 62	15·23	·83	0·1	— 0·54
Dublin	·44	1	4·904	·833	0·2	+ 60	13·31	13·10	0·2	+ 1·19
Cambridge (Eng.)	·62	3	·828	·750	0·5	— 23	14·70	·40	0·4	+ 0·89
Bordeaux	·64	1	·780	·756	0·1	— 17	16·30	16·39	0·1	— 2·10
Cambridge (Mass.)	·47	3	·817	·754	0·4	— 19	13·30	13·47	0·3	+ 0·82
Algiers	·57	1	·744	·738	0·3	— 35	15·27	16·12	0·2	— 1·83
Naples	·58	7	·767	·780	7·9	+ 7	14·70	14·32	1·7	— 0·03
Hamburg	·57	1	·810	·775	0·1	+ 3	12·50	11·62	0·0	+ 2·67
			h m				° ′			
η 8m·1			19 57				— 4 56			
			s	s		s	″	″		″
Berlin	89·56	7	21·717	·717	9·0	— 0·010	27·93	27·93	3·4	+ 0·04
Cincinnati	·56	3	·853	·775	0·4	+ 48	27·67	·11	0·4	+ 0·86
Melbourne	·52	3	·738	·714	1·2	— 13	27·72	28·68	0·7	— 0·71
Vienna	·70	3	·781	·706	0·7	— 21	28·79	·29	0·3	— 0·32
Pulkowa	·62	10, 9	·669	·718	0·5	— 9	28·64	·27	0·8	— 0·30
Cape	·60	7	·855	·786	2·1	+ 59	28·28	27·92	2·3	+ 0·05
Paris, G. M.	·58	4	·620	·665	0·4	— 62	27·45	·85	0·6	+ 0·12
„ C. J.	·59	1	·710	·710	0·3	— 17	27·40	28·11	0·4	— 0·14
Cordoba	·68	3	·887	·772	1·0	+ 45	27·17	27·58	0·6	+ 0·39
Greenwich	·65	4, 3	·725	·672	0·9	— 55	29·00	·98	0·5	— 0·01
Leipzig	·47	4	·717	·669	1·1	— 58	27·89	28·06	0·7	— 0·09
Leiden	·46	2	·827	·765	2·5	+ 38	28·49	27·96	1·0	+ 0·01
Mt. Hamilton	·49	3	·810	·732	2·2	+ 5	28·63	28·11	1·7	— 0·14
Oxford	·65	2	·719	·726	0·5	— 1	28·40	·03	0·5	— 0·06
Königsberg	·52	1	22·109	·809	0·3	+ 82	28·04	27·66	0·1	+ 0·31
Dublin	·61	2	21·790	·715	0·3	— 12	27·36	·75	0·3	+ 0·22
Cambridge (Eng.)	·60	3	·770	·689	0·5	— 38	29·71	28·41	0·4	— 0·44
Bordeaux	·61	2	·770	·743	0·2	+ 16	27·85	27·94	0·3	+ 0·03
Cambridge (Mass.)	·44	3	·770	·705	0·4	— 22	28·00	28·17	0·3	— 0·20
Washington	·59	2	·820	·724	1·0	— 3	28·25	·15	0·2	— 0·18

Digitized by Google

Observatory	Epoch	No. obs.	Right Ascension obs.	Right Ascension red.	W.	Diff.	Declination obs.	Declination red.	W.	Diff.
			h m				° ′			
η—cont.			19 57				− 4 56			
Algiers	89·62	2	s 21·730	s ·723	0·5	− s 0·004	′ 27·20	′ 28·05	0·3	− ′ 0·08
Naples	·55	9	·711	·721	9·3	− 6	28·09	27·71	1·8	+ 0·26
Hamburg	·59	1	·760	·725	0·1	− 2	27·50	26·62	0·0	+ 1·35
			h m				° ′			
m θ 8·4			19 59				− 6 53			
Berlin	89·62	6	s 23·784	s ·784	8·1	s 0·000	′ 57·51	′ 57·51	3·2	− ′ 0·10
Cincinnati	·56	3	·812	·732	0·4	− 52	58·13	·57	0·4	− 0·16
Melbourne	·55	3	·832	·805	1·2	+ 21	56·34	·30	0·7	+ 0·11
Vienna	·55	2	·863	·783	0·5	− 1	58·17	·67	0·2	− 0·26
Pulkowa	·59	10	·668	·718	0·5	− 66	56·79	56·42	0·8	+ 0·99
Cape	·62	8	·853	·777	2·3	− 7	57·85	57·49	2·5	− 0·08
Paris, G. M.	·54	6	·747	·793	0·6	+ 9	57·14	·54	0·7	− 0·13
„ C. J.	·55	2	·800	·798	0·5	+ 14	56·40	·11	0·6	+ 0·30
Cordoba	·70	3	·900	·778	1·0	− 6	56·72	·13	0·6	+ 0·28
Greenwich	·65	4	·885	·826	0·9	+ 42	57·55	56·53	0·6	+ 0·88
Leipzig	·48	6	·815	·764	1·5	− 20	57·39	57·56	1·0	− 0·15
Leiden	·56	3, 4	·844	·776	3·5	− 8	58·12	·59	1·7	− 0·18
Mt. Hamilton	·49	3	·889	·806	2·2	+ 22	57·92	·40	1·7	+ 0·01
Oxford	·60	3	·721	·721	0·7	− 63	57·45	·08	0·7	+ 0·33
Königsberg	·60	1	24·107	·779	0·3	− 5	57·38	·09	0·1	+ 0·32
Cambridge (Eng.)	·60	4	23·842	·751	0·6	− 33	58·42	·12	0·5	+ 0·29
Bordeaux	·59	3	·833	·799	0·3	+ 15	57·63	·72	0·4	− 0·31
Cambridge (Mass.)	·46	5	·898	·826	0·6	+ 42	57·32	·49	0·4	− 0·08
Washington	·62	2	·925	·822	1·0	+ 38	59·15	59·05	0·2	− 1·64
Algiers	·45	3	·787	·776	0·6	− 8	56·83	57·68	0·5	− 0·27
Naples	·66	7	·777	·786	7·9	+ 2	58·02	·64	1·7	− 0·23
Hamburg	·62	2	·790	·755	0·1	− 29	59·47	58·59	0·1	− 1·18
			h m				° ′			
m ι 7·0			20 0				− 4 44			
Berlin	89·62	4	s 44·852	s ·852	6·1	+ s 0·006	′ 3·95	′ 3·95	2·5	+ ′ 0·16
Cincinnati	·56	3	·975	·905	0·4	+ 59	5·10	4·54	0·4	− 0·43
Melbourne	·51	3	·826	·815	1·2	− 31	4·86	5·82	0·7	− 1·71
Vienna	·60	2	·952	·892	0·5	+ 46	4·83	4·33	0·2	− 0·22
Pulkowa	·54	8	·785	·828	0·4	− 18	4·44	·07	0·7	+ 0·04
Cape	·58	6	·913	·868	1·8	+ 22	4·02	3·66	2·1	+ 0·45
Paris, G. M.	·57	5	·800	·841	0·5	− 4	4·06	4·46	0·6	− 0·35
„ C. J.	·59	2	·890	·898	0·5	+ 53	3·80	·51	0·6	− 0·40
Cordoba	·68	3	·960	·870	1·0	+ 24	2·82	3·23	0·6	+ 0·88
Greenwich	·58	4	·862	·832	0·9	− 14	5·19	4·17	0·6	− 0·06
Leipzig	·48	6	·897	·861	1·5	+ 15	4·49	·66	1·0	− 0·55
Leiden	·54	2	·868	·819	2·5	− 27	5·09	·56	1·0	− 0·45
Mt. Hamilton	·47	3	·893	·834	2·2	− 12	4·51	3·99	1·7	+ 0·12

Digitized by Google

Observatory	Epoch	No. obs.	Right Ascension obs.	Right Ascension red.	W.	Diff.	Declination obs.	Declination red.	W.	Diff.
			h m				° ′			
ι—*cont.*			20 0				— 4 44			
			s	s		s	″	″		″
Oxford	89·64	3	44·796	·828	0·7	— 0·018	4·22	3·85	0·7	+ 0·26
Königsberg	·72	1, —	45·035	·833	0·3	— 13	...	...	...	...
Dublin	·63	1	44·851	·819	0·2	— 27	3·83	·62	0·2	+ 0·49
Cambridge (Eng.)	·58	2	·928	·881	0·3	+ 36	5·50	4·20	0·3	— 0·09
Bordeaux	·58	2	·905	·906	0·2	+ 60	4·30	·39	0·3	— 0·28
Cambridge (Mass.)	·46	2	·920	·881	0·8	+ 35	4·10	·27	0·2	— 0·16
Washington	·65	1	·920	·849	0·5	+ 3	3·20	3·10	0·1	+ 1·01
Naples	·58	6	·818	·836	7·1	— 10	4·22	·84	1·6	+ 0·27
Hamburg	·62	2	·810	·776	0·1	— 70	4·45	·57	0·1	+ 0·54
			h m				° ′			
ι' m 7·9			20 0				— 7 19			
			s	s		s	″	″		″
Berlin	89·73	2	46·683	·683	3·5	+ 0·006	55·33	55·33	1·6	+ 0·16
Melbourne	·58	5	·714	·693	1·8	+ 16	54·26	·22	1·1	+ 0·27
Cape	·57	10	·748	·683	2·7	+ 7	55·98	·62	2·9	— 0·13
Paris, G. M.	·58	5, 6	·594	·639	0·5	— 38	55·24	·64	0·7	— 0·15
„ C. J.	·58	3	·717	·719	0·7	+ 42	54·63	·34	0·8	+ 0·15
Cordoba	·66	5	·796	·685	1·3	+ 8	54·96	·37	0·8	+ 0·12
Greenwich	·66	5, 6	·716	·668	1·0	— 9	56·82	·80	0·8	— 0·31
Leipzig	·48	7	·730	·684	1·7	+ 7	55·40	·57	1·1	— 0·08
Mt. Hamilton	·48	4, 5	·722	·647	2·5	— 30	55·60	·08	2·3	+ 0·41
Oxford	·61	4	·649	·660	0·9	— 17	56·04	·67	0·9	— 0·18
Dublin	·51	1	·823	·756	0·2	+ 79	56·52	56·31	0·2	— 0·82
Cambridge (Eng.)	·60	5	·749	·674	0·7	— 3	56·40	55·10	0·5	+ 0·39
Bordeaux	·64	5	·688	·667	0·5	— 10	55·00	·09	0·6	+ 0·40
Cambridge (Mass.)	·50	5	·704	·643	0·9	— 34	56·26	56·43	0·4	— 0·94
Washington	·64	1	·730	·638	0·5	— 39	56·80	·70	0·1	— 1·21
Algiers	·63	2	·710	·705	0·5	+ 28	54·55	55·40	0·3	+ 0·09
Naples	·59	9	·667	·680	9·3	+ 3	56·13	·75	1·8	— 0·26
Hamburg	·58	2	·782	·748	0·1	+ 71	56·87	·99	0·1	— 0·50
			h m				° ′			
κ m 7·5			20 1				— 8 29			
			s	s		s	″	″		″
Berlin	89·63	4	3·687	·687	6·1	+ 0·005	58·91	58·91	2·5	+ 0·22
Cincinnati	·57	3	·790	·716	0·4	+ 34	59·50	·94	0·4	+ 0·19
Melbourne	·54	3	·670	·653	1·2	— 29	57·77	·75	0·7	+ 0·38
Vienna	·68	3	·733	·666	0·7	— 16	59·68	59·18	0·3	— 0·05
Pulkowa	·56	8	·618	·663	0·4	— 19	59·59	·22	0·7	— 0·09
Cape	·58	7	·702	·646	2·1	— 36	59·62	·26	2·3	— 0·13
Paris, G. M.	·63	3	·677	·720	0·3	+ 38	58·60	·00	0·5	+ 0·13
„ C. J.	·59	2	·695	·700	0·5	+ 18	59·20	·91	0·6	— 0·78
Cordoba	·64	5	·775	·673	1·3	— 8	58·87	·28	0·8	— 0·15
Greenwich	·66	3	·730	·690	0·7	+ 8	60·06	·04	0·5	+ 0·09
Leipzig	·54	6	·738	·696	1·5	+ 15	58·59	58·76	1·0	+ 0·37
Leiden	·51	1	·763	·707	1·3	+ 25	59·56	59·03	0·5	+ 0·10

Digitized by Google

Observatory	Epoch	No. obs.	Right Ascension obs.	Right Ascension red.	W.	Diff.	Declination obs.	Declination red.	W.	Diff.
			h m				° ′			
κ—*cont.*			20 1				— 8 29			
			s	s		s	″	″		″
Mt. Hamilton	89·44	2	3·780	·712	1·7	+ 0·030	59·57	59·05	1·3	+ 0·08
Oxford	·62	3	·616	·636	0·7	— 46	59·54	·17	0·7	— 0·04
Königsberg	·65	1	·950	·703	0·3	+ 21	58·94	58·38	0·1	+ 0·75
Cambridge (Eng.)	·60	2	·756	·694	0·3	+ 12	59·78	·48	0·3	+ 0·65
Bordeaux	·57	1	·650	·639	0·1	— 43	58·40	·49	0·1	+ 0·64
Cambridge (Mass.)	·48	2	·735	·684	0·4	+ 2	58·60	·77	0·2	+ 0·36
Washington	·60	2	·760	·677	1·0	— 5	59·05	·95	0·2	+ 0·18
Algiers	·57	2	·680	·681	0·5	— 1	58·95	59·80	0·3	— 0·67
Naples	·62	4	·666	·681	5·3	— 1	59·97	·59	1·4	— 0·46
Hamburg	·58	3	·710	·676	0·2	— 6	61·13	60·25	0·1	— 1·12
			h m				° ′			
λ 8·1			20 2				— 7 20			
			s	s		s	″	″		″
Berlin	89·65	9	45·797	·797	10·4	0·000	33·06	33·06	3·8	+ 0·01
Cincinnati	·56	5	·885	·807	0·6	+ 10	33·07	32·51	0·6	+ 0·56
Vienna	·72	4	·897	·822	0·9	+ 25	34·24	33·74	0·4	— 0·67
Pulkowa	·62 / ·61	17, 16	·781	·830	0·6	+ 33	32·95	32·58	1·0	+ 0·49
Cape	·59	11	·876	·807	2·9	+ 10	33·71	33·35	3·1	— 0·28
Leipzig	·53	8	·866	·818	1·8	+ 21	32·70	32·87	1·1	+ 0·20
Leiden	·54	4	·850	·785	4·5	— 12	33·32	·79	1·7	+ 0·28
Oxford	·51	2	·742	·749	0·5	— 48	33·54	33·17	0·5	— 0·10
Königsberg	·66	5	46·036	·754	0·9	— 43	34·61	34·23	0·3	— 1·16
			h m				° ′			
μ 6·5			20 5				— 9 10			
			s	s		s	″	″		″
Berlin	89·56	9	8·914	·914	10·4	— 0·006	12·77	12·77	3·8	— 0·18
Cincinnati	·55	5	9·005	·938	0·6	+ 18	13·76	13·20	0·6	— 0·61
Melbourne	·52	5	8·940	·934	1·8	+ 15	11·32	12·28	1·1	+ 0·31
Vienna	·56	3	9·004	·952	0·7	+ 32	13·27	·77	0·3	— 0·18
Pulkowa	·55	15	8·895	·935	0·6	+ 15	13·50	13·13	1·0	— 0·54
Cape	·51	15	·944	·910	3·6	— 10	13·02	12·66	3·6	— 0·07
Paris, G. M.	·56	9	·861	·901	0·8	— 19	12·39	·79	0·9	— 0·20
„ C. J.	·59	5	·904	·916	0·9	— 4	11·62	·33	1·0	+ 0·26
Cordoba	·65	5	·995	·917	1·3	— 3	12·71	13·12	0·8	— 0·53
Greenwich	·58	5	9·018	·998	1·0	+ 78	13·23	12·21	0·7	+ 0·38
Leipzig	·50	14	8·955	·924	2·6	+ 5	12·22	·39	1·4	+ 0·20
Leiden	·49	8	·976	·931	7·5	+ 11	13·34	·81	2·7	— 0·22
Mt. Hamilton	·47	4, 6	·955	·904	2·5	— 15	12·91	·39	2·6	+ 0·20
Oxford	·55	3	·878	·921	0·7	+ 1	12·68	·31	0·7	+ 0·28
Königsberg	·52	7	9·076	·918	1·0	— 2	13·40	12·54	0·4	+ 0·05
Dublin	·59	4	8·926	·914	0·6	— 6	12·99	·78	0·5	— 0·19
Cambridge (Eng.)	·56	7	·969	·938	0·9	+ 18	12·95	11·65	0·6	+ 0·94
Bordeaux	·61	5	·914	·928	0·5	+ 8	11·84	·93	0·6	+ 0·66
Cambridge (Mass.)	·45	5	·898	·871	1·6	— 49	13·26	13·43	0·4	— 0·84

Digitized by Google

Observatory	Epoch	No. obs.	Right Ascension		W.	Diff.	Declination		W.	Diff.
			obs.	red.			obs.	red.		
			h m				° ′			
μ—cont.			20 5				— 9 10			
			s	s		s	″	″		″
Washington	{89·59 ·61}	5, 4	8·983	·923	2·1	+ 0·003	12·52	12·42	0·4	+ 0·17
Algiers	·55	10	·859	·873	1·1	— 47	11·96	·81	1·3	— 0·22
Naples	·59	27, 25	·896	·919	15·6	— 1	12·64	·26	2·2	+ 0·33
Hamburg	·59	5	9·042	·008	0·3	+ 88	12·85	11·97	0·2	+ 0·62
	m		h m				° ′			
C 6·4			20 14				— 6 42			
			s	s		s	″	″		″
Berlin	89·57	26	31·511	·511	16·4	— 0·004	28·46	28·46	5·2	— 0·03
Cincinnati	·57	12	·578	·512	1·6	— 3	29·21	·65	1·5	— 0·22
Melbourne	·59	20, 22	·523	·515	4·8	0	27·49	·45	2·4	— 0·02
Vienna	·57	7	·594	·543	1·2	+ 28	28·89	·39	0·8	+ 0·04
Pulkowa	·69	8	·491	·530	0·4	+ 15	28·89	·52	0·7	— 0·09
Cape	·56	52	·557	·525	7·0	+ 10	28·87	·51	5·7	— 0·08
Paris, G. M.	·64	8	·529	·568	1·0	+ 53	28·21	·61	0·8	— 0·18
„ C. J.	·60	1	·460	·473	0·4	— 42	28·20	·91	0·5	— 0·48
Greenwich	·66	18, 16	·521	·503	2·0	— 12	29·79	·77	1·5	+ 0·34
Leipzig	·52	32	·541	·512	4·5	— 3	28·39	·56	2·2	— 0·13
Leiden	·52	12	·560	·511	9·7	— 4	28·62	·09	3·4	+ 0·34
Königsberg	·60	20, 19	·675	·520	1·5	+ 5	29·41	·52	0·9	— 0·09
Dublin	·56	5	·541	·533	1·1	+ 18	29·06	·85	0·8	— 0·42
Cambridge (Eng.)	·59	9	·514	·486	1·2	— 29	29·28	27·98	0·6	+ 0·45
„ (Mass.)	·51	11	·541	·516	2·4	+ 1	27·48	·65	0·6	+ 0·78
Algiers	·55	9, 10	·504	·520	1·0	+ 5	27·33	28·18	1·3	+ 0·25
Naples	·56	45	·489	·516	18·1	+ 1	28·64	·26	2·3	+ 0·17
Hamburg	·58	9	·556	·522	0·8	+ 7	29·53	·65	0·6	— 0·22
	m		h m				° ′			
D 6·1			20 19				— 3 9			
			s	s		s	″	″		″
Berlin	89·57	26	55·071	·071	16·4	— 0·005	35·30	35·30	5·2	+ 0·20
Cincinnati	·57	11	·162	·098	1·5	+ 22	36·13	·57	1·5	— 0·07
Melbourne	·59	21, 22	·080	·079	4·8	+ 3	34·57	·53	2·4	— 0·03
Vienna	·56	6	·118	·072	1·1	— 4	35·83	·33	0·7	+ 0·17
Pulkowa	·69	8	·008	·046	0·4	— 30	35·41	·04	0·7	+ 0·46
Cape	·56	52	·116	·091	7·0	+ 15	35·85	·49	5·7	+ 0·01
Paris, G. M.	·65	5, 6	·048	·086	0·5	+ 10	35·17	·57	0·7	— 0·07
„ C. J.	·61	1	·090	·105	0·3	+ 29	34·60	·31	0·5	+ 0·19
Greenwich	·68	19	·082	·070	2·1	— 6	36·73	·71	1·6	— 0·21
Leipzig	·52	32	·082	·056	4·5	— 20	35·59	·76	2·2	— 0·26
Leiden	·52	11	·117	·068	9·3	— 8	36·20	·63	3·2	— 0·13
Königsberg	·62	18, 17	·226	·096	1·5	+ 20	36·49	·51	0·8	— 0·01
Dublin	·59	4	·023	·026	1·0	— 50	35·04	34·83	0·7	+ 0·67
Cambridge (Eng.)	·60	8	·100	·082	1·1	+ 6	36·28	·98	0·6	+ 0·52
„ (Mass.)	·51	11	·106	·088	2·4	+ 12	35·75	35·92	0·6	— 0·42
Algiers	·54	10	·079	·099	1·1	+ 23	35·09	·94	1·3	— 0·44
Naples	·55	47	·050	·082	18·2	+ 6	35·83	·45	2·3	+ 0·05
Hamburg	·58	11, 9	·082	·049	0·9	— 27	36·44	·56	0·6	— 0·06

Digitized by Google

Investigation of Proper Motions.

The previous observations of the *Victoria* stars were collected from the catalogues, precessions computed and the positions brought up to M. E. 1889, by Dr. de Ball early in 1890. At his request, Mr. Bossert kindly communicated the results of his new reduction from the *Histoire Céleste*, and the places contained in the fourth volume of the Paris Catalogue, not yet published, which are given in the following table under the authority Paris II (division of Paris Catalogue for 1860) and Paris III (division 1875). Some positions, Paris IV, were also communicated by Mr. Bossert from the MS. of a supplementary catalogue of Lalande Stars for M. E. 1885. The results of Lamont's zone-observations and of Bauschinger's observations, contained in the two Munich Catalogues for 1880 (not then published), were kindly communicated by Dr. Bauschinger.

The further discussion of the places received from Dr. de Ball in 1890 was made before the computations for the new reduction-tables, *Astr. Nach.* No. 3195–6, had been made. The reductions of the Right Ascensions to the system of the A.G.C. given in the column " Red." of the following table are in most cases, therefore, only roughly approximate. Only in few cases could the reduction be taken from the tables contained in Publ. XVII of the A. G., or from corresponding tables given with reports in the *V.J.S.* of the A. G. For the older Greenwich catalogues, and the Paris results, approximate reductions to the A.G.C. system were derived by combining the tables *V.J.S.*, Vol. IV, 1869, p. 321, with those of Publ. XVII. For the other catalogues, the reductions to " Wolfers " were taken from Vol. VII of the Bonn observations (only using for Bessel's Zones the reduction $-0^s{\cdot}010$ instead of Argelander's value) and the constant $-0^s{\cdot}038$ added to them as approximate difference A.G.C. $-$ W.

The Right Ascensions thus reduced, and contained in the seventh column of the following table, were considered to agree systematically with the Right Ascensions N_3, with which they were compared to determine the proper motions.

The new Declinations N_3, used for the same purpose, are referred to the system of fundamental stars for the southern zones of the A. G., differing from the older A.G.C. (1875) by $+0''{\cdot}50 \; -0''{\cdot}02 \; \delta°$. This latter correction, therefore, was applied to the reductions to A.G.C., taken from the then existing tables for some of the later catalogues, while for most of the earlier catalogues reductions to a " Mean system,"

Digitized by Google

defined in No. 1536 of the *Astr. Nach.*, could be taken from the collection of tables *A. N.* 1532–36, which may be considered to make the Declinations very nearly agree systematically with the new determinations. For Schjellerup, Argelander's reduction to "Wolfers" was used.

For Lamont's observations, a roughly approximate reduction could be derived only from the positions of the *Victoria* stars themselves communicated by Dr. Bauschinger.

Apparent proper motions were determined by comparing the reduced catalogue places singly, or means from groups belonging to nearly the same epoch (in some cases, means from repeated determinations at the same observatory though made at epochs rather distant from one another), with the new positions, which are of a very much higher accuracy than nearly all of the catalogue places. Weights were given to the separate determinations of proper motion according to the estimated accuracy of the catalogue place employed and to the interval, and thus mean proper motions were derived which are given in the first column of the following table. Bringing up, by these adopted annual proper motions, the reduced catalogue places to the epochs of the new positions, the differences from these, or very nearly the errors of the catalogue places, were found which are given in the last column of the table.

For example, the determination of proper motion for star **A** was made as follows. In this case means from the observations made before 1870 were used, the determinations being more numerous and grouping around some distinct epochs.

Apparent proper motion				Hence annual proper motion				
	s	″		s		″		
in 135 years	− 0·094	+ 0·38	w. 4, 2	− 0·0007	w. 729	+ 0·003	w. 364	
90	+ 0·083	− 1·00	2, 3	+ 9	162	− 11	243	
57	− 0·024	− 0·65	6, 4	− 4	195	− 12	130	
38 (39)	− 0·023	− 0·29	3, 6	− 6	43	− 8	91	
27 (26)	+ 0·015	− 0·41	8, 8	+ 5	58	− 16	54	
				Mean: − 0·0004	(1187)	− 0·005	(882)	

For star **a**, which affords an example of the treatment of most of the *Victoria* comparison stars, the following was the computation :—

		observed difference			annual proper motion		
		s	″		s	″	
Lal.	95 y.	− 0·291	− 2·99	w. ½	− 0·0031	− 0·031	w. 45
BZ.	66 „	+ 0·100	+ 0·40	„ 1	+ 0·0015	+ 0·006	„ 44
Lam.	35 „	+ 0·013	− 0·04	„ 4	+ 0·0004	− 0·001	„ 49
Par.	26 „	− 0·076	− 0·64	„ 2	− 0·0029	− 0·025	„ 14
					− 0·0006	− 0·010	(152)

Digitized by Google

Catalogue Places of Victoria Stars and Comparison with New Results (Normals N_8).

Star's Designation and Assumed Proper Motion	Authority	R.A., 1889	Epoch	No. of observations	Reduction to A.G.C.	Reduced R.A. for Epoch	Dec., 1889	Epoch	No. of observations	Reduction to Mean Syst.	Reduced Dec. for Epoch	Outstanding Error	
A		h m s			s	s	° ′ ″			″	″	s	″
—0ˢ·0004	Bradl. 2415	19 6 39·526	1754·1	9	0·000	39·53	— 8 7 27·77	1754·1	4	0·00	27·8	+0·04	—1·1
—0″·005	Pi. 19h. 16	39·266	1800:	10	+ 83	35	24·14	1800:	10	—2·25	26·4	—0·12	+0·5
	Pond 832	39·616	31:	10	— 75	54	25·40	31·0	12	—1·40	26·8	+0·09	+0·3
	Tayl. 8819	39·649	35:	6	— 98	55	26·21	35:	6	—0·40	26·6	+0·10	+0·5
	Rob. 3967	39·269	33·0	5	+ 7	28	24·90	50·9	3	—0·83	25·7	—0·18	+1·5
	Grw. 12 y. 1690	39·349	40	1	+ 136:	48	26·69	45	5	—0·77	27·5	+0·03	—0·3
	Pulk. 2713	39·427	54·1	4	+ 20	45	28·18	54·1	4	+0·57	27·6	0·00	—0·4
	Lam. 19143	39·410	57·0	9	— 120:	29	29·23	57·0	9	+1·2:	28·0	—0·15	—0·8
	Grw. 7 y. 1549	39·348	59·5	3	+ 64	41	27·03	59·5	3	+0·14	26·9	—0·03	+0·3
	Yarn. 8351	39·438	65·0	7	+ 56	49	26·83	61·6	6	+0·20	26·6	+0·05	+0·6
	Quet. 7970	39·346	61·4	6	+ 38	38	27·06	66·3	3	—0·20	27·3	—0·06	0·0
	Glasg. 4730	39·256	65·7	3	+ 124	38	26·74	65·7	3	—0·28	27·0	—0·06	+0·2
	Arm. II. 2373	39·347	81·6	1	— 16	33	28·03	81·6	1	+0·88	27·1	—0·10	+0·2
	Grw. 10 y. 3107	39·385	86·0	12	+ 28	41	28·09	86·3	22	+0·73	27·4	—0·02	0·0
	New Obs.	39·432	89·6			43	27·39	89·6			27·4	0·00	0·0
B													
+0ˢ·0059	Bradl. 2435	19 14 36·540	1753·7	5	0·000	36·54	— 5 37 28·03	1754·2	3	0·00	28·0	0·00	—1·7
+0″·043	Lal. H.C.	36·125	94·5	1	+ 89	21	22·91	94·5	1	—2·03	24·9	+0·43	—0·3
	Pi. 19h. 66	36·715	1800:	12	+ 89	80	20·81	1800:	12	—2·03	22·8	—0·01	+1·5
	B.Z. 187	36·865	23·7	1	— 48	82	26·06	23·7	1	+1·18	24·9	—0·13	—1·5
	Wrott. 1021	37·008	33:	11	+ 42	37·05						+0·04	
	Tayl. 8879	37·012	35:	2	— 94	36·92	24·43	35:	3	—0·45	24·9	—0·10	—2·0
	Rob. 4011	37·052	42·2	2	+ 7	37·06	20·64	53·6	1	—0·98	21·6	0·00	0·0
	Grw. 12 y. 1708	36·998	44	3	+ 143	14	23·05	44	4	+0·27	22·8	+0·07	—0·3
	Sant. 2. III, 363	36·992	44·6	2	+ 12	00	23·16	44·6	2	+1·52	21·6	—0·07	+0·8
	Lam. 19702	37·147	55·5	5	— 120:	03	22·64	55·5	5	+1·2:	21·4	—0·11	+0·6
	Paris II	37·093	56·6	2	+ 60:	15	21·52	56·6	1	+0·21:	21·3	+0·01	+0·6
	Radcl. II. 1844	37·083	57·8	4	— 38	04	23·82	58·1	4	+0·75	23·1	—0·11	—1·2
	Pulk. 2741	37·172	62·3	4	+ 21	19	21·84	62·3	4	+0·52	21·3	+0·01	+0·4
	Kbg. Abth. 37	37·385	63·7	1			23·31	63·7	1			[+0·20	—1·6]
	Yarn. 8428	37·183	71·3	3	+ 52	23	22·92	57·7	2	+0·16	22·8	0·00	—0·8
	Quet. 8065	37·422	67·3	3	+ 38	46	21·58	65·6	4	+0·20	21·4	+0·15	+0·2
	Paris III	37·284	74·6	2	+ 60:	34	20·02	74·6	2	+0·21:	19·8	+0·09	+1·4
	Becker 414	37·254	77·5	4	0	25	21·37	77·5	4	+0·61	20·8	—0·01	+0·3
	Grw. 10 y. 3138	37·303	85·9	6	+ 29	33	22·02	86·1	11	+0·69	21·3	+0·01	—0·6
	New Obs.	37·340	89·6			34	20·54	89·6			20·5	0·00	0·0

Digitized by Google

Star's Designation and Assumed Proper Motion	Authority	R.A., 1889	Epoch	No. of Observations	Reduction to A.G.C.	Reduced R.A. for Epoch	Declination, 1889	Epoch	No. of Observations	Reduction to Mean Syst.	Reduced Dec. for Epoch	Outstanding Error	
a		h m s			s	s	° ′ ″			″	″	s	″
—0s·0006	Lal. H.C.	19 21 24·397	1794·5	1	+0·088	24·48	— 5 57 15·79	1794·5	1	—2·06	17·8	—0·77	+2·0
—0″·010	B. Z. 187	25·142	1823·7	1	— 48	25·09	22·43	1823·7	1	+1·19	21·2	—0·14	—1·1
	Lam. 20192	25·301	54·8	9	— 120:	18	22·00	52·9	8	+1·2:	20·8	—0·03	—0·3
	Paris II	25·230	58·2	2	+ 60:	29	20·05	58·2	2	+0·22:	19·8	+0·08	+0·7
	„ III	25·169	74·6	1	+ 60:	23	21·17	74·6	1	+0·22:	20·9	+0·03	—0·3
	New Obs.	25·194	89·5			19	20·84	89·5			20·8	0·00	0·0
b													
—0s·001	Lal. H.C.	19 23 2·322	1794·5	1	+ ·083	2·40	— 6 23 57·55	1794·5	1	—2·10	59·6	—0·18	+0·9
0″·00	B. Z. 187	2·730	1823·7	1	— 48	68	62·82	1823·7	1	+1·19	61·6	+0·13	—1·0
	Lam. 20313	2·565	62·0	3	— 120:	45	63·01	62·0	3	+1·2:	61·8	—0·07	—1·2
	Schj. 7347	2·657	62·7	1	+ 59	72	62·50	62·7	1	+0·09	62·5	+0·20	—1·9
	Paris III	2·462	75·6	8	+ 60:	52	59·81	75·6	8	+0·23:	59·6	+0·02	+1·0
	New Obs.	2·489	89·5			49	60·60	89·5			60·6	0·00	0·0
c													
—0s·004	B. Z. 98	19 24 6·580	1822·6	1	— ·048	6·53	— 5 9 8·96	1822·6	1	+0·98	8·0	+0·04	—0·8
+0″·02	Lam. 20388	6·357	50·6	2	— 120:	24	6·82	50·6	2	+1·2:	5·6	—0·10	+0·8
	New Obs.	6·222	89·5			22	5·85	89·5			5·8	0·00	0·0
d													
0s·000	B. Z. 187	19 25 18·100	1823·7	1	— ·048	18·05	— 5 54 12·24	1823·7	1	+1·18	11·1	+0·13	+0·8
—0″·01	Lam. 20494	18·004	53·7	2	— 120:	17·88	14·35	53·7	2	+1·2:	13·1	—0·04	—1·0
	Schj. 7379	17·701	62·8	1	+ 59	76	13·42	62·8	1	+0·09	13·3	—0·17	—1·1
	New Obs.	17·926	89·5			93	12·52	89·5			12·5	0·00	0·0
e													
—0s·004	B. Z. 187	19 25 40·613	1823·7	1	— ·048	40·56	— 5 20 59·96	1823·7	1	+1·16	58·8	+0·01	—0·4
—0″·06	Lam. 20526	40·504	52·9	4	— 120:	38	60·57	52·9	4	+1·2:	59·4	—0·06	+0·7
	Schj. 7385	40·348	62·7	1	+ 59	41	61·00	62·7	1	+0·09	60·9	0·00	—0·2
	New Obs.	40·295	89·6			29	62·32	89·6			62·3	0·00	0·0
f													
—0s·001	Lal. H.C.	19 27 50·676	1794·9	3	+ ·090	50·77	— 4 58 47·39	1794·9	3	—1·99	49·4	+0·17	—0·4
0″·00	B. Z. 187	50·338	1823·7	1	— 48	29	49·83	1823·7	1	+1·15	48·7	—0·27	+0·3
	Rü. 7575[a]	50·779	41	1	+ 23	80						+0·26	
	Sant. 2. III, 366	50·529	44·5	2	+ 12	54	51·99	44·5	2	+1·57	50·4	0·00	—1·4
	Lam. 20712	50·646	58·1	5	— 120:	53	50·78	58·1	4	+1·2:	49·6	0·00	—0·6
	Paris II	50·522	57·6	3	+ 60:	58	48·63	58·8	1	+0·20:	48·4	+0·05	+0·5
	Arm. II. 2454	50·501	70·9	3	+ 8	51	49·43	70·6	4	+0·63	48·8	—0·01	+0·2
	Paris III	50·501	73·1	4	+ 60:	56	48·53	73·1	4	+0·20:	48·3	+0·05	+0·6
	New Obs.	50·497	89·6			50	48·97	89·6			49·0	0·00	0·0

Digitized by Google

Star's Designation and Assumed Proper Motion	Authority	R.A., 1889	Epoch	No. of Observations	Reduction to A.G.C.	Reduced R.A. for Epoch	Declination, 1889	Epoch	No. of Observations	Reduction to Mean Syst.	Reduced Dec. for Epoch	Outstanding Error	
g		h m s			s	s	° ′ ″			s	″	s	″
+0s·001	B. Z. 187	19 28 37·613	1823·7	1	—0·048	37·56·	— 4 41 25·84	1823·7	1	+1·14	24·7	+0·02	—0·1
+0″·02	Schj. 7421–2 ...	37·498	62·6	2	+ 59	56	22·81	62·6	2	+0·09	22·7	—0·03	+1·1
	New Obs.	37·614	89·6			61	23·31	89·6			23·3	0·00	0·0
h													
0s·000	Lal. H.C.	19 29 20·491	1794·6	1	+ ·091	20·58	— 4 32 56·14	1794·6	1	—1·96	58·1	—0·14·	+6·4
—0″·01	B. Z. 98	20·844	1822·6	1	— 48	80	67·66	1822·6	1	+0·97	66·7	+0·07	—1·9·
	Rü. 7609	20·571	41	2	+ 23	59	66·68	41	2	+0·42	66·3	—0·13	—1·3
	Sant. 2. II, 398 ..	20·823	41·7	3	+ 12	83·	69·57	41·7	3	+1·61	68·0	+0·11	—3·0
	Lam. 20832	20·930	53·4	7	— ·120:	81	65·68	52·0	6	+1·2:	64·5	+0·08	+0·5·
	Paris II	20·714	58·6	1	+ 60:	77	64·86	58·8	1	+0·19:	64·7	+0·05	+0·4
	„ III	20·727	77·6	3	+ 60:	79	64·83	77·6	3	+0·19:	64·6	+0·06	+0·7
	New Obs.	20·726	89·5			73	65·41	89·5			65·4	0·00	0·0
i													
	Lam. 20944	19 20 41·339	1856·2	2	— ·120:	41·22	— 5 1 4·01	1856·2	2	+1·2	2·8	+0·08	—0·4
	New Obs.	41·135	89·6			13·	2·44	89·6			2·4	0·00	0·0
k													
+0s·002	Rü. 7642	19 30 53·139	1841	2	+ ·023	53·16	— 4 32 42·95	1841	2	+0·42	42·5	—0·12	—0·1
—0″·02	Lam. 20967	53·476	47·4	4	— 120:	36	42·87	48·6	3	+1·2:	41·7	+0·06	+0·9
	Schj. 7461.....	53·174	62·6	1	+ 59	23	44·92	62·6	1	+0·09	44·8	—0·09	—1·9·
	New Obs.	53·378	89·6			38	43·42				43·4	0·00	0·0
l													
	Lam. 21006	19 31 22·175	1849·2	2	— ·120	22·05·	— 3 43 19·31	1849·2	2	+1·2:	18·1	—0·07	+0·8
	Bau. 8972.....	22·315	84·7	1	0	31·	21·11	84·7	1	+0·57	20·5	+0·19	—1·6
	New. Obs	22·122	89·6			12	18·91	89·6			18·9	0·00	0·0
m													
+0s·0056	Bradl. 2485	19 31 53·255	1755·2	4	0·000	53·25	— 4 53 34·17	1754·1	3	0·00	34·2	+0·01	—0·2
—0″·045	D'Ag. 5078–9 ...	53·284	84·8	1		28	39·68	84·8	2		39·7	—0·13	—4·4
	Lal. H.C.	53·344	95·0	3	+ 90	43	33·32	95·0	3	—1·98	35·3	—0·03	+0·5
	Pi. 19h. 196	53·344	1800:	10	+ 90	43	32·42	1800:	10	—1·98	34·4	—0·06	+1·6
	Wrott 1050.....	53·701	33:	10	+ 42	74						+0·06	
	Tayl. 9020	53·831	35:	5	— 93	74	37·37	35:	5	—0·47	37·8	+0·05	—0·3
	Rob. 4118.....	53·571	32·3	5	+ 7	58	38·17	53·7	2	—1·00	39·2	—0·10	—0·7·
	Rü. 7668						36·91	48	1	+0·43	36·5		+1·7
	Lam. 21054	53·883	51·0	3	— 120:	76	39·53	51·0	3	+1·2:	38·3	—0·02	0·0
	Paris II	53·847	58·1	2	+ 60:	91	37·99	57·0	5	+0·20:	37·8	+0·08·	+0·8
	Rdcl. II. 1869....	53·707	58·3	6	— 38	67	38·89	56·9	4	+0·71	38·2	—0·15	+0·4
	Pulk. 2794	53·862	60·5	4	+ 19	88	39·52	60·5	4	+0·52	39·0	—0·02	—0·3
	Grw. N. 7y. 2156	53·852	65·2	4	+ 72	92	40·44	65·2	4	+0·05	40·4	+0·06	—1·4·
	Quet. 8263	53·762	68·0	3	+ 38	80	39·60	69·1	4	—0·20	39·8	—0·08	—0·7
	Paris III						37·33	69·5	1	+0·20:	37·1		+2·0
	Arm. II. 2470 ...	53·955	80·6	4	+ 8	96	40·42	80·6	4	+0·63	39·8	+0·01·	—0·1·
	New Obs.	53·998	89·6			54·00	40·04	89·6			40·0	0·00	0·0

Digitized by Google

Star's Designation and Assumed Proper Motion	Authority	R.A., 1889	Epoch	No. of Observations	Reduction to A.G.C.	Reduced R.A. for Epoch	Declination, 1889	Epoch	No. of Observations	Reduction to Mean Syst.	Reduced Dec. for Epoch	Outstanding Error	
n		h m s			s	s	° ′ ″			s	″	s	″
—0s·001	Lal. H.C.	19 34 26·757	1794·5	1	+0·088	26·84	— 5 42 2·87	1794·5	1	—2·04	4·9	—0·13	+2·4
0″·00	B. Z. 187	27·070	1823·7	1	— 48	27·02	9·76	1823·7	1	+1·17	8·6	+0·07	—1·3
	Rü. 7730	27·093	43	1	+ 24	27·12	10·99	43	1	+0·44	10·5	+0·18	—3·2
	Sant. 2. III, 368	26·814	44·5	2	+ 12	26·83	8·53	44·5	2	+1·51	7·0	—0·10	+0·3
	Lam. 21263	27·095	52·3	5	— 120:	26·97	8·18	55·2	4	+1·2:	7·0	+0·05	+0·3
	Paris II	26·957	57·6	1	+ 60:	27·02	7·67	56·7	2	+0·21:	7·5	+0·11	—0·1
	Arm. II. 2480	26·781	70·7	5	+ 4	26·78	7·97	70·7	5	+0·67	7·3	—0·12	0·0
	Paris III	26·781	73·4	4	+ 60:	84	7·27	73·4	4	+0·21:	7·1	—0·06	+0·3
	New Obs.	26·885	89·5			88	7·32	89·5			7·3	0·00	0·0
o													
+0s·001	Lam. 21299	19 34 53·561	1848·7	7	— ·120:	53·44	— 4 17 22·76	1848·7	7	+1·2:	21·6	—0·02	—0·1
+0″·01	Bonn VI.	53·590	66·7	1	— 38	55	21·74	66·7	1	0·0	21·7	+0·07	—0·4
	New Obs.	53·506	89·5			51	21·08	89·5			21·1	0·00	0·0
p													
—0s·001	Lal. H.C.	19 35 56·235	1795·7	1	+ ·091	56·33	— 4 32 47·50	1795·7	1	—1·96	49·5	+0·22	—0·1
0″·00	B. Z. 98	56·357	1822·6	1	— 48	31	54·08	1822·6	1	+0·96	53·1	+0·23	—3·8
	Rü. 7768	55·907	41	11	+ 23	55·93	49·18	41	11	+0·42	48·8	—0·12	+0·6
	Lam. 21382	56·188	53·7	4	— 120:	56·07	48·71	53·7	4	+1·2:	47·5	+0·02	+1·8
	Paris II	56·106	59·7	1	+ 60:	17	50·79	60·6	1	+0·19:	50·6	+0·13	—1·2
	Schj. 7525	56·112	62·8	1	+ 59	17	49·20	62·8	1	+0·09	49·1	+0·14	+0·2
	Glasg. 4875	55·980	75·1	4	+ 102	08	48·79	75·8	3	—0·04	48·8	+0·06	+0·5
	Paris III	55·989	77·5	7	+ 60:	05	48·61	77·5	7	+0·19:	48·4	+0·03	+0·9
	New Obs.	56·007	89·6			01	49·36	89·6			49·4	0·00	0·0
q													
—0s·001	B. Z. 187	19 39 24·072	1822·6	1	— ·048	24·02	— 4 47 22·75	1822·6	1	+0·96	21·8	+0·29	+1·2
+0″·01	Rü. 7818	23·471	41	8	+ 23	23·49	24·25	41	8	+0·42	23·8	—0·22	—1·0
	Lam. 21633	23·920	48·0	6	— 120:	80	23·83	48·9	5	+1·2:	22·6	+0·10	+0·1
	Schj. 7574–5	23·638	62·7	2	+ 59	70	21·73	62·7	2	+0·09	21·6	+0·01	0·0
	Glasg. 4891	23·557	75·6	2	+ 104	66	21·60	78·5	2	—0·05	21·6	—0·01	+0·8
	New Obs.	23·662	89·5			66	22·36	89·5			22·4	0·00	0·0
r													
0s·000	Lal. H.C.	19 40 59·259	1795·0	3	+ ·093	59·35	— 3 55 57·56	1795·0	3	—1·93	59·5	—0·14	+1·0
0″·00	B. Z. 98	59·901	1822·6	1	— 48	85	62·46	1822·6	1	+0·94	61·5	+0·36	—1·0
	Lam. 21732	59·462	42·6	3	— 120:	34	62·28	42·1	2	+1·2:	61·1	—0·15	—0·6
	Paris II						61·10	56·6	1	+0·28:	60·8		—0·3
	„ III	59·453	78·6	3	+ 60:	51	59·96	78·6	3	+0·28:	59·7	+0·02	+0·8
	Bau. 9251	59·522	84·6	1	0	52	60·88	84·6	1	+0·58	60·3	+0·03	+0·2
	New Obs.	59·489	89·6			49	60·51	89·6			60·5	0·00	0·0

Digitized by Google

Star's Designation and Assumed Proper Motion	Authority	R.A., 1889	Epoch	No. of Observations	Reduction to A.G.C.	Reduced R.A. for Epoch	Declination, 1889	Epoch	No. of Obervations	Reduction to Mean Syst.	Reduced Dec. for Epoch	Outstanding Error	
s		h m s			s	s	° ′ ″			″	″	s	″
—0s·001	Lal. H.C.	19 41 52·721	1794·5	1	+0·089	52·81	— 5 30 21·12	1794·5	1	—2·02	23·1	—0·57	+0·4
+0″·01	B. Z. 187	53·819	1823·7	1	— 48	53·77	25·24	1823·7	1	+1·16	24·1	+0·42	—0·8
	Lam. 21789	53·412	49·7	4	— 120:	29	25·15	49·7	4	+1·2:	23·9	—0·05	—1·0
	Paris II						21·57	59·5	1	+0·21:	21·4		+1·5
	Schj. 7601	53·306	62·8	1	+ 59	36	22·22	62·8	1	+0·09	22·1	+0·05	+0·7
	Paris III	53·279	73·2	4	+ 60:	34	23·57	71·7	2	+0·21:	23·4	+0·04	—0·6
	New Obs.	53·287	89·6			29	22·58	89·6			22·6	0·00	0·0
t													
—0s·001	Lal. H.C.	19 43 4·416	1795·0	3	+ ·091	4·51	— 4 46 12·76	1795·0	1	—1·98	14·7	—0·05	+1·7
—0″·02	B. Z. 187	4·592	1823·7	1	— 48	54	20·46	1823·7	1	+1·13	19·3	+0·01	—2·4
	Lam. 21862	4·619	51·5	5	— 120:	50	19·51	50·2	6	+1·2:	18·3	0·00	—0·8
	Paris II	4·474	57·5	1	+ 60:	53	17·35	56·5	1	+0·20:	17·1	+0·04	+0·5
	Schj. 7613	4·524	62·7	1	+ 59	58	18·17	62·7	1	+0·09	18·1	+0·09	—0·3
	Paris III	4·296	74·6	3	+ 60:	36	17·87	74·6	3	+0·20:	17·7	—0·12	+0·3
	New Obs.	4·464	89·6			46	18·29	89·6			18·3	0·00	0·0
u													
—0s·002	Lal. H.C.	19 43 43·820	1795·0	3	+ ·090	43·91	— 4 48 22·73	1795·0	3	—1·98	24·7	—0·10	+0·6
0″·00	B. Z. 187	44·100	1823·7	1	— 48	44·05	26·53	1823·7	1	+1·14	25·4	+0·10	—0·1
	Lam. 21900	44·164	53·2	4	— 120:	04	25·34	57·4	3	+1·2:	24·1	+0·15	+1·2
	Paris II	43·982	58·2	2	+ 60:	04						*+0·16	
	,, III	43·785	77·3	3	+ 60:	43·84	25·34	77·2	3	+0·20:	25·1	—0·02	+0·2
	New Obs.	43·818	89·5			82	25·30	89·5			25·3	0·00	0·0
v													
0s·000	Lal. H.C.	19 44 56·203	1794·6	3	+ ·090	56·29	— 4 58 25·78	1794·6	3	—1·99	27·8	+0·11	—0·7
0″·00	B. Z. 98, 187	56·166	1823·2	2	— 48	12	28·85	1823·2	2	+1·14	27·7	—0·07	—0·7
	Rü. 7837	56·089	41	9	+ 23	11	15·99	41	9	+0·43	25·6	—0·07	+1·5*
	Sant.2. {II, 403 / III, 370}	56·302	44·5	4	+ 12	31	27·71	44·5	4	+1·57	26·1	+0·13	+0·9
	Lam. 21978	56·364	54·0	4	— 120:	24	27·50	54·0	4	+1·2:	26·3	+0·06	+0·7
	Paris II	56·168	62·0	2	+ 60:	23	27·28	61·6	3	+0·20:	27·1	+0·04	0·0
	Kbg. Abth. 37	55·993	63·8	1			30·18	63·8	1			[—0·19	—3·1]
	Paris III	56·151	74·6	3	+ 60:	21	28·01	74·6	3	+0·20:	27·8	+0·03	—0·8
	Arm. II. 2515	56·381	80·6	1	+ 9	39	30·31	89·6	1	+0·61	29·7	+0·20	—2·6
	New Obs.	56·185	89·5			18	27·05	89·5			27·0	0·00	0·0
												*With corr.—10″	
w													
—0s·003	B. Z. 98	19 47 27·416	1822·6	1	— ·048	27·37	— 4 51 34·68	1822·6	1	+0·96	33·7	—0·01	—0·7
+0″·01	Lam. 22136	27·457	61·8	1	— 120:	34	33·02	61·8	1	+1·2:	31·8	+0·07	+0·8
	New Obs.	27·179	89·5			18	32·34	89·5			32·3	0·00	0·0

Digitized by Google

Star's Designation and Assumed Proper Motion	Authority	R.A., 1889	Epoch	No. of Observations	Reduction to A.G.C.	Reduced R.A. for Epoch	Declination, 1889	Epoch	No. of Observations	Reduction to Mean Syst.	Reduced Dec. for Epoch	Outstanding Error	
x		h m s			s	s	° ′ ″			″	″	s	″
+0ˢ·003	B. Z. 187	19 48 22·543	1823·7	1	−0·048	22·49	−5 19 63·27	1823·7	1	+1·14	62·1	+0·32	−1·6
+0″·01	Rü. 7843	22·090	41	7	+ 23	11	60·73	41	7	+0·43	60·3	−0·11	−0·1
	Schj. 7665	22·201	62·7	1	+ 59	26	58·68	62·7	1	+0·09	58·6	−0·03	+1·6
	Lam. 22185	22·654	63·8	1	− 120:	53						+0·25	
	Bau. 9447	22·374	84·6	1	0	37	60·16	84·6	1	+0·61	59·5	+0·02	+0·4
	New Obs.	22·372	89·5			37	59·88	89·5			59·9	0·00	0·0
y													
+0ˢ·002	Lal. H.C.	19 51 25·445	1794·6	1	+ ·090	25·53	−4 58 46·78	1794·6	1	−1·99	48·8	−0·14	+1·3
−0″·04	Lam. 22361	26·031	1840·6	1	− 120:	91	53·60	1840·6	1	+1·2:	52·4	+0·14	−0·5
	Paris IV	25·892	82·6	2	+ 60:	95	53·65	82·6	2	+0·2:	53·4	+0·10	+0·1
	New Obs.	25·870	89·5			87	53·87	89·5			53·9	0·00	0·0
z													
0ˢ·00	Lam. 22403	19 52 3·654	1846·6	1	− ·120:	3·53	−5 28 64·30	1846·6	1	+1·2:	63·1	+0·05	+0·1
+0″·1	Bau. 9532	3·494	84·7	1	0	49	59·00	84·7	1	+0·61	58·4	+0·01	+1·0
	New Obs.	3·487	89·6			49	58·92	89·6			58·9	0·00	0·0
a													
−0ˢ·004	Lal. H.C.	19 52 18·384	1794·5	1	+ ·086	18·47	−6 38 50·10	1794·5	1	−2·12	52·2	−0·02	+3·5
0″·00	B. Z. 187	18·329	1823·7	1	− 48	28	58·35	1823·7	1	+1·16	57·2	−0·09	−1·5
	Lam. 22419	18·382	53·4	6	− 120:	26	57·53	55·3	5	+1·2:	56·3	+0·01	−0·6
	New Obs.	18·108	89·6			11	55·72	89·6			55·7	0·00	0·0
β													
−0ˢ·003	Lal. H.C.	19 52 38·203	1795·7	1	+ ·091	38·29	−4 39 17·31	1795·7	1	−1·97	19·3	−0·02	−0·1
+0″·03	B. Z. 98, 187	38·390	1823·2	2	− 48	34	20·59	1823·2	2	+1·11	19·5	+0·15	−1·5
	Lam. 22432	38·257	44·9	4	− 120:	14	18·40	44·9	4	+1·2:	17·2	−0·02	+0·4
	Paris II	37·934	57·1	2	+ 60:	37·99						−0·12	
	,, III	37·943	68·7	2	+ 60:	38·00	17·11	68·7	2	+0·19:	16·9	−0·11	+0·4
	Arm. II. 2539	38·193	80·6	1	+ 11	20	18·41	80·6	1	+0·58	17·8	+0·05	−1·1
	Dubl. 765	38·009	85·1	2	0	01	18·63	85·1	2			−0·03	[−2·2]
	New Obs.	38·022	89·6			02	16·25	89·6			16·2	0·00	0·0
γ													
0ˢ·000	Lal. H.C.	19 54 57·288	1795·0	3	+ ·091	57·38	−4 36 46·49	1795·0	3	−1·96	48·4	+0·08	+1·8
−0″·02	B. Z. 98, 187	57·462	1823·2	2	− 48	41	53·07	1823·2	2	+1·11	52·0	+0·11	−1·1
	Rü. 7868	57·095	41	1	+ 23	12	50·80	41	1	+0·42	50·4	−0·18	+0·9
	Sant. 2. III, 373	57·317	44·5	2	+ 12	33	53·29	44·5	2	+1·61	51·7	+0·03	−0·4
	Lam. 22578	57·336	47·3	6	− 120:	22	53·38	47·3	6	+1·2:	52·2	−0·09	−0·8
	Paris II	57·356	55·6	1	+ 60:	42	50·89	57·6	2	+0·19	50·7	+0·11	+0·9
	Glasg. 4962	57·394	72·6	3	+ 104	50	50·88	73·9	3	−0·09	51·0	+0·20	+1·0
	Paris III	57·195	74·0	3	+ 60:	25	51·70	74·0	3	+0·19	51·5	−0·05	+0·3
	Bau. 9598	57·446	84·6	1	0	45	53·98	84·6	1	+0·59	53·4	+0·14	−1·3
	New Obs.	57·302	89·6			30	52·20	89·6			52·2	0·00	0·0

Digitized by Google

Star's Designation and Assumed Proper Motion	Authority	R.A., 1889	Epoch	No. of Observations	Reduction to A.G.C.	Reduced R.A. for Epoch	Declination, 1889	Epoch	No. of Observations	Reduction to Mean Syst.	Reduced Dec. for Epoch	Outstanding Error	
δ		h m s			s	s	° ′ ″			″	″	s	″
—0s·002	B. Z. 187	19 55 40·083	1823·7	1	—0·048	40·03·	— 6 40 51·58	1823·7	1	+1·16	50·4	+0·16	—0·1
+0″·02	Lam. 22629	39·878	48·5	5	— 120:	39·76	51·30	48·5	5	+1·2:	50·1	—0·06	—0·3
	Schj. 7744	39·675	62·8	1	+ 59	73	48·68	62·8	1	+0·09	48·6	—0·06	+1·0
	New Obs.	39·739	89·6			74	49·02	89·6			49·0	0·00	0·0
ε													
+0s·001	Lal. H.C.	19 56 17·521	1795·1	2	+ ·090	17·61	— 5 17 44·26	1795·1	2	—2·00	46·3	+0·04	+0·5
—0″·02	Rü. 7893	17·527	1841	3	+ 23	55	48·89	1841	3	+0·43	48·5	—0·06	—0·8
	Lam. 22683	17·710	50·7	2	— 120:	59	48·27	50·7	2	+1·2:	47·1	—0·03	+0·8
	Paris II	17·706	56·6	1	+ 60:	77	48·73	55·6	1	+0·21:	48·5	+0·14	—0·5
	Arm. II 2555 ...	17·507	69·4	6	+ 8	51·	47·88	·70·4	5	+0·62	47·3	—0·13	+1·0
	Paris III	17·757	74·6	1	+ 60:	82	49·08	74·6	1	+0·21:	48·9	+0·17	—0·5
	„ IV	17·684	83·6	4	+ 60:	74	48·76	83·6	4	+0·2:	48·5	+0·09	0·0
	New Obs.	17·662	89·5			66	48·66	89·5			48·7	0·00	0·0
ζ													
	Lam. 22727	19 57 4·880	1854·2	4	— ·120:	4·76	— 8 0 11·93	1854·2	4	+1·2:	10·7	—0·02	+3·6
	New Obs.	4·778	89·6			78	14·29	89·6				0·00	0·0
η													
—0s·004	Lal. H.C.	19 57 21·730	1794·6	1	+ ·090	21·82	— 4 56 27·23	1794·6	1	—1·99	29·2	—0·28	+0·6
+0″·02	B. Z. 98, 187.....	22·109	1823·2	2	— 48	22·06	30·43	1823·2	2	+1·15	29·3	+0·06	0·0
	Sant. 2. II, 406 ..	21·881	44·6	2	+ 12	21·89	29·73	44·6	2	+1·57	28·2	—0·02	+0·7
	Lam. 22747	22·102	51·3	2	— 120:	98	32·43	51·3	2	+1·2:	31·2	+0·10	—2·5
	Paris II	22·156	61·5	1	+ 60:	22·22	27·93	60·5	2	+0·20:	27·7	+0·37	+0·8
	„ III	21·690	79·7	1	+ 60:	21·75	28·13	79·7	1	+0·20:	27·9	—0·02	+0·2
	New Obs.	21·732	89·6			73	27·96	89·6			28·0	0·00	0·0
θ													
—0s·0021	Lal. H.C.	19 59 24·211	1794·6	1	+ ·085	24·30	— 6 53 49·41	1794·6	1	—2·14	51·5·	+0·31	+4·2
—0″·016	Pi. 19h. 389	23·676	1800:	9	+ 85	23·76	54·71	1800:	9	—2·14	56·8·	—0·23	—1·0
	Tayl. 9232	24·238	35:	2	— 97	24·14	56·38	35:	3	—0·42	56·8	+0·24	—0·3
	Lam. 22903	24·118	54·0	4	— 120:	00	58·94	54·0	4	+1·2:	57·7	+0·13	—0·9·
	Paris II	23·827	56·6	1	+ 60:	23·89	57·26	57·6	2	+0·24:	57·0	+0·03	—0·2
	Schj. 7788	23·844	62·7	1	+ 58	90	57·83	62·7	1	+0·09	57·7	+0·07	—0·8
	Paris III	23·805	75·6	2	+ 60:	86·	56·87	75·6	2	+0·24:	56·6	+0·05	+0·5
	Dubl. 773	23·732	85·6	1	0	73	58·91	85·6	1			—0·07	[—1·6]
	New Obs.	23·790	89·6			79	57·40	89·6			57·4	0·00	0·0
ι													
+0s·002	Lal. H.C.	20 0 44·535	1794·6	3	+ ·090	44·62·	— 4 44 0·18	1794·6	3	—1·96	2·1	—0·03·	+1·0
—0″·01	B. Z. 187	44·517	1823·7	1	— 48	47	5·65	1823·7	1	+1·11	4·5	—0·25	—1·2
	Lam. 23000	45·036	54·3	6	— 120:	92	6·01	53·2	7	+1·2:	4·8	+0·14	—1·1
	Paris II	44·868	57·6	2	+ 60:	93	3·95	58·1	2	+0·19:	3·8	+0·14	0·0
	Schj. 7805	44·731	62·7	1	+ 59	79	5·04	62·7	1	+0·09	4·9·	—0·01	—1·2
	Paris III	44·849	77·3	3	+ 60:	91	3·22	77·3	3	+0·19:	3·0	+0·08	+0·9
	New Obs.	44·850	89·6			85	4·03	89·6			4·0	0·00	0·0

Digitized by Google

Star's Designation and Assumed Proper Motion	Authority	R.A., 1889	Epoch	No. of Observations	Reduction to A.G.C.	Reduced R.A. for Epoch	Declination, 1889	Epoch	No. of Observations	Reduction to Mean Syst.	Reduced Dec. for Epoch	Outstanding Error	
		h m s			s	s	° ′ ″			″	″	s	″
ι′	Lam. 23001	20 0 46·773	1852·4	6	—0·120:	46·65	— 7 19 56·00	1852·4	6	+1·2:	54·8	—0·03	+0·7
	New Obs.	46·680	89·6			68	55·54	89·6			55·5	0·00	0·0
κ													
—0s·004	Lal. H.C.	20 1 3·724	1794·5	1	+ ·081	3·80	— 8 29 54·10	1794·5	1	—2·27	56·4	—0·26	+0·8
—0″·02	B. Z. 188	3·764	1823·7	2	— 48	72	60·07	1823·7	1	+1·20	58·9	—0·24	—1·1
	Sant. 2. IV, 395.	4·343	44·5	3	+ 12	4·35	58·41	44·5	3	+1·37	57·0	+0·48	+1·2
	Lam. 23015	3·809	53·0	7	— 120:	3·69	59·81	49·3	5	+1·2:	58·6	—0·14	—0·3
	Paris II	3·664	55·7	1	+ 60:	72	59·51	56·6	1	+0·17	59·3	—0·06	—0·9
	New Obs.	3·690	89·6			69	59·13	89·6			59·1	0·00	0·0
	Excluding Santini's R.A., the p. m. becomes —0s·001; err. + 0s·02 — 0s·04 [+ 0s·62] —0s·04 0s·00 0s·00.												
λ													
—0s·002	B. Z. 188	20 2 46·056	1823·7	1	— ·048	46·02	— 7 20 32·45	1823·7	1	+1·18	31·3	+0·08	+0·4
—0″·02	Rü 8003	45·722	41	1	+ 25	45·75	33·76	41	1	+0·58	33·2	—0·15	—1·2
	Lam. 23142	46·018	52·6	6	— 120:	90	32·95	52·6	6	+1·2:	31·7	+0·02	+0·5
	Quet. 8627	45·824	68·0	3	+ 38	86	32·66	66·9	3	—0·20	32·9	+0·02	—0·3
	New Obs.	45·803	89·6			80	32·97	89·6			33·0	0·00	0·0
μ													
+0s·0001	Lal. H.C.	20 5 9·180	1794·5	1	+ ·080	9·26	— 9 10 8·08	1794·5	2	—2·30	10·4	+0·35	+2·2
0″·000	Pi. 20h. 4	8·810	1800:	12	+ 80	8·89	10·18	1800:	12	—2·30	12·5	—0·02	+0·1
	B. Z. 102	8·752	22·6	1	— 48	70	19·76	22·6	1	+1·05	18·7	—0·11	—6·1
	Tayl. 9273	8·975	35:	2	— 100	87	11·90	35:	3	—0·39	12·3	—0·04	+0·3
	Rü. 8050	8·921	46	2	+ 27	95	13·33	46	2	+0·62	12·7	+0·03	—0·1
	Lam. 23302	8·876	56·2	6	— 120:	76	13·94	56·2	6	+1·2:	12·7	—0·16	—0·2
	Paris II	8·869	56·6	2	+ 60:	93	12·50	57·6	3	+0·18:	12·3	+0·01	+0·3
	Yarn. 8930	8·859	69·6	2	+ 50	91	11·68	70·8	5	+0·16	11·5	—0·01	+1·1
	New Obs.	8·924	89·5			92	12·58	89·5			12·6	0·00	0·0
C													
—0s·005	Lal. H.C.	20 14 31·817	1795·5	2	+ ·082	31·90	— 6 42 17·13	1795·5	2	—2·12	19·2	—0·08	+1·2
—0″·085	Lam. 23964	31·823	1853·0	4	— 120:	70	28·51	1853·0	4	+1·2:	27·3	0·00	—1·9
	Paris II.	31·817	58·7	1	+ 60:	88	25·65	58·7	1	+0·23:	25·4	+0·20	+0·4
	Quet. 8778	31·581	71·7	5	+ 38	62	26·59	65·9	4	—0·20	26·8	+0·01	—0·3
	Paris III.	31·555	74·7	1	+ 60:	61	27·59	74·7	1	+0·23:	27·4	+0·02	—0·2
	Dabl. 738	31·544	85·1	2	0	54	26·86	85·1	2			0·00	[+1·2]
	New Obs.	31·518	89·6			52	28·47	89·6			28·5	0·00	0·0
D	Lam. 24392	20 19 55·449	1852·1	3	— ·120:	55·33	— 3 9 32·09	1852·1	3	+1·2:	30·9	+0·25	+4·6
	New Obs.	55·078	89·6			08	35·51	89·6			35·5	0·00	0·0

Digitized by Google

SUMMARY OF FINAL

Star	Mag.	No. of Observations	No. of contr. Observatories	R.A., 1889	Epoch	Weight (Σp)	Proper Motion in R.A. and Weight		Precession in R.A., 1800	1850	1900
	m			h m s			s		s	s	s
A	5·8	442, 443	19	19 6 39·432	89·56	81·7	−0·0004	1187	3·2580	3·2565	3·2550
B	5·3	412, 411	19[1]	14 37·339	·56	81·7	+0·0059	949	3·1999	3·1984	3·1969
a	7·8	96	23	21 25·197	·52	39·2	−0·0006	152	3·2063	3·2046	3·2029
b	8·2	90, 96	23[2]	23 2·490	·53	34·5	−0·0012	114	3·2160	3·2142	3·2123
c	8·5	91	22	24 6·221	·54	35·2	−0·0036	60	3·1881	3·1864	3·1846
d	8·4	119, 118	22	25 17·926	·54	43·5	−0·0004	64	3·2045	3·2027	3·2009
e	8·3	121, 118	21	25 40·294	·56	44·2	−0·0038	79	3·1922	3·1905	3·1887
f	7·5	136, 134	22[3]	27 50·495	·55	43·5	−0·0012	198	3·1838	3·1820	3·1801
g	8·5	86, 89	22[4]	28 37·615	·55	33·6	+0·0010	51	3·1773	3·1755	3·1737
h	7·8	65, 63	22	29 20·728	·54	28·6	−0·0005	186	3·1741	3·1724	3·1705
i	7·7	86, 85	22[3]	30 41·133	·57	36·0	−0·003	11	3·1841	3·1823	3·1804
k	7·9	91, 92	22	30 53·379	·56	36·6	+0·0024	66	3·1738	3·1720	3·1701
l	8·0	63	21	31 22·120	·56	26·6	−0·001	16	3·1558	3·1540	3·1523
m	5·7	107, 112	22[5]	31 53·999	·55	42·2	+0·0036	819	3·1813	3·1794	3·1775
n	6·6	88, 89	21	34 26·886	·55	34·2	−0·0007	197	3·1985	3·1964	3·1944
o	7·6	68, 69	21	34 53·504	·53	27·4	+0·0012	56	3·1677	3·1658	3·1639
p	7·6	232, 234	23	35 56·005	·56	66·2	−0·0014	199	3·1731	3·1712	3·1692
q	8·4	145, 144	23	39 23·663	·54	47·9	−0·0010	198	3·1778	3·1758	3·1737
r	7·9	88, 86	23	40 59·489	·57	35·5	+0·0001	182	3·1592	3·1572	3·1552
s	7·9	73	22	41 53·287	·56	30·2	−0·0011	136	3·1928	3·1906	3·1884
t	7·9	234	23	43 4·464	·56	64·8	−0·0007	191	3·1768	3·1747	3·1725
u	8·0	75, 76	21[6]	43 43·818	·55	32·0	−0·0025	163	3·1775	3·1753	3·1731
v	6·7	92, 91	21	44 56·184	·55	38·1	−0·0002	307	3·1808	3·1786	3·1764
w	8·2	137	23	47 27·180	·54	49·7	−0·0032	53	3·1779	3·1757	3·1734
x	8·1	132, 131	23	48 22·381	·54	47·6	+0·0033	99	3·1878	3·1855	3·1831
y	8·1	121, 117	23[7]	51 25·870	·54	43·7	+0·0021	69	3·1798	3·1774	3·1750
z	8·5	116, 114	22	52 3·487	·56	41·2	−0·001	18	3·1902	3·1877	3·1852
α	8·0	61, 68	22[8]	52 18·111	·57	27·3	−0·0036	128	3·2147	3·2121	3·2094
β	8·0	60, 64	22[9]	52 38·021	·56	29·9	−0·0029	150	3·1727	3·1703	3·1679
γ	7·4	88, 89	23	54 57·314	·56	36·3	−0·0003	248	3·1714	3·1690	3·1666
δ	8·3	95, 96	22	55 39·739	·56	38·0	−0·0022	101	3·2144	3·2117	3·2090
ε	6·6	92	22[10]	56 17·662	·55	37·0	+0·0011	151	3·1853	3·1828	3·1803
ζ	8·0	74, 73	21[11]	57 4·779	·58	32·0	0·00	25	3·2417	3·2388	3·2358
η	8·1	81, 79	23	57 21·733	·56	35·4	−0·0041	129	3·1777	3·1752	3·1727
θ	8·4	89, 88	22[12]	59 23·791	·60	35·3	−0·0021	426	3·2179	3·2151	3·2122
ι	7·0	71, 68	22[13]	20 0 44·850	·57	29·7	+0·0021	196	3·1727	3·1702	3·1676
ι′	7·9	80, 83	18	0 46·683	·59	29·3	+0·001	41	3·2264	3·2235	3·2205
κ	7·5	70	22	1 3·687	·59	27·0	−0·0008	139	3·2506	3·2475	3·2444
λ	8·1	65, 64	9	2 45·803	·61	23·1	−0·0017	117	3·2259	3·2230	3·2200
μ	6·5	180, 179	23	5 8·923	·55	58·7	+0·0001	463	3·2629	3·2596	3·2562
C	6·4	304	18	14 31·519	·56	75·1	−0·0047	126	3·2090	3·2059	3·2027
D	6·1	301, 300	18	19 55·079	·56	74·1	−0·007	28	3·1376	3·1350	3·1324

[1] For Declination, 18, Bordeaux (single observation) excluded. [2] For Right Ascension, 22, Dublin (single observation) excluded. [3] For Right Ascension, 21, Bordeaux (3 observations) excluded. [4] For Right Ascension, 21, Bordeaux (4 observations) excluded. [5] For Right Ascension, 21, Bordeaux (3 observations) excluded. [6] For Right Ascension, 21, Pulkowa (6 observations) excluded. [7] Number of series 23, but Right Ascension 21 (no Right Ascension in Algiers series). [8] For Declination, 20, Hamburg (single observation) excluded. [9] For Declination, 20, Hamburg (single observation) excluded. [10] For Declination, 20, Hamburg (single observation) excluded. [11] For Declination, 20, Hamburg (single observation) excluded. [12] For Declination, 20, Hamburg (single observation) excluded. [13] For Declination, 20, Hamburg (single observation) excluded, Königsberg no Declination.

Digitized by Google

RESULTS (NORMALS N_4.)

Dec., 1889	Epoch	Weight (Σp)	Proper Motion in Dec. and Weight	Precession in Dec., 1800	1850	1900	$N_4 - N_3$	Star's Letter and Name
° ′ ″			″	″	″	″	s ″	
— 8 7 27·35	89·56	34·9	—0·005 ·882	+ 5·346	5·574	5·800	0·000 + 0·04	A=20 Aquilæ
5 37 20·48	·57	34·4	+0·043 891	6·022	6·243	6·463	— 1 + 6	B=26 Aquilæ
5 57 20·83	·51	20·6	—0·010 152	6·586	6·805	7·023	+ 2· + 1	a
6 24 0·59	·52	19·8	+0·003 114	6·719	6·938	7·156	+ 1 + 1	b
5 9 5·86	·53	19·4	+0·023 60	6·810	7·027	7·242	— 0· — 1	c
5 54 12·51	·55	22·6	—0·008 64	6·906	7·124	7·340	0 + 1	d
5 21 2·31	·56	22·5	—0·062 79	6·938	7·155	7·370	— 1 + 1	e
4 58 48·93	·55	21·8	+0·004 194	7·117	7·332	7·546	— 2 + 4	f
4 41 23·30	·55	19·4	+0·015 51	7·182	7·396	7·610	+ 1 0	g
4 33 5·43	·54	15·7·	—0·013 189	7·241	7·455	7·668	+ 2 — 3	h
5 1 2·44	·57	18·1	+0·01 11	7·349	7·563	7·776	— 2 0	i
4 32 43·43	·56	19·6	—0·024 66	7·367	7·580	7·792	+ 1· — 1	k
3 43 18·94	·57	15·4	—0·02 16	7·408	7·620	7·831	— 2 — 3	l
4 53 40·05	·56	22·6	—0·045 712	7·449	7·652	7·874	+ 0· — 1	m=42 Aquilæ
5 42 7·32	·55	19·4	0·000 193	7·653	7·866	8·079	+ 1 0	n
4 17 21·07	·54	16·4	+0·014 56	7·693	7·904	8·114	— 1· + 1	o
4 32 49·36	·55	30·2	+0·004 199	7·776	7·987	8·197	— 2 0	p
4 47 22·36	·53	25·6	+0·007 198	8·054	8·264	8·472	+ 1 0	q
3 56 0·53	·56	18·6	0·000 194	8·184	8·392	8·599	0 0	r
5 30 22·55	·56	17·2	+0·014 143	8·252	8·461	8·670	0 + 3	s
4 46 18·31	·55	31·0	—0·016 194	8·348	8·556	8·763	0 — 2	t
4 48 25·27	·55	17·5	—0·004 156	8·400	8·608	8·815	0 + 2	u
4 58 27·03	·54	19·9	—0·004 307	8·496	8·703	8·909	— 1 + 2	v
4 51 32·32	·54	24·9	+0·015 53	8·695	8·901	9·106	+ 1 + 2	w
5 19 59·87	·54	24·7	+0·011 99	8·766	8·973	9·178	+ 9 + 1	x
4 58 53·89	·54	22·5	—0·045 69	9·007	9·212	9·415	0 — 2	y
5 28 58·93	·56	21·5	+0·1 18	9·055	9·260	9·463	0 — 1	z
6 38 55·74	·56	15·8	—0·001 124	9·071	9·278	9·483	+ 3 — 2	α
4 39 16·25	·56	15·3·	+0·035 137	9·102	9·305	9·508	— 1 0	β
4 36 52·23	·55	19·6	—0·023 248	9·283	9·485	9·686	+ 12 — 3	γ
6 40 49·04	·56	20·1	+0·021 101	9·333	9·537	9·741	0 — 2	δ
5 17 48·64	·55	18·7·	—0·025 151	9·385	9·587	9·788	— 0· + 2	ε
8 0 14·30	·58	17·3	—0·1 25	9·439	9·645	9·849	+ 1 — 1	ζ
4 56 27·97	·56	17·6·	+0·017 129	9·468	9·670	9·870	+ 1 — 1	η
6 53 57·40	·57	19·1	—0·016 426	9·620	9·823	10·025	+ 1 0	θ
4 44 4·04	·57	15·5	—0·006 189	9·729	9·929	10·127	0 — 1	ι
7 19 55·49	·59	17·0	—0·02 41	9·725	9·928	10·130	+ 3 + 5	ι′
8 29 59·13	·58	15·5	—0·022 193	9·744	9·949	10·151	— 3 0	κ
7 20 33·07	·60	12·5	—0·020 117	9·877	10·079	10·279	0 — 10	λ
9 10 12·59	·54	27·8	0·000 463	10·054	10·257	10·458	— 1 — 1	μ
6 42 28·43	·57	31·8	—0·085 126	10·762	10·956	11·148	+ 0· + 4	C
— 3 9 35·50	·57	31·3	—0·12 28	+11·164	11·351	11·537	+ 1· + 1	D

observation) excluded. [3] For Declination, 21, observed for Right Ascension only in Washington series. [4] For [6] Number of series 22, but Bordeaux excluded for both co-ordinates (single observation). [7] For Declination, 22, Königsberg Pulkowa (6 observations) excluded for Right Ascension, and Königsberg (single observation) for Declination. [10] For excluded. [12] For Declination, 21, Washington (2 observations) excluded. [13] For Declination, 20, Melbourne

Digitized by Google

Of the final corrections to the normals N_3 given in the last column of the preceding table, the three largest are due to errors in the formation of the means N_3, which should have been, R.A., x $22^s{\cdot}380$, γ $57^s{\cdot}315$, Dec., λ $33''{\cdot}05$. The proper motions are given to one decimal place more here than in the table, pp. 604–611, for some of the stars, because they thus were communicated to Dr. Gill and used by him in the reduction of the Triangulation, with the following three exceptions: the proper motion in Declination for star c was set down $+0''{\cdot}016$ instead of $+0''{\cdot}023$ by error in the transcript sent to Dr. Gill, and that of star θ $-0''{\cdot}053$ as affected with an error in the comparisons which was corrected afterwards; and the proper motion in Right Ascension of star κ was communicated to him $+0^s{\cdot}0014$ as derived with a doubtful correction to Santini's Right Ascension which it afterwards was preferred altogether to reject.

The mean errors of the positions for mean epoch may be fairly estimated $=\sqrt{\frac{0{\cdot}01}{\Sigma p}}$ in seconds of time for Right Ascension, and $=\sqrt{\frac{0{\cdot}1}{\Sigma p}}$ in seconds of arc for Declination. For the comparison stars, therefore, these mean errors may be estimated generally between $\pm 0^s{\cdot}005$ and $\pm 0^s{\cdot}006$ in Right Ascension, and between $\pm 0''{\cdot}07$ and $\pm 0''{\cdot}08$ in Declination. The uncertainty of the proper motions generally remains large from the scantiness of the material for their determination. The meaning of the numbers given as weights for them is the same as in the case of the *Iris* stars, the "probable error" being, roughly approximate, $0^s{\cdot}01$ and $0''{\cdot}1$ divided by the square root of the weight.

Digitized by Google

DIVISION III.

OBSERVATIONS OF COMPARISON STARS FOR SAPPHO.

Individual Observations and Results of the Separate Series.

BERLIN.

With the Great Meridian-Circle, Dr. Küstner first determined the places of the four reference stars, referring them to the star ephemeris of the *Berliner Jahrbuch* and using "Pulkowaer Hauptsterne" only. From fourteen days' observations the following values were found and exclusively employed to determine, in first approximation, the places of the comparison stars :—

		h m s	° ′ ″
1889·0	A	0 31 32·0602	+ 10 49 32·318
	B	0 37 4·2961	+ 16 3 22·672
	C	1 17 2·1705	+ 10 47 13·204
	D	1 22 25·9723	+ 16 30 16·343

Day corrections then were determined by Dr. Küstner from comparison of all of the observed stars, except e′, with the means obtained in the first approximation. Thus the following corrections were found to the provisionally assumed places of the reference stars, and the places of the comparison stars given below, from which simple means were taken without regard to the four different positions of the instrument.

Corrections of Places of Reference Stars.

1889		Position of Instrument	A		B		C		D	
			Δα	Δδ	Δα	Δδ	Δα	Δδ	Δα	Δδ
			s	″	s	″	s	″	s	″
Aug.	30	IV	− 0·058	+ 0·41	+ 0·005	− 0·27	+ 0·033	− 0·04	− 0·026	+ 0·06
Sept.	1	IV	+ 3	+ 40	+ 10	+ 14	+ 9	− 25	+ 37	+ 38
	4	II	+ 3	− 80	− 3	− 10	+ 6	+ 58	− 12	+ 30
	18	III	+ 5	− 46	+ 19	+ 17	− 39	− 25	− 7	− 47
	23	I	+ 15	− 75	+ 46	− 45	+ 17	+ 15	− 3	+ 37
	24	I	+ 7	− 24	+ 13	− 6	+ 5	+ 24	− 8	+ 41
	30	I	+ 28	− 56	− 15	− 26	− 5	+ 26	− 43	+ 69

Digitized by Google

1889–90		Position of Instrument	A		B		C		D	
			$\Delta\alpha$	$\Delta\delta$	$\Delta\alpha$	$\Delta\delta$	$\Delta\alpha$	$\Delta\delta$	$\Delta\alpha$	$\Delta\delta$
			s	"	s	"	s	"	s	"
Oct.	3	II	+ 0·002	+ 0·15	+ 0·012	+ 0·09	— ·018	— 0·04	+ 0·002	— 0·03
	4	II	— 2	+ 12	+ 2	— 48	+ 23	+ 2	+ 21	+ 7
	6	III	— 1	— 25	— 13	— 31	+ 10	+ 26	— 18	+ 15
	12	I	+ 39	— 35	— 23	— 10	+ 17	+ 4	— 21	+ 13
	14	III	— 12	— 25	— 5	— 30	+ 20	+ 14	— 10	+ 65
	15	I	+ 33	+ 48	— 17	— 1	— 12	+ 30	+ 13	— 35
	26	IV	— 34	— 83	+ 19	— 9	+ 22	— 6	+ 8	— 17
	27	IV	— 22	+ 47	— 1	+ 5	— 16	+ 7	— 8	— 60
Nov.	1	IV	— 17	— 23	+ 12	+ 18	+ 11	+ 30	+ 11	— 1
	2	II	— 5	— 27	— 18	— 27	+ 5	+ 35	0	+ 12
	8	II	+ 5	— 19	— 14	— 31	+ 20	+ 25	— 3	+ 24
	9	II	— 11	— 11	— 35	— 25	+ 25	— 10	+ 21	+ 65
	10	II	+ 3	— 74	— 12	— 29	+ 5	+ 5	— 7	+ 63
	14	IV	+ 8	+ 81	+ 2	+ 28	— 32	— 1	+ 13	— 32
	15	II	+ 2	+ 8	— 17	— 40	— 37	+ 59	+ 6	+ 32
	21	IV	— 15	0	+ 9	— 51	+ 14	+ 47	— 16	— 15
	22	IV	— 58	+ 25	+ 3	+ 43	+ 20	— 3	— 10	+ 3
	23	III	— 7	— 41	+ 35	+ 15	— 17	+ 40	+ 10	— 5
	24	III	— 15	— 41	+ 11	— 7	+ 22	+ 1	— 29	— 7
	26	I	+ 46	— 17	0	— 5	+ 20	+ 32	— 21	+ 12
Dec.	20	I	— 7	— 4	+ 29	— 12	— 19	— 8	— 16	— 9
	21	III	— 1	— 31	+ 32	— 15	— 19	— 25	— 20	— 50
	28	I	+ 18	— 20	+ 8	— 34	+ 19	+ 22	— 16	+ 44
	29	I	— 6	— 44	+ 5	— 20	0	+ 52	+ 8	+ 40
Jan.	1	III	+ 1	— 28	— 15	+ 63	+ 29	— 17	+ 1	+ 31
	3	II	+ 3	+ 4	+ 27	— 13	+ 4	+ 21	— 5	+ 51
	5	IV	+ 9	— 20	+ 24	— 23	— 18	+ 50	— 27	0
	11	III	+ 12	— 45	+ 15	+ 2	+ 15	+ 13	— 21	+ 20
Mean ...			—0·0008	— 0·164	+0·0043	—0·103	+0·0040	+0·146	—0·0056	+0·125

Observations of Comparison Stars.

1889	Pos. of Instr.	R.A.	Dec.	1889–90	Pos. of Instr.	R.A.	Dec.	1889–90	Pos. of Instr.	R.A.	Dec.
a		s	"	b		s	"	c		s	"
Aug. 30	IV	25·244	56·89	Sept. 1	IV	31·061	11·36	Oct. 3	II	24·366	35·69
Sept. 4	II	·233	56·80	30	I	·087	10·78	15	I	·321	35·22
18	III	·241	56·66	Oct. 4	II	·071	11·38	Nov. 21	IV	·362	35·62*
23	I	·274	57·48	6	III	·097	10·39	24	III	·373	35·30*
24	I	·245	56·94	Nov. 10	II	·055	11·40	Dec. 28	I	·289	35·64
Oct. 14	III	·282	56·89	Dec. 21	III	·044	11·04	Jan. 3	II	·350	35·28
Nov. 8	II	·220	56·86	Jan. 5	IV	·073	11·34	11	III	·377	35·17*
22	IV	·239	56·91								

Digitized by Google

1889–90	Pos. of Instr.	R.A.	Dec.
d		s	″
Aug. 30	IV	46·679	24·56
Oct. 12	I	·714	25·12
14	III	·735	24·33
Nov. 8	II	·701	25·04
Dec. 29	I	·717	24·67
Jan. 1	III	·690	24·68
e			
Sept. 18	III	46·160	52·02
Oct. 4	II	·156	52·54
Nov. 9	II	·182	52·43
14	IV	·189	52·07
15	II	·187	52·39
22	IV	·152	51·77
26	I	·138	52·39
Dec. 20	I	·184	52·04
21	III	·194	52·10
Jan. 5	IV	·179	51·82
e′			
Sept. 4	II	20·400	52·82
23	I	·361	53·04
Oct. 6	III	·422	52·18
f			
Sept. 1	IV	40·043	43·69
24	I	·038	43·92
Nov. 10	II	·091	44·01
24	III	·052	44·22
Jan. 11	III	·070	44·01
g			
Oct. 15	I	0·678	5·47
Nov. 8	II	·686	4·93
21	IV	·669	4·73
23	III	·674	4·75
h		s	″
Aug. 30	IV	2·961	12·13
Sept. 30	I	·971	12·08
Oct. 3	II	·921	12·47
14	III	·934	12·01
Nov. 1	IV	·917	12·21
2	II	·968	12·51
15	II	·951	11·86
Dec. 21	III	·924	12·27
28	I	·925	12·04*
i			
Sept. 18	III	11·972	45·30
Oct. 4	II	·955	44·75
12	I	·955	44·59
27	IV	12·000	44·95*
Nov. 9	II	11·965	44·80
22	IV	·982	44·84
k			
Sept. 4	II	19·692	1·95
23	I	·671	1·61
24	I	·701	1·71
Oct. 6	III	·706	2·44
Nov. 14	IV	·747	1·21*
l			
Sept. 1	IV	40·350	43·28
Nov. 15	II	·401	43·16*
26	I	·358	43·78*
Dec. 21	III	·413	44·21*
m			
Oct. 26	IV	52·278	30·18
Nov. 24	III	·304	29·80
Dec. 29	I	·350	29·44
Jan. 3	II	·307	30·28
n		s	″
Aug. 30	IV	59·188	54·07
Nov. 8	II	·215	53·42
10	II	·204	53·44
23	III	·191	53·67
Dec. 28	I	·218	53·73
Jan. 11	III	·204	53·85
o			
Sept. 30	I	32·945	45·97
Oct. 3	II	·893	45·88
27	IV	·914	46·10
Nov. 2	II	·930	45·99
21	IV	·902	46·02
Jan. 1	III	·931	45·70
p			
Sept. 18	III	5·027	44·58
Oct. 4	II	4·969	44·27
Nov. 1	IV	5·000	44·09
9	II	4·994	44·55
14	IV	5·026	44·51
15	II	4·998	44·38
22	IV	5·045	44·54
26	I	4·975	43·74
Dec. 20	I	5·017	44·42
21	III	4·993	44·53
Jan. 5	IV	5·011	44·43
q			
Aug. 30	IV	53·755	37·88
Sept. 4	II	·757	37·89
23	I	·747	38·21
Oct. 6	III	·750	37·47
15	I	·720	37·84
r			
Sept. 1	IV	25·580	58·64
Oct. 4	II	·569	58·74
14	III	·558	59·10
Nov. 15	II	·626	58·50*
22	IV	·621	58·58
Dec. 20	I	·612	59·13
21	III	·611	58·66*

Digitized by Google

1889–90	Pos. of Instr.	R.A.	Dec.
		s	″
s			
Sept. 18	III	32·908	51·63
24	I	·878	50·82
Oct. 3	II	·906	50·67
26	IV	·890	51·16
Nov. 2	II	·895	50·81
14	IV	·877	51·21*
24	III	·863	51·08
Dec. 29	I	·864	50·90
t			
Aug. 30	IV	43·509	16·91
Sept. 30	I	·523	17·77
Oct. 27	IV	·516	17·84
Nov. 1	IV	·493	18·02
9	II	·517	17·66
23	III	·505	17·59
26	I	·554	17·79
Jan. 3	II	·491	17·80
u			
Oct. 15	I	9·635	26·65
Nov. 10	II	·641	27·03
21	IV	·676	26·38
Dec. 21	III	·655	27·30
Jan. 11	III	·634	27·59
v			
Oct. 12	I	16·318	9·93
Nov. 14	IV	·361	10·26
15	II	·387	10·38
Dec. 28	I	·403	10·08
Jan. 1	III	·370	9·83
5	IV	·365	10·12
w			
Sept. 4	II	0·535	26·96
18	III	·549	26·89
23	I	·523	27·03
Nov. 22	IV	·555	26·82
x			
Aug. 30	IV	13·802	56·15
Sept. 24	I	·767	55·95
Oct. 14	III	·758	56·09
26	IV	·752	56·49
Nov. 2	II	·751	56·32
Dec. 20	I	·757	56·35
21	III	·773	56·46
Jan. 3	II	·764	56·05
y*			
Sept. 1	IV	56·989	15·25*
Oct. 15	I	·998	14·95
Nov. 15	II	·997	15·36
24	III	57·002	15·67
Dec. 29	I	·009	15·41*
y			
Nov. 1	IV	4·368	23·12
9	II	·374	23·40
14	IV	·371	23·13
23	III	·341	23·16
26	I	·372	23·44
z			
Sept. 18	III	29·603	9·95
Oct. 27	IV	·624	9·67
Nov. 10	II	·600	9·60
22	IV	·616	9·61
Dec. 28	I	·593	9·64
α			
Oct. 4	II	59·515	14·62
6	III	·525	15·14
12	I	·573	15·16
14	III	·507	14·69
15	I	·551	15·45
Nov. 15	II	·536	14·95
21	IV	·502	15·45
Jan. 5	IV	·510	15·15
β			
Sept. 4	II	2·141	10·44
23	I	·112	10·73
Nov. 14	IV	·101	10·34
Dec. 21	III	·113	10·74
Jan. 11	III	·140	10·47
γ			
Aug. 30	IV	34·884	41·42
Sept. 1	IV	·880	40·86
18	III	·882	40·82
Nov. 2	II	·877	40·53*
9	II	·861	40·56
22	IV	·879	40·63
Dec. 20	I	·882	40·61*
29	I	·845	40·93
Jan. 1	III	·871	40·54
δ			
Sept. 24	I	18·291	58·64
Oct. 3	II	·309	58·39
14	III	·303	58·51
26	IV	·290	59·18
Jan. 3	II	·312	57·95
ε			
Oct. 15	I	3·821	5·78
Nov. 1	IV	·817	5·43
10	II	·843	6·13
24	III	·803	5·61
Jan. 11	III	·767	5·69
ζ			
Oct. 4	II	10·229	12·04
27	IV	·246	11·60
Nov. 14	IV	·211	12·06
15	II	·193	12·13
22	IV	·236	12·14
23	III	·228	12·08
26	I	·195	11·61
Dec. 20	I	·206	11·97
21	III	·194	12·29

Digitized by Google

1889–90	Pos. of Instr.	R.A.	Dec.	1889–90	Pos. of Instr.	R.A.	Dec.	1889–90	Pos. of Instr.	R.A.	Dec.
η		s	″	ι		s	″	λ		s	′
Aug. 30	IV	24·053	5·03	Aug. 30	IV	13·846	44·44	Sept. 23	I	34·285	7·08
Sept. 18	III	·026	5·10	Sept. 24	I	·845	44·98	Oct. 3	II	·324	7·09
Oct. 12	I	·057	4·76	Oct. 3	II	·845	44·73	6	III	·333	7·64
Nov. 2	II	·059	4·99	4	II	·826	44·80	15	I	·365	7·13
9	II	·024	4·50	14	III	·820	44·47	26	IV	·364	7·51
21	IV	·046	5·54	15	I	·806	44·38	Nov. 2	II	·306	7·49
Dec. 28	I	·026	4·83	26	IV	·831	44·46	15	II	·320	6·97
Jan. 1	III	·039	5·17	Nov. 15	II	·816	44·70	21	IV	·349	7·25
				22	IV	·805	44·48	24	III	·350	7·65
				Dec. 21	III	·816	44·68	Dec. 21	III	·360	6·98
								29	I	·314	7·38
								Jan. 5	IV	·336	7·34
θ				κ				μ			
Sept. 1	IV	55·764	28·79	Oct. 4	II	15·789	52·93	Sept. 18	III	26·056	31·36
4	II	·755	29·18	12	I	·772	53·44	24	I	·040	31·25
30	I	·736	29·28	14	III	·778	53·26	30	I	·018	31·35
Oct. 6	III	·735	29·36	Nov. 1	IV	·807	52·97	Oct. 4	II	·103	31·64
Dec. 29	I	·751	29·19	9	II	·820	52·90	14	III	·073	32·05
Jan. 5	IV	·774	28·90	14	IV	·778	52·96	27	IV	·025	31·40
				23	III	·800	53·09	Nov. 10	II	·018	31·55
				26	I	·801	52·97	14	IV	·011	31·08
				Dec. 20	I	·780	53·04	22	IV	·028	31·61
				Jan. 3	II	·769	52·76	Jan. 11	III	·023	31·23

For the Declinations marked with an asterisk only two microscopes were read. No account however was taken of the small diminution of accuracy which might have thus arisen, and from other circumstances mentioned in special notes appended to some of the observations.

The star e′ is a known double star (Σ 67), and was withdrawn from the list after this had been noticed. Dr. Küstner's observations refer to the middle point between the components, which the observer estimated $8^{m}\cdot3$ and 9^{m}; distance, $1''\cdot8$; position angle, 0°. Further, Dr. Küstner noticed duplicity of star s, which he estimated, $8^{m}\cdot2$ and $9^{m}\cdot3$, $0''\cdot9$, 175°; in this case he tried to observe the centre of gravity of the combined mass of light, because this would probably be the exact spot pointed at in the heliometer measurements.

Digitized by Google

Mean Results.

Star	R.A. 1889·0	Corr.	Dec. 1889·0	No. obs.	Star	R.A. 1889·0	Corr.	Dec. 1889·0	No. obs.
	h m s	s	° ′ ″			h m s	s	° ′ ″	
A	0 31 32·059	—0·011	+ 10 49 32·15	35	u	0 57 9·648	—0·022	+15 32 26·99	5
B	37 4·300	— 11	16 3 22·57	35	v	57 16·367	— 16	12 27 10·10	6
a	42 25·247	— 15	8 36 56·90	8	w	58 0·540	— 24	13 20 26·92	4
b	42 31·070	— 27	9 39 11·10	7	x	59 13·765	— 3	14 20 56·23	8
c	44 24·348	— 23	11 13 35·42	7	y*	59 56·999	— 27	14 23 15·33	5
d	44 46·706	— 22	9 48 24·73	6	y	1 0 4·365	— 15	14 47 23·25	5
e	45 46·172	— 9	12 10 52·16	10	z	0 29·607	— 22	15 43 9·69	5
e′	46 20·394	— 20	9 59 52·68	3	α	1 59·527	— 18	15 16 15·08	8
f	46 40·059	— 11	13 2 43·97	5	β	2 2·121	— 18	16 49 10·54	5
g	47 0·677	— 20	9 12 4·97	4	γ	2 34·873	— 23	17 3 40·77	9
h	48 2·941	— 21	10 31 12·18	9	δ	4 18·301	— 5	15 4 58·53	5
i	49 11·971	— 19	12 14 44·87	6	ε	5 3·810	— 25	17 48 5·73	5
k	50 19·703	— 6	13 21 1·78	5	ζ	5 10·215	— 22	16 11 11·99	9
l	50 40·380	— 25	12 6 43·61	4	η	5 24·041	— 20	14 6 4·99	8
m	50 52·310	— 24	14 10 29·92	4	θ	6 55·753	— 22	16 10 29·12	6
n	50 59·203	— 24	9 24 53·70	6	ι	8 13·826	— 3	15 32 44·61	10
o	51 32·919	— 19	11 49 45·94	6	κ	10 15·789	— 20	17 2 53·03	10
p	52 5·005	— 3	13 5 44·37	11	λ	11 34·334	— 25	15 46 7·29	12
q	53 53·746	— 22	14 0 37·86	5	μ	12 26·040	— 18	17 59 31·45	10
r	55 25·597	— 19	10 34 58·76	7	C	17 2·175	— 9	10 47 13·35	35
s	55 32·885	— 18	11 18 51·04	8	D	22 25·967	— 11	16 30 16·47	35
t	56 43·514	— 22	13 39 17·67	8					

The column headed "Corr." gives the corrections required by the Right Ascensions for magnitude equation, taken from the table given with the observations of the *Iris* stars. The *B.D.* magnitude was used as argument, except for stars x and ι, for both of which, instead of 5·5 and 6·5 respectively, the magnitude 6·0 was assumed, given in the Bradley catalogue as mean from the most reliable estimates.

A new determination of the day corrections was made with these mean places. The resulting corrections of the values previously used never exceeded $0^s·001$ and $0''·02$, and were applied to the observations of the planet only, while for the stars the results tabulated above were retained as definitive.

The mean error of one observation was found by Dr. Küstner in the first approximation: in R.A. $\pm 0^s·024$, in Dec. $\pm 0''·33$. After the application of the day corrections these values became reduced to $\pm 0^s·021$ and $\pm 0''·30$.

Digitized by Google

BORDEAUX.

Observations were made on four days only, which gave the following mean places 1889·0, communicated by M. Rayet—

1889	A		B		C		D	
	$0^h\ 31^m$	$+\ 10°\ 49'$	$0^h\ 37^m$	$+\ 16°\ 3'$	$1^h\ 17^m$	$+\ 10°\ 47'$	$1^h\ 22^m$	$+\ 16°\ 30'$
	s	"	s	"	s	"	s	"
Oct. 23	32·00	32·1	4·14	23·4	2·07	13·9	25·88	16·9
24	32·02	32·1	4·35	22·5	2·11	13·5	25·93	[12·6]
29	31·92	33·0	4·24	23·0	2·07	13·7	...	...
Nov. 6	31·98	33·8	4·27	24·7	2·12	14·3	25·91	17·6
Mean ...	31·980	32·75	4·250	23·40	2·092	13·85	25·907	17·25

Star	1889	R.A.	Dec.	Star	1889	R.A.	Dec.	Star	1889	R.A.	Dec.
		s	"			s	"			s	"
a	Oct. 23	25·14	57·5	n	Oct. 23	59·08	0·0	γ	Oct. 23	34·84	40·5
	29	25·16	57·6	q	Nov. 6	53·59	41·0	δ	Oct. 29	18·32	59·7
b	Oct. 24	31·00	9·9	r	Oct. 24	25·62	1·3	θ	Nov. 6	55·69	30·1
c	Nov. 6	24·27	37·4		29	25·67	59·7	ι	Oct. 24	13·80	46·2
g	Oct. 29	0·76	4·9	v	Nov. 6	16·41	11·5		29	13·83	45·3
h	Oct. 24	2·90	13·4	x	Oct. 29	13·79	56·7	κ	Oct. 23	15·84	53·4
i	Nov. 6	11·88	46·8	a	Oct. 24	59·51	16·4	λ	Oct. 29	34·35	8·0
m	Oct. 29	52·38	30·9		Nov. 6	59·44	16·4	μ	Nov. 6	26·08	32·6

The few stars observed more than once give the following day corrections :—

		s	"	
October	23	$\Delta\alpha = +$ 0·03	$\Delta\delta +$ 0·2	5 st.
	24	$-$ 0·03	$+$ 0·3	6, 5 „
	29	$+$ 0·01	$+$ 0·2	5 „
November	6	0·00	$-$ 0·6	5 „

which were applied to the observed places. The remaining differences with the corrected means make the mean error of an observation in R.A. $\pm$ $0^s·058$, in Dec. $\pm$ $0''·63$, from 21 and 20 obs. respectively; the Declination of D, observed October 24, was excluded. Its discordance was noted at Bordeaux, but the nature of the error could not be made out.

Digitized by Google

CAMBRIDGE (ENG.).

The results of the individual observations made and communicated by Mr. A. Graham were published afterwards in the *Monthly Notices*, Vol. LI., March 1891. The observations of the reference stars give the following means :—

	h	m	s		°	′	″	
A	0	31	32·027	+	10	49	31·87	16 obs.
B	0	37	4·282		16	3	23·21	16 „
C	1	17	2·193		10	47	12·94	14 „
D	1	22	25·994		16	30	16·05	14 „

With these places the following day corrections were obtained :—

		s	″		s	″
September 16	$\Delta\alpha = -$	0·037	$\Delta\delta = -$ 1·16	October 9	$\Delta\alpha = -$ 0·012	$\Delta\delta = +$ 0·06
17	+	37	+ 0·92	10	− 40	+ 0·25
18	+	124	− 0·64	12	− 6	− 0·02
20	−	57	+ 0·05	14	− 72	− 1·13
25	−	10	+ 0·20	21	+ 4	+ 0·40
October 3	+	54	− 0·27	24	− 53	+ 1·41
7	+	52	+ 0·26	25	+ 80	+ 0·44
8	+	35	− 0·09	31	− 98	− 0·51

These corrections were adopted, except for the days October 12 and 21, when they depend only on the two stars **A** and **B**. For these days and September 10, on which day none of the reference stars were observed, the following corrections, derived from all stars, were used :—

		s	″	
September 10	$\Delta\alpha = +$	0·058	$\Delta\delta = +$ 0·20	from 8 st.
October 12	+	0·009	− 0·04	8 „
21	+	0·004	+ 0·43	4 „

An isolated observation of September 11, not sensibly differing from the mean of the other observations of the same star (a), was retained unchanged.

The adopted mean results are contained in the following table :—

Star	R.A. 1889·0	Dec. 1889·0	No. obs.	Star	R.A. 1889·0	Dec. 1889·0	No. obs.	Star	R.A. 1889·0	Dec. 1889·0	No. obs.
	h m s	° ′ ″			h m s	° ′ ″			h m s	° ′ ″	
A	0 31 32·028	+10 49 31·89	16	**m**	0 50 52·321	+14 10 30·28	2	α	1 1 59·490	+15 16 14·94	6
B	37 4·283	16 3 23·23	16	**n**	50 59·212	9 24 54·96	3	β	2 2·233	16 49 10·59	3
a	42 25·237	8 36 57·12	4	**o**	51 32·910	11 49 46·20	3	γ	2 34·934	17 3 40·44	4
b	42 31·152	9 39 10·50	2	**p**	52 5·074	13 5 44·56	4	δ	4 18·320	15 4 59·08	4
c	44 24·431	11 13 35·56	3	**q**	53 53·816	14 0 38·54	3	ϵ	5 3·887	17 48 5·86	3
d	44 46·706	9 48 24·54	6	**r**	55 25·616	10 34 58·98	2	ζ	5 10·300	16 11 11·85	3
e	45 46·140	12 10 52·59	3	**s**	55 32·834	11 18 50·39	4	η	5 24·077	14 6 5·74	3
e′	46 20·460	9 59 53·12	2	**t**	56 43·533	13 39 18·40	4	θ	6 55·853	16 10 28·79	3
f	46 40·079	13 2 44·58	3	**u**	57 9·707	15 32 26·75	3	ι	8 13·789	15 32 45·24	7
g	47 0·661	9 12 4·25	3	**v**	57 16·384	12 27 10·44	2	κ	10 15·840	17 2 53·02	6
h	48 2·906	10 31 12·19	5	**w**	58 0·644	13 20 27·04	2	λ	11 34·461	15 46 7·79	5
i	49 12·008	12 14 44·77	4	**x**	59 13·802	14 20 55·97	6	μ	12 26·092	17 59 31·46	8
k	50 19·764	13 21 2·37	3	**y***	59 57·080	14 23 16·16	5	**C**	17 2·193	10 47 12·92	14
l	50 40·532	12 6 44·86	2	**z**	1 0 29·629	15 43 9·94	2	**D**	22 25·994	16 30 16·06	14

Digitized by Google

The mean error of a reduced observation is found—

from 60 obs. of the 4 reference stars :	in R.A.	$\pm$ 0^s·065 ;	in Dec.	$\pm$ 0′·61
„ 140 „ „ 38 comparison „	„	0·076	„	0·66

There is scarcely reason, however, in this case to distinguish the reference stars from the comparison stars; at least so far as magnitude is concerned no sensible difference of accuracy can be expected in the observations, the reference stars for the *Sappho* comparison stars being considerably fainter and nearer to the mean brightness of the latter than in the *Victoria* list.

Among the comparison stars four are considerably brighter than the reference stars, and three of equal brightness with them. Taking these seven stars and the reference stars together the mean error would be—

from 90 obs. of 11 stars	6^m·0 to 7^m·3 :	in R.A.	$\pm$ 0^s·070 ;	in Dec. $\pm$ 0′·60
„ 110 „ 31 „	7·7 „ 9·0	„	$\pm$ 0·076	„ $\pm$ 0·68

The difference cannot be relied upon; the day corrections generally determined from only four stars are subject to considerable accidental error, and the harmony between the observations of the comparison stars might be improved by a new determination from all stars. It is sufficient, therefore, to assume the same mean value of mean error for all observations, viz.: in R.A. $\pm 0^s{\cdot}073$; in Dec. $\pm 0''{\cdot}64$.

CAMBRIDGE (MASS.).

Observations were made with the Transit-Circle by the same observer and in the same manner as explained for the *Victoria* stars. The only change in the apparatus consisted in the substitution for the glass plate on which were ruled the lines for the observation of transits, of a similar plate with coarser lines. This change markedly improved the accordance of the observations in R.A., although there still was found less accordance between the observations of stars fainter than 8·2 mag.; grouping the stars, Mr. Searle found the following probable errors of one complete observation in R.A.:—

from 5 stars,	mean mag.	6·2	$\pm$ 0^s·044
„ 8 „		7·8	0·040
„ 12 „	„	8·1	0·033
„ 6 „	„	8·3	0·053
„ 9 „		8·4	0·056
„ 4 „	„	8·6	0·050

Without regard to the magnitudes the probable error was found from all stars $\pm$ 0^s·045, and in Dec. $\pm$ 0″·65.

Digitized by Google

The observations of the *Sappho* stars were made in the course of the observations of the Zone, $-10°$ to $-14°$, but some neighbouring fundamental stars of the *Berliner Jahrbuch* were observed with them and used to determine the clock-error and the equator-point. The clock-error was assumed constant for each evening; the daily rate of the clock was losing, but it was considered very doubtful whether this rate was maintained in the evening hours, while the material collected did not show the existence of any evening rate distinctly enough to make it worth while to adopt one.

The following are the individual results communicated by Prof. Pickering of the observations of the comparison stars and some other stars in the zone observed with them, which are here retained because they contribute to the determination of day corrections. The reference stars were not observed.

1889	R.A.	Dec.	1889	R.A.	Dec.	1889	R.A.	Dec.	1889	R.A.	Dec.	1889	R.A.	Dec.
a	s	″	h	s		p	s	″	w	s	″	ζ	s	″
Nov. 16	25·41	55·6	Oct. 18	3·09	11·2	Oct 18	5·00	41·4	Nov. 5	0·80	24·4	Nov. 5	10·32	11·6
30	·41	57·8	23	·04	11·9	23	·03	42·9	6	·71	24·2	6	·38	9·8
			Dec. 9	·09	10·0	Dec. 16	·04	43·5				30	·37	12·1
b			i						x					
Dec. 9	31·20	9·9				q			Oct. 16	13·72	55·5	η		
12	·22	9·7	Oct. 16	12·05	42·6				18	·79	56·7	Nov. 14	24·18	2·7
			21	·14	41·3	Oct. 16	53·68	35·6	Nov. 5	·77	54·5	29	·15	4·4
d			Dec. 12	·06	40·3	18	·92	35·5	Dec. 9	·82	56·0	Dec. 9	·17	3·6
Nov. 6	46·82	21·2	k			Dec. 9	·87	37·4	y*					
29	·87	23·7	Nov. 5	19·70	0·6	r			Nov. 6	57·21	12·3	θ		
			6	·76	59·8				Dec 13	·08	14·6	Oct. 21	55·93	28·9
e			Dec. 9	·79	0·7	Oct. 18	25·87	55·9	19	·21	15·6	23	·89	29·2
Nov. 16	46·15	51·2				21	·71	58·7				Nov. 5	·88	27·3
19	·32	51·8	l			Nov. 30	·73	57·7	α					
			Nov. 16	40·69	42·8				Oct. 18	59·82	14·2	κ		
e′			18	·51	42·9	s			21	·71	15·6	Oct. 21	15·95	52·3
Oct. 23	20·46	51·0				Oct. 16	32·97	48·2				23	·85	51·5
Nov. 5	·45	50·5	m			23	·86	48·6	β			Dec. 9	·90	52·4
			Nov. 29	52·48	28·5	Nov. 18	33·09	48·6	Oct. 23	2·26	9·7			
f			30	·37	27·7	Dec. 9	·07	49·6	Nov. 5	·25	10·0	λ		
Nov. 6	40·18	40·8	Dec. 13	·43	27·2							Nov. 5	34·55	6·1
16	·23	41·5	n						γ			14	·45	7·0
Dec. 13	·14	41·9	Oct 16	59·28	55·2	t			Nov. 6	35·09	38·4	30	·48	6·8
			21	·37	54·3	Nov. 6	43·74	14·8	29	·00	40·4			
g			Dec. 12	·34	54·5							μ		
Oct. 16	0·77	3·9							ε			Oct. 21	26·02	31·2
Nov. 30	·90	2·1	o			v			Oct. 21	4·10	4·1	23	·18	31·4
Dec. 16	·65	4·6	Nov. 5	33·20	43·3	Dec. 9	16·55	7·9	23	3·95	5·0	Nov. 6	·25	27·9
			Dec. 9	·03	44·7	12	·52	7·5	Dec. 16	·83	4·7	Dec. 9	·21	30·6

Digitized by Google

Observations of Additional Stars.

Star	Mag.	1889	R.A. 1889·0	Dec. 1889·0	Star	Mag.	1889	R.A. 1889·0	Dec. 1889·0
°			h m s	° ′ ″	°			h m s	° ′ ″
8 101	8·3	Oct. 16	0 37 16·44	+ 8 24 29·0	9 96	8·8	Nov. 5	0 44 34·11	+ 9 15 28·8
		21	16·55	29·9			16	34·11	28·9
		Dec. 9	16·49	31·6	8 117	8·4	Nov. 30	0 45 16·33	+ 8 37 28·3
9 81	8·4	Nov. 16	0 37 51·96	+ 9 28 18·6			Dec. 9	16·13	27·5
		30	51·84	16·0	6 115	8·0	Dec. 12	0 45 19·07	+ 6 17 40·9
		Dec. 12	51·90	18·9			13	19·11	40·6
6 97	8·2	Oct. 16	0 38 59·56	+ 7 0 38·6	7 124	8·4	Nov. 18	0 46 46·61	+ 8 3 44·8
		21	59·56	41·0			29	46·62	41·0
		Dec. 9	59·57	40·8			Dec. 9	46·63	41·7
7 104	7·7	Nov. 14	0 39 55·73	+ 7 14 13·0	6 119	8·3	Oct. 18	0 46 58·27	+ 7 5 54·8
		16	55·82	13·8			21	58·30	55·6
		30	55·80	13·9			Dec. 12	58·16	56·2
7 107	8·2	Oct. 16	0 41 28·32	+ 8 2 17·0	11 142	8·0	Oct. 21	0 59 44·24	+11 52 29·1
		21	28·43	17·3			23	44·18	28·5
6 107	4·3	Dec. 13	0 42 55·41	+ 6 58 49·3					
		16	55·44	49·9					
		19	55·52	49·3					

The magnitudes here given for the additional stars are the means of the estimates made at the observation, which, on the average, made the stars one-third of a magnitude brighter than *B.D.*

As the accidental error of the Cambridge observations is large, and almost all of the stars are observed only two or three times, it seemed not safe to rely upon the small stars alone in determining the day corrections, and the observations of the *Jahrbuch* stars were employed for the same purpose. Mr. Searle had drawn up a table exhibiting the differences of the observed positions of these stars, deduced from the series in the same manner as those of the *Sappho* stars, from the *Jahrbuch* places, the means of which are the following :—

	s	″			s	″	
ϕ Pegasi	+ 0·024	+ 0·05	8 obs.	ϵ Piscium	+ 0·004	− 0·78	9 obs.
ω Piscium	+ 0·012	− 0·09	9 „	η Piscium	− 0·016	+ 0·13	11 „
γ Pegasi	− 0·043	+ 0·13	10 „	o Piscium	+ 0·037	+ 0·63	9 „
δ Piscium	+ 0·015	− 0·98	6 „				

Comparing the individual differences with these means, and the observations of the other stars with the means of the above separate results, the day corrections were found as follows :—

1889	From fundamental stars			From small stars			Adopted		1889	From fundamental stars			From small stars			Adopted	
		s	″		s	″					s	″		s	″		
Oct. 16	+0·010	−0·40	3	+0·060	+0·21	7	+0·038	+0·58	Nov. 18	+0·007	+0·18	4	+0·003	−0·70	3	+0·006	−0·20
18	− 2	−0·11	5	− 43	+0·50	7	−0·026	+0·26	29	+ 3	+0·20	3	− 4	−0·44	5	−0·001	−0·20
21	+ 6	−0·29	5	− 20	−0·29	13	−0·013	−0·29	30	+ 8	−0·70	4	− 10	+0·01	9	−0·005	−0·21
23	− 2	−0·07	5	+ 24	−0·25	10	+0·015	−0·19	Dec. 9	− 8	+0·21	4	− 7	−0·29	15	−0·007	−0·19
Nov. 5	+ 15	+0·19	4	− 4	+0·30	10	+0·001	+0·25	12	− 10	+0·04	4	+ 17	−0·03	7	+0·007	0·00
6	+ 12	+0·38	4	− 18	+1·10	8	−0·007	+0·86	13	− 5	+0·01	4	+ 32	0·00	5	+0·016	+0·01
14	+ 10	−0·02	4	+ 27	+0·33	3	+0·017	+0·13	16	0	−0·04	5	+ 66	−0·42	5	+0·033	−0·23
16	+ 7	+0·63	3	− 40	−0·02	6	−0·024	+0·20	19	+ 2	+0·16	4	− 63	−0·50	3	−0·026	−0·12

Digitized by Google

With regard to the large apparent corrections for the Declinations of δ, ε and o Piscium in Dec. 6° 59′, 7° 18′, and 8° 36′ resp., Mr. Searle remarks that these are probably due to a badly tarnished part of the limb being opposite one of the microscopes, making the reading very difficult, and that thereby also the declinations of the other stars observed about these declinations may have been impaired.

The means of the reduced observations of the *Sappho* stars become the following :—

Star	R.A. 1889·0	Dec. 1889·0	No. obs.	Star	R.A. 1889·0	Dec. 1889·0	No. obs.	Star	R.A. 1889·0	Dec. 1889·0	No. obs.
	h m s	° ′ ″			h m s	° ′ ″			h m s	° ′ ″	
a	0 42 25·398	+ 8 36 56·72	2	m	0 50 52·432	+14 10 27·64	3	y*	0 59 57·160	+14 23 14·44	3
b	42 31·210	9 39 9·68	2	n	50 59·343	9 24 54·73	3	α	1 1 59·745	15 16 14·91	2
d	44 46·840	9 48 22·79	2	o	51 33·110	11 49 44·04	2	β	2 2·262	16 49 9·91	2
e	45 46·235	12 10 51·39	2	p	52 5·028	13 5 42·56	3	γ	2 35·040	17 3 39·75	2
e′	46 20·462	9 59 50·76	2	q	53 53·823	14 0 36·40	3	ε	5 3·972	17 48 4·35	3
f	46 40·180	13 2 41·77	3	r	55 25·755	10 34 57·38	3	ζ	5 10·352	16 11 11·47	3
g	47 0·795	9 12 3·60	3	s	55 33·008	11 18 48·74	4	η	5 24·170	14 6 3·48	3
h	48 3·065	10 31 10·99	3	t	56 43·730	13 39 15·72	1	θ	6 55·902	16 10 28·39	3
i	49 12·096	12 14 41·49	3	v	57 16·535	12 27 7·61	2	κ	10 15·898	17 2 51·85	3
k	50 19·743	13 21 0·68	3	w	58 0·750	13 20 24·89	2	λ	11 34·498	15 46 6·70	3
l	50 40·595	12 6 42·89	2	x	59 13·775	14 20 55·92	4	μ	12 26·161	17 59 30·33	4

The mean error of a reduced observation becomes, from these and the additional stars, in R.A. ± 0ˢ·065, in Dec. ± 0″·94 from 118 observations of 44 stars. If no day corrections had been applied, these numbers would be ± 0ˢ·070 and ± 1″·01 ; the sums of the squares are reduced from 0·3634 and 75·77 to 0·2716 and 56·28, which is not much more than in the proportion the divisor is reduced by the introduction of the day corrections.

Dividing the stars into two classes, stars not fainter than 8ᵐ·0 *B.D.* and fainter stars, 8ᵐ·2 to 9ᵐ·1 *B.D.*, the mean error would be found—

for first class	± 0ˢ·064	± 0″·73	from 37 obs. of 13 stars
„ second class	0·066	1·02	„ 81 „ 31 „

The difference noticed by the observer in the accuracy of the Right Ascensions does not appear here, and that shown by the Declinations appears altogether accidental.

Digitized by Google

CAPE OF GOOD HOPE.

The *Sappho* stars were observed by two of the three observers who had observed the *Victoria* stars, in the same manner as these. The following are the results communicated by Dr. Gill.

Observations made by G. Maclear.

Reference Stars.

1889	A		B		C		D		Mean deviations	
	$0^h\ 31^m$	$+10°\ 49'$	$0^h\ 37^m$	$+16°\ 3'$	$1^h\ 17^m$	$+10°\ 47'$	$1^h\ 22^m$	$+16°\ 30'$	$\Delta\alpha$	$\Delta\delta$
	s	″	s	″	s	″	s	″	s	″
Sept. 11	32·08	32·56	4·29	23·29	2·23	13·73	25·97	15·53	+ 0·020	− 0·31
13	31·89*	32·53	...	...	·22	12·98	·92	16·24	− 32	− 42
19	·97	31·88	·17	22·76	·26	14·03	·99	16·98	− 24	− 17
24	32·06	31·90	·25	23·39	·15	13·26	26·06	15·98	+ 9	− 45
26	·08	32·66	·35	23·43	·23	14·32	25·96	17·17	+ 34	+ 31
28	·07	31·73	·24	23·14	·17	14·26	·95	17·09	− 14	− 3
30	·09	33·00	·23	22·76	·13	13·88	·95	16·80	− 21	+ 2
Oct. 2	·01	32·24	·30	23·13	·10	13·13	·84	17·91	− 59	+ 2
4	·00	32·96	·23	23·75	·11	14·60	·94	17·54	− 51	+ 63
10	·07	33·26	·48	23·03	·29	12·60	·80	16·55	+ 39	− 22
12	·14	32·09	·40	23·73	·22	13·74	·97	16·19	+ 61	− 15
14	·12	32·18	·35	23·10	·29	14·18	26·02	16·63	+ 74	− 6
18	·10	32·70	·26	22·81	·14	13·83	25·96	16·59	− 6	− 10
22	·03	32·39	·30	23·20	·15	14·03	·92	16·97	− 21	+ 6
24	·07	32·89	·36	23·07	·16	13·64	26·05	17·11	+ 39	+ 9
30	·04	32·19	·26	23·05	·17	13·45	25·98	15·91	− 9	− 43
Nov. 5	·06	33·08	·25	23·81	·18	14·52	·98	17·11	− 4	+ 54
7	·14	33·02	·36	24·27	·18	14·75	·97	16·58	+ 41	+ 57
11	·15	33·02	·29	23·43	·25	14·22	26·02	16·52	+ 56	+ 21
13	·11	31·76	·35	23·29	·21	13·37	25·92	16·00	+ 26	− 48
15	·09	30·85	·24	23·08	·15	12·74	·93	16·46	− 19	− 80
19	·06	32·46	·33	23·67	·14	13·95	·94	16·90	− 4	+ 16
22	·07	32·63	·27	23·44	·15	13·93	26·00	16·42	+ 1	+ 2
23	31·96	33·09	·25	23·84	·09	14·38	25·91	16·67	− 69	+ 41
26	...	...	·19	23·59	·18	14·70	·91	17·63	− 48	+ 68
28	...	...	...	...	·19	13·81	·96	16·51	+ 7	− 11
Mean ...	32·061	32·46	4·292	23·34	2·182	13·85	25·955	16·69		

* 3 wires only, w. ½

Digitized by Google

Comparison Stars.

1889	R.A.	Dec.	1889	R.A.	Dec.	1889	R.A.	Dec.	1889	R.A.	Dec.	1889	R.A.	Dec.
a	s	″	**h**	s	″	**q**	s	″	**y***	s	″	**ζ**	s	″
Sept. 11	25·30	58·01	Oct. 2	3·11	12·61	Sept. 26	53·90	38·25	Oct. 10	57·07	16·04	Oct. 4	10·20	13·02
13	·28	57·20	10	·01	11·85	28	·73	39·36	18	·05	15·88	10	·29	11·79
Oct. 10	·32	58·25	12	·08	12·30				30	·02	15·50	30	·21	11·27
14	·29	57·23	14	·05	12·99	**r**			Nov. 11	·08	16·16	Nov. 11	·29	12·96
			Nov. 7	2·96	12·78	Oct. 2	25·58	59·08	13	·12	16·67	13	·23	12·55
b			**i**			18	·64	59·63						
Sept. 19	31·07	11·44				**s**						**η**		
30	·07	11·81	Sept. 26	12·02	45·13				**z**			Oct. 12	24·18	4·82
			28	11·98	45·07	Oct. 4	32·80	51·46	Sept. 11	29·63	10·22	22	·14	5·49
c			**k**			24	·89	51·86	13	·46	·41	Nov. 5	·13	6·46
Sept. 26	24·40	35·15	Oct. 4	19·63	2·85	30	·93	49·90				7	·02	5·47
Oct. 2	·39	35·99	Nov. 11	·69	1·83	Nov. 7	·93	51·47						
12	·39	36·31	13	·74	2·02				**α**			**θ**		
18	·47	35·71				**t**			Oct. 12	59·64	15·85	Oct. 4	55·76	29·80
			l			Sept. 11	43·63	17·21	22	·59	15·64	10	·94	28·54
d			Oct. 30	40·35	45·15	30	·58	18·21	Nov. 5	·58	16·54	Nov. 22	·87	30·23
Sept. 28	46·74	25·36	Nov. 15	·45	43·06	Oct. 22	·56	19·80	23	·45	15·91			
Oct. 4	·67	25·71				Nov. 5	·60	18·42	28	·40	13·95	**ι**		
Nov. 13	·80	24·94	**m**			11	·47	17·90				Sept. 30	13·83	44·74
15	·83	24·78	Oct. 24	52·39	30·90	**u**			**β**			Oct. 2	·84	45·10
19	·68	25·12	Nov. 19	·34	29·83	Oct. 14	9·76	27·09				14	·86	45·16
						Nov. 13	·73	28·01	Oct. 14	2·20	11·13	Nov. 23	·80	45·40
e			**n**			15	·83	25·30	Nov. 22	·18	11·28			
Sept. 24	46·13	51·49	Sept. 30	59·20	54·76							**κ**		
Nov. 5	·18	53·14	Nov. 22	·24	53·92	**v**						Sept. 26	15·86	53·89
7	·19	52·42	23	·14	54·35	Oct. 12	16·45	10·43				28	·79	53·91
11	·25	52·53	26	·23	55·31	Nov. 19	·34	10·79	**γ**			Oct. 18	·76	53·40
22	·17	52·73				22	·40	10·76	Nov. 7	34·88	41·68	22	·83	55·41
23	·10	52·79	**o**			23	·31	10·92	15	·85	40·49			
26	·11	52·93	Sept. 11	32·98	46·11				19	·88	41·56	**λ**		
28	·13	53·01	13	·92	45·88	**w**			26	·89	41·73	Oct. 4	34·31	7·88
			Oct. 22	·99	46·44	Sept. 26	0·56	26·47				10	·48	7·59
f			Nov. 13	·96	45·59	28	·55	27·62				12	·43	7·73
Sept. 19	40·04	43·98	**p**			**x**			**δ**					
30	·08	44·65	Sept. 24	4·88	42·17	Sept. 24	13·67	54·60	Oct. 2	18·03	61·58	**μ**		
			Nov. 5	5·01	45·24	Oct. 24	·76	56·64	18	·30	59·09	Sept. 30	26·05	32·62
g			7	·08	45·10	Nov. 11	·72	56·72				Oct. 2	·11	31·70
Sept. 11	0·73	6·07	11	·02	44·85	13	·77	56·94				14	·19	30·74
13	·70	5·41	23	4·97	45·29	15	·63	55·37	**ε**			Nov. 22	·07	31·90
			26	5·03	44·67	19	·74	56·64	Sept. 11	3·85	6·84			
			28	4·99	44·40	26	·71	56·79	Oct. 24	·92	7·37			

Digitized by Google

Observations made by R. Pett.
Reference Stars.

1889		A		B		C		D		Mean Deviations	
		$0^h\ 31^m$	$+\ 10°\ 49'$	$0^h\ 37^m$	$+\ 16°\ 3'$	$1^h\ 17^m$	$+\ 10°\ 47'$	$1^h\ 22^m$	$+\ 16°\ 30'$	$\Delta\alpha$	$\Delta\delta$
		s	"	s	"	s	"	s	"	s	"
Sept.	10	32·07	32·80	4·29	23·89	2·23	14·64	26·03	17·15	+ 0·010	+ 0·42
	12	·10	33·05	·38	23·49	·20	13·92	·01	16·74	+ 27	+ 10
	18	·12	32·81	·36	23·60	·24	14·35	·01	17·34	+ 38	+ 32
	23	·03	31·17	·32	22·62	·22	13·67	·00	16·40	— 2	— 73
	25	·04	32·87	·31	23·65	·21	14·19	25·99	16·81	— 8	+ 18
	27	·14	33·07	·31	23·76	·21	14·70	26·02	17·68	+ 25	+ 60
Oct.	1	·11	33·41	·37	23·92	·23	14·10	25·96	16·96	+ 22	+ 40
	5	·06	32·67	·28	24·24	·24	14·68	·94	17·23	— 15	+ 50
	6	·03	33·06	·30	22·64	...	...	...	...	— 30	— 20
	9	·18	32·72	·30	23·88	·21	13·41	26·03	17·27	+ 35	+ 12
	15	·06	32·63	·27	24·17	·26	14·58	25·97	17·42	— 5	+ 50
	19	·09	32·35	·09	23·12	·11	13·17	·93	15·90	— 90	— 57
	21	·06	31·66	·31	24·04	·17	13·45	26·01	16·96	— 7	— 17
	25	·03	32·95	·31	23·26	·28	14·10	·01	16·70	+ 12	+ 5
	29	·13	32·71	·32	22·71	·23	13·95	25·98	16·05	+ 20	— 35
	31	·15	33·10	·33	24·05	·21	13·80	·98	17·25	+ 22	+ 35
Nov.	4	·06	33·14	·33	24·03	·18	13·98	·93	17·13	— 20	+ 37
	6	·09	32·93	·40	23·83	·26	13·74	·96	17·55	+ 33	+ 31
	8	·02	31·91	·31	22·06	·22	12·53	...	...	— 17	— 1·15
	12	·03	32·12	·36	22·23	·13	13·16	·95	16·13	— 27	— 79
	17	·08	31·70	·28	22·58	·17	13·51	·85	16·40	— 50	— 65
	18	·06	33·16	·34	23·55	·16	14·27	26·04	17·33	+ 5	+ 38
	20	·11	32·77	·36	23·47	·29	13·78	·03	16·60	+ 52	— 5
	25	31·99	33·28	·28	23·43	·15	12·97	25·99	15·80	— 42	— 33
Mean	...	32·077	32·67	4·313	23·43	2·209	13·85	25·983	16·85		

Comparison Stars.

1889	R.A.	Dec.	1889	R.A.	Dec.	1889	R.A.	Dec.	1889	R.A.	Dec.	1889	R.A.	Dec.
a	s	"	b	s	"	c	s	"	d	s	"	e	s	"
Sept. 10	25·25	57·86	Sept. 18	31·03	11·90	Oct. 1	24·42	36·33	Oct. 5	46·70	26·32	Sept. 25	...	52·78
12	·34	57·79	23	30·96	11·09	25	·43	36·33	19	·60	25·07	27	46·22	53·26
Oct. 9	·26	57·40	Oct. 19	31·07	11·33	Nov. 4	·31	35·89	Nov. 12	·74	24·25	Oct. 6	·19	53·10
15	·27	58·33				6	·37	36·14	17	·79	24·72	21	·22	52·54
									20	·75	24·99	31	·21	53·22
												Nov. 8	·12	51·98
												18	·22	52·60

Digitized by Google

1889	R.A.	Dec.	1889	R.A.	Dec.	1889	R.A.	Dec.	1889	R.A.	Dec.	1889	R.A.	Dec.
f	s	″	n	s	″	t	s	″	z	s	″	η	s	″
Sept. 12	40·11	44·44	Oct. 29	59·27	52·80	Sept. 25	43·63	17·33	Sept. 25	29·66	9·84	Oct. 21	24·05	5·56
23	·09	42·96	Nov. 12	·25	53·26	Oct. 29	·57	17·12	Nov. 6	·62	10·75	29	·06	5·00
			20	·21	54·27	Nov. 6	·50	19·02				31	·08	5·47
			25	·21	54·29	12	·53	17·22	α			Nov. 4	·01	5·82
g						20	·53	17·77						
Oct. 1	0·74	5·55	o						Oct. 6	59·61	15·00	θ		
9	·72	5·80				u			31	·65	16·18			
			Oct. 1	32·91	46·68				Nov. 4	·56	15·68	Oct. 1	55·84	29·96
			9	·86	46·77	Sept. 27	9·75	27·45	12	·59	14·65	9	·87	29·88
h			Nov. 4	·91	47·00	Oct. 25	·73	28·80	18	·60	15·79	25	·81	29·86
Sept. 25	2·92	13·15	6	·91	47·37	Nov. 4	·65	27·02				Nov. 6	·78	29·92
27	3·06	12·75							β					
Oct. 15	2·96	13·24	p			v			Oct. 29	2·15	10·94	ι		
Nov. 4	·97	12·34	Sept. 25	...	45·63	Oct. 31	16·39	10·78	Nov. 17	·22	10·84	Sept. 12	13·90	45·09
6	·95	13·02	27	5·06	45·12	Nov. 17	·41	10·09				27	·86	45·45
			Oct. 6	·10	44·43	18	·38	10·56				Oct. 5	·88	46·31
			21	·00	44·81	25	·29	10·57	γ			Nov. 20	·85	45·10
i			31	·07	44·18				Sept. 18	34·87	41·16			
Oct. 5	11·95	46·15	Nov. 8	4·99	44·30	w			Oct. 5	·86	42·13			
29	·98	44·01	18	5·03	44·98	Sept. 18	0·63	27·29	Nov. 20	·88	41·41	κ		
						Oct. 29	·55	25·35	25	·86	40·81	Sept. 18	15·79	53·46
												Oct. 6	·82	53·17
k			q			x			δ			15	·79	54·51
Sept. 10	19·72	3·31	Sept. 18	53·84	38·83	Sept. 10	13·77	56·55	Sept. 10	18·31	60·34	19	·70	53·81
12	·78	2·54	Oct. 5	·84	39·28	12	·77	56·76	12	·37	59·48			
Oct. 25	·74	2·53				23	·77	56·95				λ		
						Oct. 15	·81	57·41	ε			Sept. 25	34·44	7·98
			r			19	·72	56·09	Oct. 15	3·74	6·48	Oct. 1	·42	8·25
l			Sept. 10	25·68	59·81	21	·83	56·78	19	·77	6·49	9	·44	7·99
Sept. 18	40·42	44·49	23	·66	59·02	25	·77	56·73				Nov. 12	·38	7·50
23	·47	43·44				y*			ζ					
			s			Sept. 10	57·01	16·21	Oct. 1	10·29	13·29	μ		
			Sept. 12	32·89	51·30	Oct. 9	·05	16·34	9	·30	12·19	Sept. 23	26·05	31·45
m			Oct. 1	·86	51·44	15	56·86	15·77	25	·21	12·83	27	·09	32·20
Nov. 17	52·38	30·15	15	·84	52·20	19	57·00	14·60	Nov. 6	·17	13·30	Oct. 5	·05	33·16
18	·35	30·55	19	·83	52·46	25	·02	15·85	12	·29	11·26	21	·08	32·34

The mean daily deviations of the observations of the reference stars from their simple means are given in the first parts of the preceding table. The means for the two observers however are not accordant; the difference is—

		s	″		s	″
M. — P. star	A	— 0·016	— 0·21	mean	— 0·023	— 0·12
	B	— 0·021	— 0·09			
	C	— 0·027	— 0·01			
	D	— 0·028	— 0·16			

Digitized by Google

Half this mean difference ($\mp 0^s\cdot011$ for R.A.) was combined with the observed day deviations to approximately reduce at once the positions to the mean of the two observers, making the day corrections as follows :—

Maclear's observations			Maclear's observations			Pett's observations			Pett's observations		
	s	′		s	′		s	′		s	′
Sept. 11	−0·009	+0·37	Oct. 22	+0·032	0·00	Sept. 10	−0·021	−0·48	Oct. 21	−0·004	+0·11
13	+ 43	+ 48	24	− 28	− 3	12	− 38	− 16	25	− 23	− 11
19	+ 35	+ 23	30	+ 20	+ 49	18	− 49	− 38	29	− 31	+ 29
24	+ 2	+ 51	Nov. 5	+ 15	− 48	23	− 9	+ 67	31	− 33	− 41
26	− 23	− 25	7	− 30	− 51	25	− 3	− 24	Nov. 4	+ 9	− 43
28	+ 25	+ 9	11	− 45	− 15	27	− 36	− 66	6	− 44	− 37
30	+ 32	+ 4	13	− 15	+ 54	Oct. 1	− 33	− 46	8	+ 6	+1·09
Oct. 2	+ 70	+ 4	15	+ 30	+ 86	5	+ 4	− 56	12	+ 16	+ 73
4	+ 62	− 57	19	+ 15	− 10	6	+ 19	+ 14	17	+ 39	+ 59
10	− 28	+ 28	22	+ 10	+ 4	9	− 46	− 18	18	− 16	− 44
12	− 50	+ 21	23	+ 80	− 35	15	− 6	− 56	20	− 63	− 1
14	− 63	+ 12	26	+ 59	− 62	19	+ 79	+ 51	25	+ 31	+ 27
18	+ 17	+ 16	28	+ 4	+ 17						

These corrections were applied to the observations, and means taken for each star separately for the two observers. It then became apparent that the constant reduction to $\frac{1}{2}$(M. + P.) already appliedw as by no means sufficient to make the two series agree, but that a considerable variation existed both for R.A. and for Dec. Grouping the stars according to their *B.D.* magnitudes the following mean differences P. − M. were found between the means of the reduced observations, assuming weights for the means equal to the number of observations :—

	m	m	s	′
from 5 stars	5·5 to 6·5, m.m.	6·04	$\Delta\alpha$ = + 0·033 w. 11·2	$\Delta\delta$ = + 0·27 (11·5)
„ 6 „	7·0 „ 7·3	7·19	+ 2 52·5	+ 0·01
„ 10 „	7·7 „ 8·2	8·01	− 34 17·5	+ 0·06
„ 10 „	8·3 „ 8·5	8·46	− 37 19·2	− 0·20
„ 10 „	8·6 „ 9·0	8·77	− 39 15·4	− 0·29

These values are represented very closely by the formulæ—

$$\Delta\alpha = -0^s\cdot008 - 0^s\cdot027\,(M - 7\cdot5) \qquad \Delta\delta = -0'\cdot01 - 0'\cdot19\,(M - 7\cdot5).$$

The total difference in the *Sappho* observations is therefore—

$$\text{P.} - \text{M.}, \quad \Delta\alpha = +0^s\cdot015 - 0^s\cdot027\,(M - 7\cdot5) \qquad \Delta\delta = +0'\cdot11 - 0'\cdot19\,(M - 7\cdot5).$$

It is quite contrary to expectation that the two terms in these expressions should have opposite signs. It is of little importance, however, in what manner the difference

Digitized by Google

between the two observers is accounted for, as they have both, with few exceptions, observed each of the *Sappho* stars an equal number of times. In the remaining cases the first couple of formulæ were used to correct the previous means of the reduced observations before taking the general means, which are given in the following table :—

Mean Results of Cape Observations, reduced to $\frac{1}{2}$(M. + P.).

Star	R.A. 1889·0	Dec. 1889·0	No. obs.	Star	R.A. 1889·0	Dec. 1889·0	No. obs.	Star	R.A. 1889·0	Dec. 1889·0	No. obs.
	h m s	° ′ ″			h m s	° ′ ″			h m s	° ′ ″	
A	0 31 32·069	+10 49 32·58	48	n	0 50 59·235	+ 9 24 54·17	8	β	1 2 2·176	+16 49 11·31	4
B	37 4·302	.16 3 23·38	48	o	51 32·923	11 49 46·47	8	γ	2 34·871	17 3 41·24	8
a	42 25·267	8 36 57·74	8	p	52 5·020	13 5 44·52	13, 14	δ	4 18·259	15 4 59·86	4
b	42 31·063	9 39 11·77	5	q	53 53·817	14 0 38·65	4	ε	5 3·829	17 48 6·87	4
c	44 24·388	11 13 35·83	8	r	55 25·654	10 34 59·48	4	ζ	5 10·234	16 11 12·47	10
d	44 46·749	9 48 25·33	10	s	55 32·875	11 18 51·35	8	η	5 24·072	14 6 5·36	8
e	45 46·177	12 10 52·58	14, 15	t	56 43·550	13 39 18·01	10	θ	6 55·827	16 10 29·56	7
f	46 40·085	13 2 44·20	4	u	57 9·725	15 32 27·33	6	ι	8 13·851	15 32 45·18	8
g	47 0·711	9 12 5·76	4	v	57 16·381	12 27 10·59	8	κ	10 15·804	17 2 53·91	8
h	48 2·989	10 31 12·49	10	w	58 0·553	13 20 26·62	4	λ	11 34·406	15 46 7·84	7
i	49 11·976	12 14 44·98	4	x	59 13·745	14 20 56·57	14	μ	12 26·086	17 59 31·99	8
k	50 19·703	13 21 2·35	6	y*	59 57·021	14 23 15·95	10	C	17 2·195	10 47 13·86	49
l	50 40·420	12 6 44·44	4	z	1 0 29·589	15 43 10·36	4	D	22 25·967	16 30 16·75	48
m	50 52·367	14 10 30·36	4	α	1 59·574	15 16 15·43	10				

The mean error of a reduced observation is found—

		s		″	
for Maclear,	refer. st.	± 0·0542	100 obs.	± 0·440	100 obs.
	comp. st.	0·0551	132 „	0·607	132 „
„ Pett	refer. st.	± 0·0432	93 „	± 0·394	93 „
	comp. st.	0·0492	132 „	0·478	134 „

or, indiscriminately from all stars—

	s	″	
for Maclear	± 0·0547	± 0·542	from 232 obs.
Pett	0·0468	0·446	„ 225 and 227 obs.

The introduction of the day corrections determined from the reference stars, however, does not prove to be favourable for Pett's Right Ascensions of the other stars. The sums of the squares are—

	for the unreduced observations				for the reduced observations			
	Maclear		Pett		Maclear		Pett	
refer. st.	0·351	21·54	0·217	30·44	0·2056	13·53	0·1212	10·08
comp. „	0·346	40·96	0·180	34·50	0·2885	34·95	0·2298	22·13
total	0·697	62·50	0·397	64·94	0·4941	48·48	0·3510	32·21

Digitized by Google

whence the m. e. of an unreduced observation would have been—

for Maclear,	refer. st.	± 0·0605	± 0·474	all stars	± 0·0604 ± 0·572
	comp. „	0·0603	0·657		
Pett	refer. „	0·0494	0·585	„ „	± 0·0465 ± 0·591
	comp. „	0·0435	0·596		

CINCINNATI.

The following observations were made with the Fauth Transit-Circle, in the same manner as those of the *Victoria* stars, and communicated, by Prof. Porter. They are referred to the Berlin star ephemeris in both co-ordinates :—

Reference Stars.

1889		A		B		C		D		Pos. of Circle	Mean Deviations	
		$0^h\ 31^m$	$+10°\ 49'$	$0^h\ 37^m$	$+16°\ 3'$	$1^h\ 17^m$	$+10°\ 47'$	$1^h\ 22^m$	$+16°\ 30'$		$\Delta\alpha$	$\Delta\delta$
		s	"	s	"	s	"	s	"		s	"
Sept.	7	31·94	32·6	4·49	21·6	2·21	13·1	26·11	17·2	E.	+0·05	+ 0·1
	11	32·15	31·6	·34	22·9	·29	12·8	·05	16·3	„	+0·10	— 0·1
	12	·11	31·4	·26	23·2	·25	13·5	·08	14·9	„	+0·06·	— 0·3
	14	31·98	32·4	·30	22·4	·17	13·4	25·91	15·9	„	—0·02	0·0
	17	·92	31·5	·31	22·7	·16	14·2	·99	16·2	„	—0·01·	+ 0·1
	20	·95	31·0	·25	22·0	·04	13·4	·92	16·4	„	—0·07	— 0·3
	24	32·17	33·1	·31	22·4	·31	13·3	·93	16·5	„	+0·07	+ 0·3
	26	·01	31·8	·15	22·8	·05	14·5	·89	18·7	„	—0·08·	+ 0·9
	27	·04	33·4	·31	22·1	·12	13·1	·92	17·4	W.	—0·01	+ 0·7
Oct.	2	31·86	31·4	·25	22·3	·04	14·4	·88	15·1	„	—0·10	— 0·2
	4	·95	33·0	·17	22·5	·10	14·4	·94	17·6	„	—0·07	+ 0·8·
	8	·93	30·9	·20	22·4	·02	13·4	·92	18·0	„	—0·09	+ 0·1·
	9	32·06	30·2	·24	21·5	·08	13·2	·94	15·8	„	—0·03	— 0·8·
	10	·10	30·7	·26	21·5	·10	13·9	26·03	16·7	„	+0·02	— 0·3
	14	·04	31·5	...	...	·24	13·1	25·92	15·8	„	+0·02	— 0·5
	16	31·99	31·9	·22	22·5	·02	14·0	·80	16·5	„	—0·10	+ 0·2
	18	32·11	32·1	·20	21·5	...	...	·93	15·7	„	—0·02	— 0·4
	21	·10	32·3	·30	22·3	·19	13·3	·96	16·8	„	+0·03	+ 0·1·
	29	31·96	31·8	·36	22·5	·24	14·6	·94	17·2	„	+0·01·	+ 0·5
	31	32·17	31·1	·37	21·3	·22	13·2	26·04	15·5	„	+0·09	— 0·7·
Nov.	5	·23	32·6	·50	23·1	·29	12·1	·10	16·6	E.*	+0·17	+ 0·1
	11	·05	30·8	·20	23·0	·07	12·7	25·82	15·8	„	—0·07·	— 0·4·
Means	...	32·04	31·8	4·29	22·3	2·15	13·5	25·96	16·5	...	...	...

* The instrument remained in this position till Nov. 23.

Digitized by Google

Comparison Stars.

1889	R.A.	Dec.	1889	R.A.	Dec.	1889	R.A.	Dec.	1889	R.A.	Dec.	1889	R.A.	Dec.
a	s	″	f	s	″	o	s	″	u	s	″	α	s	″
Sept. 7	25·15	56·8	Sept. 20	39·99	42·4	Sept. 14	32·89	46·2	Sept. 11	9·62	26·6	Sept. 7	59·68	13·3
11	·30	56·5	Oct. 16	·96	42·6	Oct. 4	·84	47·1	Oct. 2	·63	27·5	24	·57	15·3
27	·12	57·7	18	40·07	43·4	29	·77	45·7	29	·68	27·5	Oct. 4	·52	16·2
Oct. 9	·21	57·3				Nov. 15	33·09	45·8				9	·49	15·1
	′		g						v			Nov. 15	·53	15·7
b			Sept. 24	0·60	3·9				Sept. 20	16·36	9·7			
Sept. 12	31·14	9·8	Oct. 14	·58	5·0	p			Oct. 10	·32	9·4	β		
20	30·97	10·0	29	·51	5·0	Sept. 7	4·92	43·6	21	·36	9·9	Sept. 17	2·11	11·0
Oct. 2	·89	11·1				24	5·10	45·3	Nov. 5	·40	10·1	Oct. 16	·02	11·2
10	31·13	10·9	h			27	4·89	45·4				18	·07	11·7
			Sept. 14	2·88	13·0	Oct. 9	4·98	43·0	w					
			17	·91	12·0	18	5·04	43·0	Sept. 24	0·52	26·7	γ		
c			26	·93	12·6	Nov. 11	4·89	43·3	Oct. 9	·49	25·0	Sept. 14	34·89	40·9
Sept. 14	24·49	35·7	Oct. 4	·88	12·4	23	5·12	44·2	Nov. 11	·56	26·9	20	·77	40·1
24	·36	35·2	8	·83	12·3							Oct. 8	·80	40·6
Oct. 4	·37	34·8							x			14	·82	39·4
14	·31	32·8	i			q			Sept. 14	13·76	55·5			
16	·27	35·2	Sept. 7	12·03	45·3	Sept. 11	53·91	38·5	17	·78	56·9	δ		
			27	11·84	45·0	12	·86	38·2	27	·78	55·9	Sept. 11	18·33	59·3
d			Oct. 9	·91	43·9	Oct. 2	·69	37·2	Oct. 8	·69	55·1	Oct. 10	·24	57·5
Sept. 17	46·70	24·7							16	·63	55·2	21	·31	57·8
26	·67	24·1	k						18	·80	55·5			
Oct. 8	·67	23·8	Sept. 11	19·73	1·9	r			Nov. 15	·63	57·1	ε		
18	·94	24·0	Oct. 2	·62	0·4	Sept. 7	25·67	58·3				Oct. 4	3·76	7·3
Nov. 5	·72	25·2	14	·63	0·7	17	·67	58·5	y*			9	·72	6·0
						27	·68	59·7	Sept. 12	57·14	14·3	Nov. 5	4·02	6·4
e			l						20	56·96	14·4	15	3·78	6·7
Sept. 7	46·28	51·2	Sept. 12	40·33	43·6				26	·99	15·3			
11	·26	51·9	Oct. 16	·45	44·1	s			Oct. 14	57·06	14·4			
27	·24	51·4	31	·37	43·2	Sept. 14	32·87	51·5	21	·12	14·7	ζ		
Oct. 2	45·99	50·9				24	·91	51·7				Sept. 12	10·22	12·1
21	46·14	52·3	m			Oct. 4	·84	52·5	y			17	·18	11·8
Nov. 11	·06	52·4	Sept. 20	52·33	28·6	16	·72	50·6	Oct. 29	4·29	23·9	Oct. 2	·23	13·5
23	·20	52·3	Oct. 10	·24	29·5				31	·31	23·4	16	·11	12·4
			Nov. 5	·36	30·5				Nov. 5	·52	23·1	18	·23	12·3
e′						t			23	·34	24·1			
Sept. 12	20·31	52·8	n			Sept. 12	43·58	16·5				η		
Oct. 9	·30	51·5	Sept. 17	59·14	54·0	26	·65	17·6	z			Sept. 14	23·93	5·3
10	·32	52·0	26	·11	53·5	Oct. 14	·40	16·6	Sept. 11	29·58	9·4	Oct. 8	·99	5·1
31	·45	50·9	Oct. 8	·06	53·2	18	·47	17·8	Oct. 10	·59	9·7	14	24·01	4·7
Nov. 15	·43	53·0	21	·21	54·7	31	·48	18·1	Nov. 11	·64	10·2	Nov. 11	23·86	4·5

Digitized by Google

1889	R.A.	Dec.	1889	R.A.	Dec.	1889	R.A.	Dec.	1889	R.A.	Dec.	1889	R.A.	Dec.
θ	s	″	ι	s	″	κ	s	″	λ	s	″	μ	s	″
Sept. 26	55·71	29·2	Sept. 7	13·91	45·0	Sept. 24	15·80	53·8	Sept. 7	34·18	6·8	Sept. 12	26·15	31·1
27	·69	30·0	11	·75	44·4	26	·86	53·4	20	·41	6·7	14	·04	30·9
Oct. 10	·72	28·7	Oct. 2	·78	44·2	27	·70	53·9	Oct. 2	·22	8·5	27	25·92	32·0
						Oct. 4	·85	53·4	8	·25	7·5	Oct. 9	·95	31·3

The daily mean deviations of the places found for the reference stars, which are tabulated above, were deduced from the places given for the comparison stars ; for the last two days, when no reference stars had been observed, the following corrections were applied :— Nov. 11 $-0^{s}\cdot03-0''\cdot4$, Nov. 23 $-0^{s}\cdot08-0''\cdot5$.

A difference of $0^{s}\cdot04$ between the Right Ascensions obtained in the two positions of the instrument seems to be indicated by the reference stars; but as the effect of the greater part of this discordance is included in the day corrections, and the observations are divided between Circle E. and Circle W. for all stars, the discrepancy could be neglected. The places of the reference stars change only by small fractions of the last decimal employed in the first approximation from the incompleteness of their observation on two days. The following are the adopted mean results :—

Star	R.A. 1889·0	Dec. 1889·0	No. obs.	Star	R.A. 1889·0	Dec. 1889·0	No. obs.	Star	R.A. 1889·0	Dec. 1889·0	No. obs.
	h m s	° ′ ″			h m s	° ′ ″			h m s	° ′ ″	
A	0 31 32·040	+10 49 31·78	22	n	0 50 59·170	+ 9 24 53·52	4	α	1 1 59·548	+15 16 14·96	5
B	37 4·289	16 3 22·28	21	o	51 32·909	11 49 45·76	4	β	2 2·112	16 49 11·33	3
a	42 25·195	8 36 57·11	4	p	52 4·982	13 5 43·98	7	γ	2 34·860	17 3 40·41	4
b	42 31·055	9 39 10·47	4	q	53 53·798	14 0 38·17	3	δ	4 18·243	15 4 58·28	3
c	44 24·380	11 13 34·57	5	r	55 25·665	10 34 58·53	3	ϵ	5 3·795	17 48 6·47	4
d	44 46·748	9 48 24·19	5	s	55 32·865	11 18 51·24	4	ζ	5 10·228	16 11 12·54	5
e	45 46·156	12 10 51·67	7	t	56 43·502	13 39 17·53	5	η	5 23·964	14 6 5·10	4
e′	46 20·327	9 59 52·40	5	u	57 9·638	15 32 27·13	3	θ	6 55·732	16 10 28·87	3
f	46 40·070	13 2 42·97	3	v	57 16·322	12 27 9·86	4	ι	8 13·797	15 32 44·60	3
g	47 0·528	9 12 4·95	3	w	58 0·535	13 20 26·53	3	κ	10 15·826	17 2 52·94	4
h	48 2·942	10 31 12·06	5	x	59 13·756	14 20 55·72	7	λ	11 34·317	15 46 7·44	4
i	49 11·923	12 14 44·75	3	y*	59 57·062	14 23 14·63	5	μ	12 26·014	17 59 31·44	4
k	50 19·653	13 21 1·27	3	y	1 0 4·277	14 47 23·54	4	C	17 2·155	10 47 13·49	21
l	50 40·365	12 6 43·92	3	z	0 29·588	15 43 10·05	3	D	22 25·958	16 30 16·49	22
m	50 52·270	14 10 29·70	3								

The m. e. of an observation is found—

		s	′	
for the ref. stars :	in R.A.	±0·065,	in Dec. ±0·71,	from 86 obs.
,, comp.	,,	0·084	,, 0·66	,, 158 ,,

Without day corrections, and neglecting the difference in R.A. between the two positions, the m. e. for the reference stars would have been $\pm0^{s}\cdot094$ $\pm0''\cdot77$.

Digitized by Google

DUBLIN.

The observations made by Mr. Rambaut with the Martins Meridian-Circle of the Dunsink Observatory are published at length in the *Monthly Notices*, vol. LI., January 1891.

Complete observations of the four reference stars were obtained on each evening, which give the following day corrections, $\Delta\alpha$ and $\Delta\delta$ being compared with the simple means from all observations. No perceptible difference exists in the *Sappho* series between the results obtained in the two positions of the instrument.

1889	$\Delta\alpha$	$\Delta\delta$	1889	$\Delta\alpha$	$\Delta\delta$	1889	$\Delta\alpha$	$\Delta\delta$	1889-90	$\Delta\alpha$	$\Delta\delta$
	s	″		s	″		s	″		s	″
Aug. 30	−0·036	+ 0·32	Oct. 10	+0·019	+ 0·20	Nov. 19	+0·011	+ 0·65	Dec. 15	+0·086	− 0·85
Sept. 17	− 1	− 0·18	11	− 6	+ 0·07	25	+ 9	− 0·13	20	+ 6	− 0·55
19	− 16	+ 0·05	12	− 6	+ 0·22	27	− 71	− 0·18	24	+ 1	+ 0·25
24	− 54	+ 0·32	13	− 1	+ 0·25	28	− 58	− 0·40	Jan. 2	+ 1	− 0·08
25	+ 104	− 0·88	30	+ 1	+ 0·37	Dec. 7	+ 29	+ 0·10			
Oct. 7	− 11	− 0·40	Nov. 16	− 1	+ 0·22	10	+ 4	− 0·03			
8	+ 16	+ 0·30	18	− 21	+ 0·10	11	− 14	+ 0·22			

Means of the Reduced Observations.

Star	R.A. 1889·0	Dec. 1889·0	No. obs.	Star	R.A. 1889·0	Dec. 1889·0	No. obs.	Star	R.A. 1889·0	Dec. 1889·0	No. obs.
	h m s	° ′ ″			h m s	° ′ ″			h m s	° ′ ″	
A	0 31 32·035	+10 49 32·28	25	n	0 50 59·228	+ 9 24 53·91	2	α	1 1 59·493	+15 16 15·98	3
B	37 4·262	16 3 23·37	24, 25	o	51 32·839	11 49 46·16	3	β	2 2·118	16 49 11·36	2
a	42 25·242	8 36 56·77	5	p	52 4·978	13 5 44·98	5	γ	2 34·878	17 3 41·23	5, 4
b	42 31·061	9 39 11·56	3	q	53 53·686	14 0 38·24	2	δ	4 18·292	15 4 58·92	3
c	44 24·326	11 13 36·10	4, 3	r	55 25·554	10 34 59·06	2	ε	5 3·714	17 48 6·74	2
d	44 46·761	9 48 24·61	3	s	55 32·898	11 18 51·83	5, 4	ζ	5 10·186	16 11 12·82	4
e	45 46·141	12 10 52·60	6	t	56 43·533	13 39 18·21	3	η	5 24·027	14 6 6·33	3
e′	46 20·465	9 59 52·68	4	u	57 9·655	15 32 26·57	2	θ	6 55·792	16 10 29·41	2
f	46 39·983	13 2 44·11	2	v	57 16·334	12 27 10·74	2	ι	8 13·813	15 32 45·12	4
g	47 0·634	9 12 5·20	2	w	58 0·459	13 20 27·75	1	κ	10 15·758	17 2 53·84	6
h	48 2·949	10 31 12·46	4	x	59 13·721	14 20 56·50	5	λ	11 34·358	15 46 8·93	6
i	49 11·985	12 14 44·72	2	y*	59 57·014	14 23 16·12	2	μ	12 26·022	17 59 31·64	8
k	50 19·694	13 21 1·34	3	y	1 0 4·315	14 47 24·58	2	C	17 2·159	10 47 13·93	25
l	50 40·372	12 6 44·91	2	z	0 29·592	15 43 9·84	2	D	22 25·939	16 30 17·01	25
m	50 52·324	14 10 30·80	2								

The m. e. of a reduced observation is found—

s ″
for the ref. stars : in R.A. ± 0·038, in Dec. ± 0·60 from 99 and 100 obs.
„ comp. „ „ „ 0·048. „ „ 0·67 „ 127 „ 124 „

Digitized by Google

The m. e. appears to increase in this series with diminishing magnitude, the seven brightest among the comparison stars giving smaller values than the reference stars. Combining these two groups and separating them from the remainder of the stars, the values of the m. e. become—

for 11 stars	6·0 to 7·3 :	in R.A. ± 0·038 (127 obs.) ;	in Dec. ± 0·47 (128 obs.).
„ 31	„ 7·7 to 9·0	„ 0·050 (99 obs.)	„ 0·72 (96 obs.).

GREENWICH.

Observations of the *Sappho* stars were made at the Royal Observatory during the years 1889 and 1890. The places for the beginning of these years were communicated by Mr. Christie, reduced throughout with the R—D correction deduced from the observations of 1889. Afterwards they have been published in the annual volumes.

Taking general means of all the places reduced to 1889·0 and comparing the individual results with them, day corrections were determined for those 26 of the 50 days of observation, on which at least four stars had been observed ; double weight was given in this determination to the reference stars. One more correction was determined for December 12, 1889, when only three stars had been observed, but the weight became 4, one of them being a reference star. The following are the adopted values :—

1889	Δα	Δδ	Star	Obs.	1889	Δα	Δδ	Star	Obs.	1889–90	Δα	Δδ	Star	Obs.
	s	″				s	″				s	″		
Sept. 10	+0·014	+0·29	6	WR	Oct. 14	−0·064	+0·24	9	WR	Nov. 30	+0·043	−0·94	8	R
17	+ 11	+0·33	9	RW	31	+ 85	−0·45	10	WR	Dec. 12	− 20	+0·78	3	AM
20	− 13	−0·49	7	AD	Nov. 6	+ 4	−0·60	4	AD	Jan. 1	− 6	−0·12	4	HF
24	− 23	−0·43	6	AD	8	− 10	−0·03	7	R	4	+ 4	+0·69	5, 4	WR
25	+ 135	−1·14	9	AC	12	− 11	+0·51	7	AC	16	− 62	+0·50	4	RW
26	+ 14	+0·75	9	R	13	− 53	+0·07	10	JP	Oct. 3	...	+0·30	5	WR
Oct. 3	...	+0·13	6	T	26	− 34	+0·05	8	AD	8	− 13	−0·47	5	T
7	+ 15	−0·56	4	AP	27	− 62	−0·32	4	L	16	+ 31	+0·82	11	L
12	− 15	−0·12	8	L	28	− 24	+0·02	4	AC	Nov. 1	+ 74	−0·46	4	CM

The differences between the mean Δα and Δδ for the different observers appear accidental. The average value of a day correction is 0ˢ·033 and 0″·43, that is, little more than half the m. e. of an observation. The few observations, therefore, scattered over the remaining 23 days (one with three and nine with two stars) were used without correction.

Digitized by Google

The mean results, and the corrections of the first means, expressed in $0^s.001$ and $0''.01$, are the following :—

Star	R.A. 1889·0	Dec. 1889·0	No. obs.	II − I	Star	R.A. 1889·0	Dec. 1889·0	No. obs.	II − I
	h m s	° ′ ″				h m s	° ′ ″		
A	0 31 32·035	+10 49 31·84	17	+ 7 −10	t	0 56 43·560	+13 39 17·27	5	− 2 − 7
B	37 4·285	16 3 22·36	18	+ 4 − 8	u	57 9·707	15 32 26·94	3	+10 −37
a	42 25·190	8 36 56·40	4	− 2 − 7	v	57 16·362	12 27 9·59	5	+ 6 +28
b	42 31·008	9 39 10·65	3	+55 −32	w	58 0·681	13 20 26·35	1	+74 −46
c	44 24·384	11 13 34·97	4	+ 2 − 9	x	59 13·734	14 20 55·37	7, 8	+15 −19
d	44 46·697	9 48 24·31	5	−21 0	y*	59 57·000	14 23 15·27	6	−12 −10
e	45 46·155	12 10 51·58	7	+ 1 + 8	z	1 0 29·608	15 43 9·50	4	0 + 7
e′	46 20·321	9 59 52·10	5	+25 −28	α	1 59·571	15 16 14·80	5	−13 −28
f	46 40·015	13 2 43·64	3	+ 5 + 3	β	2 2·118	16 49 9·85	4. 5	−11 +23
g	47 0·759	9 12 5·18	4	−11 − 4	γ	2 34·891	17 3 40·47	3	+35 +12
h	48 2·969	10 31 11·82	5, 6	− 1 +13	δ	4 18·292	15 4 58·03	4, 5	−12 +26
i	49 11·944	12 14 44·00	3	− 1 −24	ε	5 3·812	17 48 6·32	3	+49 −27
k	50 19·639	13 21 1·85	4	− 1 0	ζ	5 10·203	16 11 11·69	5	− 3 + 3
l	50 40·354	12 6 43·27	3	− 3 +11	η	5 24·062	14 6 3·81	6[1]	−37 −56
m	50 52·300	14 10 29·77	3	+ 7 − 7	θ	6 55·769	16 10 28·19	3, 4	+14 +29
n	50 59·215	9 24 52·75	3	+10 +27	ι	8 13·808	15 32 44·35	4	+20 +14
o	51 32·957	11 49 44·95	5	−16 +29	κ	10 15·780	17 2 53·19	5	+12 −31
p	52 5·001	13 5 43·36	7, 8	+16 − 1	λ	11 34·421	15 46 6·29	3[2]	+17 +11
q	53 53·746	14 0 37·03	2	−28 − 5	μ	12 26·051	17 59 31·78	3	−26 + 3
r	55 25·563	10 34 58·41	4	− 9 + 8	C	17 2·111	10 47 13·80	2	+41 −54
s	55 32·825	11 18 50·44	3	+28 − 5	D	22 25·973	16 30 16·53	4	+ 3 +10

[1] Without 1889 November 13 (star extremely faint and wires discordant).
[2] R.A. w. 2½, October 14, 1889, only 3 wires observed.

The m. e. of one observation becomes—

for the refer. stars :	in R.A.	$\pm 0^s.053$;	in Dec. $\pm 0''.68$, from 41 obs.
„ comp. „	„	$0^s.051$	„ $0''.70$ „ 155 and 161 obs.

The accuracy appears to be the same for all of the stars, and the m. e. is to be assumed $= \pm 0^s.052 \pm 0''.69$.

LEIDEN.

Only the following few observations were made by Mr. E. F. van de Sande Bakhuyzen. They are made and reduced by him in the same manner as those of the *Victoria* stars. The instrument was in the position clamp E., and circle B was read.

Digitized by Google

Star	1889	R.A.	Dec.	Star	1889	R.A.	Dec.	Star	1889	R.A.	Dec.
		s	″			s	″			s	″
A	Sept. 18	31·965	31·75	g	Oct. 30	0·606	5·58	ζ	Oct. 30	10·234	12·94
	Oct. 30	32·013	32·10	h	Nov. 12	2·902	12·87	θ	Sept. 18	55·704	29·03
	Nov. 12	·014	33·06	i	Sept. 18	11·971	44·14	ι	Oct. 15	13·869	44·66
B	Sept. 18	4·282	22·12	k	Oct. 30	19·683	2·41		30	·892	45·15
	Oct. 15	·289	22·92	q	Sept. 18	53·740	38·47	λ	Oct. 30	34·365	7·79
	30	·247	22·81	r	Oct. 15	25·561	59·88	μ	Oct. 15	26·029	32·07
	Nov. 12	·277	23·41	s	Oct. 30	32·843	50·99	C	Sept. 18	2·139	12·82
a	Sept. 18	25·233	57·43	u	Sept. 18	9·636	26·86		Oct. 15	·184	12·95
	Nov. 12	·232	58·28	w	Oct. 15	0·525	26·94		30	·218	12·74
b	Oct. 15	30·994	11·57	x	Oct. 30	13·782	56·79	D	Sept. 18	25·970	16·00
d	Nov. 12	46·691	25·96	α	Sept. 18	59·532	14·61		Oct. 15	·962	16·58
e	Sept. 18	46·152	52·81	γ	Oct. 30	34·870	41·22		30	·962	16·23
e′	Oct. 13	20·376	52·27	ε	Oct. 15	3·787	6·17				

As the smallness of the number of observations is compensated to some extent by the high accuracy of the Leiden observations, shown by the *Iris* and *Victoria* series, it seemed desirable to investigate the possible systematic corrections even within this small series. Treating it like the others, the day corrections would be found :—

	s	″	
Sept. 18	$\Delta\alpha = +0{\cdot}012$	$\Delta\delta = +0{\cdot}38$	from 5 stars
Oct. 15	$-0{\cdot}001$	$-0{\cdot}07$	„ 4 „
30	$-0{\cdot}007$	$+0{\cdot}02$	„ 5 „
Nov. 12	$-0{\cdot}007$	$-0{\cdot}60$	„ 3 „

It is by no means probable that the two larger of these values were due to merely accidental error in the observations of these stars. That they indicate real corrections is fully corroborated by a comparison with provisional means from the Berlin and Cape places, which after allowing for a mean difference gave the corrections—

	s	″	
Sept. 18	$\Delta\alpha = +0{\cdot}013$	$\Delta\delta = +0{\cdot}48$	from 11 stars
Oct. 15	$-0{\cdot}007$	$+0{\cdot}06$	„ 9 „
30	$-0{\cdot}014$	$+0{\cdot}07$	„ 12 „
Nov. 12	$+0{\cdot}010$	$-0{\cdot}61$	„ 5 „

Except the two large values of $\Delta\delta$ these corrections might be regarded as accidental and neglected. It seemed less arbitrary, however, to make use of them all, the mean from the two determinations being adopted in every case.

The means for the stars observed more than once become after this reduction :—

Star	R.A. 1889·0	Dec. 1889·0	No. obs.	II — I	Star	R.A. 1889·0	Dec. 1889·0	No. obs.	II — I
	h m s	° ′ ″				h m s	° ′ ″		
A	0 31 31·998	+10 49 32·25	3	+ 1 — 5	ι	1 8 13·873	+15 32 44·93	2	— 7 + 3
B	37 4·273	16 3 22·78	4	0 — 3	C	17 2·180	10 47 13·00	3	0 +16
a	42 25·239	8 36 57·77	2	+ 7 — 9	D	22 25·964	16 30 16·43	3	— 1 +16

Digitized by Google

The mean error of one reduced observation becomes, from the 17 observations, in R.A. $\pm 0^s\cdot0236$, in Dec. $\pm 0''\cdot228$; the first number closely agrees with the values found from the other series, while the extreme smallness of the other is only an accidental consequence of the small number of observations. Without the day corrections the mean error would have been the same ($\pm 0^s\cdot0234$) in R.A., but $\pm 0''\cdot472$ in Dec.

LEIPZIG.

Observations were made by Dr. Schumann, with the assistance of Dr. Hänig, in the same manner as in the case of the *Victoria* stars. Eight stars of the Berlin fundamental catalogue were used, whose declinations were corrected, in the determination of the equator points, from the observations.

Mean Places 1889·0 of Reference Stars.

1889	Circle	A		B		C		D		Remarks
		$0^h\ 31^m$	$+10^\circ\ 49'$	$0^h\ 37^m$	$+16^\circ\ 3'$	$1^h\ 17^m$	$+10^\circ\ 47'$	$1^h\ 22^m$	$+16^\circ\ 30'$	
		s	"	s	"	s	"	s	"	
Sept. 8	W.	31·97	31·95	4·34	23·07	2·28	13·48	25·98	17·76	
9	W.	·98	31·75	·24	22·95	·23	13·58	·95	17·30	
10	W.	32·12	31·77	·39	23·41	·19	13·44	26·00	16·33	
11	W.	·13	31·61	·33	23·04	·22	13·09	25·96	16·99	A through clouds.
15	W.	·03	31·95	·28	22·77	·18	11·61	·98	16·11	
18	W.	·04	31·77	·31	22·80	...	...	...	...	
20	E.	·07	32·07	·34	23·24	·22	13·39	·97	16·49	
23	E.	·04	32·57	·34	23·52	·23	13·54	26·02	16·15	
Oct. 3	W.	·08	31·51	·32	23·21	·17	13·23	·00	17·48	
4	W.	·06	31·56	·26	22·89	·16	11·92	·00	16·61	
12	E.	·14	32·04	·41	23·45	·22	13·62	25·91	17·18	
15	E.	·03	32·64	·27	23·48	·24	13·76	·98	16·42	
16	E.	·12	32·86	·35	23·50	·17	13·94	·95	16·77	
20	E.	·07	31·86	·30	23·01	·24	13·38	·99	16·83	
23	E.	·11	32·25	·38	23·53	...	...	26·12	15·74	A through clouds.
27	W.	·11	31·56	·36	23·08	·22	12·39	25·99	15·36	
30	W.	·04	31·87	·32	23·12	·27	13·25	26·00	16·30	
Nov. 1	W	·09	31·98	·32	22·90	·24	13·05	25·95	17·09	
9	E.	·13	31·84	·35	23·31	·21	13·49	26·01	16·10	
12	E.	·10	32·78	·35	23·14	·25	12·83	25·99	16·19	
13	E.	·03	32·96	·31	22·74	·14	13·56	·96	16·40	
14	E.	·12	31·77	·31	23·03	·30	13·42	26·01	17·18	
15	W.	·00	32·07	·28	23·51	·26	12·38	·06	16·96	C and D faint, haze.

Digitized by Google

Observations of Comparison Stars.

1889	Circle	R.A.	Dec.
a		s	″
Sept. 10	W.	25·27	56·09
11	W.	·24	56·30
23	E.	·33	57·05
Oct. 3	W.	·21	56·67
4	W.	·23	56·58
15	E.	·16	57·84
Nov. 13	E.	·29	57·75
14	E.	·35	57·34
b			
Sept. 10	W.	31·10	11·30
Oct. 3	W.	·01	11·42
15	E.	·15	12·32
23	E.	·06	11·16
27	W.	·21	10·36
Nov. 13	E.	30·99	12·91
c			
Sept. 8	W.	24·30	36·12
9	W.	·42	35·40
10	W.	·39	35·57
11	W.	·39	35·49
Oct. 10	E.	·45	35·72
15	E.	·36	35·66
16	E.	·50	35·90
Nov. 12	E.	·46	35·82
d			
Sept. 10	W.	46·75	25·28
11	W.	·71	25·72
15	W.	·52	24·34
18	W.	·82	24·97
20	E.	·73	25·67
23	E.	·88	24·49
Oct. 3	W.	·70	24·10
23	E.	·70	25·28
Nov. 1	W.	·85	24·97
9	E.	·75	25·21
13	E.	·59	25·95
e		s	″
Sept. 8	W.	46·24	52·99
9	W.	·21	52·75
10	W.	·16	53·40
11	W.	·20	52·32
15	W.	·09	51·84
20	E.	·25	51·78
23	E.	·30	52·27
Oct. 3	W.	·20	51·92
4	W.	·16	53·13
12	E.	·15	52·19
15	E.	·22	52·01
16	E.	·27	51·73
Nov. 9	E.	·28	52·87
12	E.	·27	52·62
e′			
Sept. 11	W.	20·23	51·29
15	W.	·32	52·68
18	W.	·33	52·17
20	E.	·45	52·75
23	E.	·45	52·47
f			
Sept. 8	W.	40·08	45·10
9	W.	·11	44·39
Oct. 12	E.	·10	43·85
15	E.	·14	44·13
g			
Sept. 10	W.	0·73	5·57
15	W.	·74	4·48
20	E.	·67	5·32
23	E.	·79	5·55
Oct. 27	W.	·68	4·64
h		s	″
Sept. 8	W.	2·91	13·57
9	W.	·93	12·58
10	W.	3·01	11·94
11	W.	2·93	11·76
15	W.	·90	11·71
20	E.	3·01	13·29
23	E.	·06	12·71
Oct. 12	E.	·03	12·91
15	E.	2·95	14·19
16	E.	·91	13·29
27	W.	3·05	11·53
30	W.	2·97	11·45
i			
Sept. 8	W.	12·00	44·91
9	W.	·00	44·57
20	E.	·03	42·43
23	E.	·03	44·54
Oct. 27	W.	·09	43·97
k			
Sept. 8	W.	19·79	2·07
9	W.	·73	2·00
10	W.	·73	1·59
23	E.	·74	1·82
Oct. 12	E.	·68	2·34
23*	E.	·73	1·35
Nov. 9	E.	·76	1·60
l			
Sept. 11	W.	40·46	44·15
15	W.	·33	44·59
20	E.	·41	44·30
Oct. 12	E.	·47	44·52

* Through clouds.

Digitized by Google

1889	Circle	R.A.	Dec.
m		s	″
Sept. 8	W.	52·30	31·17
11	W.	·26	30·65
Nov. 9	E.	·35	30·09
12	E.	·31	29·46
n			
Sept. 10	W.	59·35	54·99
15	W.	·16	54·06
18	W.	·15	53·94
23	E.	·27	54·02
Oct. 3	W.	·30	54·17
27	W.	·27	53·63
Nov. 9	E.	·14	54·45
12	E.	·24	54·89
13	E.	·25	54·53
o			
Sept. 15	W.	32·95	47·69
20	E.	·94	46·15
Oct. 3	W.	33·04	45·35
4	W.	32·87	46·24
30	W.	·98	46·15
Nov. 9	E.	·90	46·67
13	E.	·99	46·31
14	E.	·93	46·07
p			
Sept. 9	W.	5·10	43·75
10	W.	·03	45·07
18	W.	·00	44·02
20	E.	·07	44·45
23	E.	·01	44·80
Oct. 3	W.	·08	45·01
4	W.	·01	43·79
16	E.	4·98	44·21
p—*cont.*			
Oct. 20	E.	5·02	44·55
23	E.	·07	45·84
27	W.	·14	43·98
30	W.	·04	44·72
Nov. 1	W.	·19	43·80
12	E.	·07	45·80
14	E.	·00	44·65
q			
Sept. 8	W.	53·70	38·05
10	W.	·72	38·13
20	E.	·72	38·19
23	E.	·78	38·70
r			
Sept. 8	W.	25·65	59·23
9	W.	·56	58·52
20	E.	·64	59·63
23	E.	·53	58·75
s			
Sept. 8	W.	32·99	52·33
9	W.	·85	51·14
10	W.	·86	50·15
11	W.	·86	51·15
20	E.	·98	51·10
23	E.	·83	51·21
Oct. 12	E.	·92	50·45
15	E.	·90	50·82
t			
Sept. 8	W.	43·65	19·04
9	W.	·41	18·41
10	W.	·50	17·95
11	W.	·50	18·64
15	W.	·38	18·34
20	E.	·57	17·31
23	E.	·61	18·73
t—*cont.*			
Oct. 12	E.	43·63	16·93
15	E.	·61	17·54
16	E.	·50	17·58
u			
Sept. 10	W.	9·73	25·91
11	W.	·67	27·35
15	W.	·68	26·38
20	E.	·71	27·11
Oct. 12	E.	·73	27·70
15	E.	·60	27·66
v			
Sept. 15	W.	16·24	10·67
18	W.	·31	10·68
23	E.	·48	10·41
Oct. 15	E.	·36	10·20
16	E.	·41	10·85
20	E.	·34	9·14
30	W.	·37	10·12
Nov. 1	W.	·45	11·46
9	E.	·40	10·18
12	E.	·42	10·54
15	W.	·44	10·34
w			
Sept. 9	W.	0·54	27·66
10	W.	·61	28·08
Oct. 12	E.	·69	25·96
16	E.	·73	27·86
x			
Sept. 9	W.	13·75	56·14
10	W.	·81	57·11
11	W.	·74	56·36
15	W.	·76	55·53
20	E.	·74	56·51
23	E.	·64	56·13

Digitized by Google

1889	Circle	R.A.	Dec.
x—*cont.*		s	″
Oct. 12	E.	13·80	55·85
15	E.	·76	55·93
16	E.	·81	55·99
20	E.	·72	56·23
30	W.	·80	56·68
Nov. 1	W.	·83	56·69
9	E.	·71	55·48
12	E.	·79	56·94
15	W.	·80	56·22
y*			
Sept. 10	W.	56·99	16·10
11	W.	57·02	15·66
18	W.	·02	15·74
20	E.	·03	15·41
23	E.	·10	15·34
Oct. 27	W.	·09	14·69
Nov. 9	E.	·03	15·19
13	E.	·02	14·95
15*	W.	·12	16·84
y			
Oct. 4	W.	4·47	23·81
15	E.	·41	23·74
16	E.	·36	23·89
20	E.	·32	23·67
23†	E.	·47	23·93
30	W.	·34	24·20
Nov. 1	W.	·32	24·09
12	E.	·37	24·81
z			
Sept. 8	W.	29·58	12·14
9	W.	·60	11·13
20	E.	·64	10·89
23	E.	·55	11·02

1889	Circle	R.A.	Dec.
α		s	″
Sept. 10	W.	59·54	15·88
11	W.	·56	14·59
15	W.	·60	14·47
20	E.	·56	15·21
23	E.	·53	15·70
Oct. 3	W.	·49	15·94
4	W.	·61	15·33
12	E.	·56	14·81
15	E.	·51	14·74
16	E.	·48	15·66
β			
Sept. 8	W.	2·15	12·25
9	W.	·08	11·98
Oct. 15	E.	·20	11·23
23†	E.	·24	11·41
Nov. 9	E.	·15	10·99
γ			
Sept. 9	W.	34·87	42·60
10	W.	·87	41·40
11	W.	·84	41·78
15	W.	·91	42·12
20	E.	·86	41·32
Oct. 12	E.	·93	38·82
20	E.	·91	41·25
Nov. 9	E.	·90	41·80
δ			
Sept. 8	W.	18·40	60·22
9	W.	·23	59·87
20	E.	·30	59·14
Oct. 12	E.	·33	58·78

1889	Circle	R.A.	Dec.
ε		s	″
Sept. 8	W.	3·80	8·11
9	W.	·78	6·99
Oct. 12	E.	·89	6·99
15	E.	·85	7·48
ζ			
Sept. 10	W.	10·23	12·18
11	W.	·24	12·46
15	W.	·23	10·73
18	W.	·23	11·12
23	E.	·24	13·27
Oct. 3	W.	·14	13·10
15	E.	·21	13·63
16	E.	·20	13·15
20	E.	·20	12·57
23	E.	·12	11·91
27	W.	·29	12·14
Nov. 9	E.	·22	11·93
η			
Sept. 10	W.	24·14	5·20
11	W.	·03	6·21
15	W.	23·99	4·31
Oct. 3	W.	24·09	5·42
12	E.	·06	5·69
16	E.	·12	6·13
Nov. 9	E.	·06	5·62
12	E.	·09	5·76
13	E.	·10	4·79
θ			
Sept. 9	W.	55·77	30·48
10	W.	·83	29·66
23	E.	·84	30·36
Oct. 12	E.	·78	30·27

* Faint, haze. † Through clouds.

Digitized by Google

1889	Circle	R.A.	Dec.	1889	Circle	R.A.	Dec.	1889	Circle	R.A.	Dec
ι		s	″	κ—*cont.*		s	″	λ—*cont.*		s	″
Sept. 23	E.	13·85	45·19	Oct. 12	E.	15·84	53·16	Oct. 3	W.	34·38	8·60
Oct. 3	W.	·83	45·30	15	E.	·84	53·65	12	E.	·44	7·20
4	W.	·81	44·40	27	W.	·85	53·30	27	W.	·32	7·92
12	E.	·82	45·37	30	W.	·74	54·14				
15	E.	·89	44·74	Nov. 15*	W.	·90	53·99				
27	W.	·84	45·03					μ			
								Sept. 10	W.	26·06	32·49
								11	W.	·10	32·06
κ				λ				15	W.	·01	32·26
Sept. 20	E.	15·86	53·30	Sept. 15	W.	34·36	7·35	20	E.	·03	31·76
23	E.	·83	54·44	18	W.	·35	7·21	23	E.	25·95	32·60
Oct. 3	W.	·78	54·28	20	E.	·32	7·83	Oct. 12	E.	26·11	33·14
4	W.	·79	53·16	23	E.	·35	9·27	Nov. 9	E.	·09	31·21

* Faint, haze.

Separate means were taken for the two positions of the instrument, from which the mean difference was found—

$$\text{E.} - \text{W.} \quad \Delta\alpha = +0^{s}\cdot016 \quad \Delta\delta = +0''\cdot12 \quad \text{w.} = 93\cdot1 \text{ obs.}$$

Reducing then the observations to $\frac{1}{2}$(E. + W.) whenever an unequal number of these was obtained in the two positions, general means were taken for the 43 stars, and day corrections determined from all of them without distinction. Greater weight should have been given to the reference stars, because they were observed generally over the double number of wires, and twice pointed at for declination, but generally the accordance is so close, and the number of stars observed in one zone is so great, that no material change in the mean correction would arise. The following are the adopted values—

1889	Δα	Δδ	Stars	1889	Δα	Δδ	Stars	1889	Δα	Δδ	Stars
	s	″			s	″			s	″	
Sept. 8	0·00	− 0·54	19	Oct. 3	+ 0·02	− 0·09	17	Oct. 30	0·00	+ 0·06	11
9	+ 0·04	− 0·12	22	4	+ 0·02	+ 0·44	12	Nov. 1	− 0·03	− 0·06	9
10	− 0·01	0·00	27	12	− 0·02	+ 0·12	25	9	− 0·01	+ 0·12	18
11	+ 0·01	+ 0·01	22	15	+ 0·01	+ 0·09	22	12	− 0·02	− 0·20	13
15	+ 0·04	+ 0·40	22	16	− 0·01	− 0·30	16	13	+ 0·02	− 0·25	11
18	+ 0·02	+ 0·13	10	20	+ 0·01	+ 0·10	10	14	− 0·03	− 0·11	7
20	− 0·01	+ 0·07	27	23	− 0·04	+ 0·03	10	15	− 0·02	− 0·07	8
23	− 0·02	− 0·05	29	27	− 0·03	+ 0·55	15				

Digitized by Google

The mean of the reduced observations, and the corrections of the means used in the determination of day corrections, expressed in $0^{s}\cdot001$ and $0''\cdot00$, are the following :—

Star	R.A. 1889·0.	Dec. 1889·0	No. obs.	II − I	Star	R.A. 1889·0.	Dec. 1889·0	No. obs.	II − I
	h m s	° ′ ″				h m s	° ′ ″		
A	0 31 32·068	+10 49 32·06	23	− 2 + 1	u	0 57 9·690	+15 32 27·13	6	+ 4 +11
B	37 4·322	16 3 23·17	23	− 2 + 3	v	57 16·381	12 27 10·44	11	− 2 + 3
a	42 25·263	8 36 56·96	8	+ 8 +11	w	58 0·643	13 20 27·32	4	+ 1 − 7
b	42 31·082	9 39 11·64	6	−26 +33	x	59 13·761	14 20 56·27	15	− 2 + 2
c	44 24·409	11 13 35·60	8	0 −10	y*	59 57·041	14 23 15·60	9	− 7 + 5
d	44 46·726	9 48 25·12	11	− 2 + 2	y	1 0 4·375	14 47 24·04	8	− 6 + 2
e	45 46·217	12 10 52·41	14	+ 2 0	z	0 29·595	15 43 11·14	4	+ 3 −16
e′	46 20·364	9 59 52·38	5	+ 7 + 9	α	1 59·547	15 16 15·30	10	+ 3 + 6
f	46 40·115	13 2 44·25	4	+ 8 −12	β	2 2·164	16 49 11·49	5	+ 1 − 7
g	47 0·716	9 12 5·22	5	−17 − 1	γ	2 34·892	17 3 41·46	8	+ 6 + 6
h	48 2·972	10 31 12·60	12	− 1 + 1	δ	4 18·317	15 4 59·38	4	+ 2 −12
i	49 12·026	12 14 44·06	5	− 6 − 3	ε	5 3·837	17 48 7·28	4	+ 7 −11
k	50 19·729	13 21 1·76	7	− 7 − 6	ζ	5 10·212	16 11 12·43	12	+ 4 + 8
l	50 40·422	12 6 44·54	4	+ 5 +15	η	5 24·077	14 6 5·43	9	+ 3 − 2
m	50 52·300	14 10 30·19	4	− 5 −15	θ	6 55·802	16 10 30·18	4	− 3 − 1
n	50 59·238	9 24 54·37	9	0 + 7	ι	8 13·837	15 32 45·18	6	− 3 +18
o	51 32·956	11 49 46·41	8	+ 6 + 8	κ	10 15·820	17 2 53·84	9	− 4 +14
p	52 5·048	13 5 44·59	15	− 6 + 2	λ	11 34·360	15 46 8·07	7	− 1 +15
q	53 53·720	14 0 38·14	4	−10 −13	μ	12 26·047	17 59 32·31	7	− 2 +10
r	55 25·597	10 34 58·87	4	+ 2 −16	C	17 2·219	10 47 13·16	21	+10 0
s	55 32·906	11 18 50·99	8	+ 7 − 5	D	22 25·986	16 30 16·64	22	− 6 + 2
t	56 43·539	13 39 18·01	10	+ 3 − 4					

Some of the larger differences II − I are due to the fact that one observation of each of the following stars, viz. : **a, b, g, C, D**, had been overlooked in forming the first means.

The m. e. of the reduced observations is found—

from 89 obs. of the refer. stars :	in R.A.	$\pm$ 0·040 ;	in Dec. $\pm$ 0·44
„ 293 „ comp. „	„	0·057	„ 0·61

For the reason mentioned above, the two groups here must be kept separated. Besides, however, the diminution of accuracy with diminishing brightness is quite perceptible in the series, for the m. e. for the comparison stars is found—

from 68 obs. of the 7 brightest stars	$\pm$ 0·051	$\pm$ 0·52
from the remaining 225 obs., mag. 7·7 and less	0·059	0·63

Digitized by Google

MELBOURNE.

Observations were made by the same three assistants who had observed, besides Mr. White, the *Victoria* stars.

The following mean places 1889·0 were communicated by Mr. Ellery.

Observations of Reference Stars.

1889	Observer	A		B		C		D		Day Corrections	
		$0^h\ 31^m$	$+10°\ 49'$	$0^h\ 37^m$	$+16°\ 3'$	$1^h\ 17^m$	$+10°\ 47'$	$1^h\ 22^m$	$+16°\ 30'$	$\Delta\alpha$	$\Delta\delta$
		s	"	s	"	s	"	s	"	s	"
Sept. 16	I	31·93	33·10	4·35	25·80	2·16	14·99	25·93	18·79	0·00	−0·37
17	P	...	...	...	...	·17	14·97	·86	18·07	...	
19	I	32·01	34·88	·25	25·66	·22	16·07	26·10	19·12	−0·05·	−1·13
20	P	·08	33·93	·30	24·36	·18	14·70	25·96	17·31	−0·04	+0·22
21	S	...	32·87	...	23·30	·12	14·57	...	...		+0·77
22	S	...	34·55	...	24·77	...	...	...	...	...	
24	S	·07	34·24	·24	24·52	·19	14·54	·93	17·51	−0·02	+0·07
28	I	31·99	33·70	·27	24·57	·20	15·05	·88	18·09	+0·00·	−0·05
30	S	...	33·80	...	24·62	...	...	...	...	...	
Oct. 1	I	·98	34·97	·28	26·21	·13	15·73	·82	18·83	+0·04	−1·13
2	P	·96	34·28	·20	25·15	·17	15·50	·97	18·66	+0·01·	−0·60
3	I	32·04	33·96	·29	24·88	·17	15·50	·94	20·68	−0·02	−0·95
5	I	·06	34·05	·30	24·77	·25	15·18	·95	18·56	−0·05	−0·34
7	P	·02	33·61	·32	24·10	·12	14·93	·87	19·16	+0·01	−0·15
10	S	31·94	33·35	·27	23·64	...	...	·93	17·23	+0·02	+0·75
11	P	·95	34·36	·28	25·35	·18	13·60	·98	18·46	−0·01	−0·14
12	S	·96	33·02	·19	23·64	·09	13·10	·86	17·15	+0·06·	+1·07
14	P	32·01	33·61	...	...	...	...	...	...	...	
20	I	·09	33·95	·32	24·81	·20	15·41	·93	17·29	−0·04·	−0·06
21	S	·10	33·86	·28	24·79	·23	15·36	26·07	18·37	−0·08	−0·29
31	S	31·86	34·27	·04	26·29	·10	14·87	25·94	17·94	+0·10	−0·29
Nov. 1	P	32·03	34·15	·27	24·73	·22	14·82	·97	18·38	−0·03	−0·22
2	I	31·99	34·82	·19	25·20	·16	15·96	·94	19·19	+0·02	−0·99
4	P	32·01	32·85	...	...	·09	14·64	·89	18·25	+0·04	+0·32
6	P	·04	32·90	·22	23·42	·08	14·26	·88	17·82	+0·03·	+0·70
8	I	·13	33·87	·34	24·07	·15	13·79	·98	17·20	−0·06	+0·76
11	S	·10	33·46	·26	23·71	·21	14·18	·99	16·29	−0·05	+0·89
12	I	31·97	34·43	·21	24·46	·17	15·10	·95	18·27	+0·01·	−0·26
13	P	·99	32·46	·17	22·55	·11	14·60	·92	16·95	+0·04	+1·16
15	S	...	...	·20	23·33	·09	13·58	·96	17·51		+0·98
19	I	32·03	33·63	·21	24·44	·14	15·71	·92	21·26	+0·01·	−0·96
21	I	31·96	33·75	·24	22·91	·15	13·67	·94	17·60	+0·02	+0·82

Digitized by Google

Observations of Comparison Stars.

1889	R.A.	Dec.
a	s	″
Sept. 16	25·25	58·47
19	·22	59·59
20	·21	58·40
21	·22	58·09
22	...	58·54*
24	·23	[54·51]
b		
Sept. 28	30·96	12·76
30	...	13·00
Oct. 2	·93	14·29
3	·97	12·88
c		
Nov. 13	24·35	36·25
15	·27*	36·37*
19	·29	37·51
21	·25	35·88
d		
Oct. 14	46·70	26·33
Nov. 2	·71	27·37
6	·60	25·48
8	·74	25·49
11	·77	26·00
12	·64	...
13	...	25·25
e		
Sept. 16	46·27	53·97
19	·20	53·77
20	·19	53·56
21	·13	52·91
22	...	54·00
24	·20	54·20
28	·13	53·15
30	...	54·52
Oct. 1	·26	54·41
2	·13	53·98
e′		
Oct. 3	20·30	54·52
5	·40	54·49
10	·32	52·65
11	·32*	53·81*
12	·28	52·96
f		
Oct. 20	40·03	44·66
31	·05	46·40
Nov. 1	·12	45·61

1889	R.A.	Dec.
g	s	″
Nov. 12	0·65	6·50
13	·50	5·72
15	·61	5·80
h		
Oct. 21	2·90	...
Nov. 1	·92	13·71
2	·93	13·66
6	·89	12·77
8	·90*	13·37*
11	·98	11·31
i		
Sept. 16	12·00	46·63
19	11·96	47·40
20	12·03	45·98
k		
Sept. 21	19·68	...
22	...	4·95
24	·66	3·71
28	·74	3·01
30	...	3·37
Oct. 1	·63	4·15
l		
Oct. 2	40·26	46·46
3	·32	46·76
5	·38	46·25
m		
Nov. 12	52·22	31·42
13	·30	30·50
15	·25	29·88
n		
Nov. 4	59·16	56·16
6	·06	55·04
8	·17	55·39
11	·14	54·46
o		
Oct. 21	32·90	47·50
31	·84*	48·40*
Nov. 1	·91	47·64
2	·89	48·90

1889	R.A.	Dec.
p	s	″
Sept. 16	5·10	45·70
19	·02	47·94
20	·12	45·78
Oct. 7	·02*	46·53*
10	·04	45·04
11	4·96	45·44
12	·95	44·91
q		
Sept. 21	53·66*	38·78*
22	...	41·07*
24	·70*	41·05*
28	·71	39·04
Oct. 2	·74	39·91
r		
Nov. 2	25·64	2·04
4	·57	0·99
6	·50	0·16
s		
Oct. 11	32·79	51·26
12	·76	51·50
14	·82	52·29
21	·93	52·39
31	·80*	52·82*
t		
Sept. 16	43·49	19·53
19	·51	21·22
20	·57	19·55
21	·49*	17·30*
24	·46*	18·72*
28	·53	20·13
u		
Nov. 1	9·61	28·62
8	·72	28·00
11	·67	27·00
v		
Oct. 1	16·35	13·62
2	·31	12·55
3	·34	12·94
10	·34	11·72
w		
Nov. 12	0·47	29·55
13	·43	27·56
15	·50	27·12

1889	R.A.	Dec.
x	s	″
Sept. 22	...	57·86
Oct. 11	13·65	57·42
12	·66	56·75
20	·74	58·77
21	·80	58·41
31	·66	58·70
Nov. 1	·77	57·48
2	·72	58·45
y*		
Nov. 4	56·96	17·59
6	·97	16·10
8	57·04	17·14
11	·00	15·58*
12	·13	17·10
z		
Sept. 16	29·56	11·96
17	·51	12·94
20	·69·	11·41
α		
Sept. 21	59·49*	16·90
24	·52	16·50
28	·52	...
Oct. 5	·51	16·81
10	·50	15·10
11	·63*	16·70*
12	·48	15·72
β		
Oct. 20	2·20	12·75
21	·15	12·36
31	·06*	11·70*
γ		
Nov. 1	34·82	42·54
2	·95	42·97
4	·81	42·25
6	·76	41·57
δ		
Sept. 16	18·37	0·07
17	·25	0·17
19	·21	1·06

1889	R.A.	Dec.
ε	s	″
Sept. 20	3·85	8·26
Oct. 21	...	8·81*
31	·82*	7·67*
Nov. 2	·75	8·24
ζ		
Nov. 4	10·10	13·08
6	·00	12·27
8	·18	13·74
11	·18	12·68
12	·18	13·01
η		
Oct. 1	23·98	7·44
2	·98	8·10
3	24·03	7·32
12	23·93	5·84
θ		
Nov. 4	55·78	30·68
6	·73	29·80
11	·76	30·49
ι		
Sept. 24	13·87	
28	·85	46·4
Oct. 3	·80	...
5	·82	48·11
12	·76	44·54
κ		
Oct. 2	15·76	55·06
5	·74	54·98
7	·73	54·52*
12	·62*	54·65*
λ		
Sept. 20	34·38	9·23
24	34·40*	8·21*
Oct. 1	·35	10·52
μ		
Sept. 16	26·02	33·56
17	25·99	32·85
19	26·20	34·21

Digitized by Google

An asterisk signifies those observations to which an estimated weight less than 3 was given by the observer. The results thus marked have been used with half weight, while the other estimates of weights were disregarded, as in the other Melbourne series.

For the reference stars the means of the observed places become for the different observers :

Obs.	A			B			C			D		
	s	″		s	″		s	′		s	′	
I	32·015	34·09	12	4·271	24·81·	12	2·175	15·18	12	25·940	18·74	12
P	·010	33·79	9	·251	24·26	7	·147	14·67	9	·922	18·12	9
S	·005	33·72	6, 9	·211	24·29	7, 10	·147	14·31	7	·954	17·43	7
⅓ (I + P + S)	32·010	33·87		4·244	24·45·		2·156	14·72		25·939	18·10	

The mean difference from the means given in the last line is—

		s	′
For I	$\Delta\alpha$	+ 0·013	$\Delta\delta$ = + 0·42
P		− 0·005	− 0·08
S		− 0·008	− 0·35

All of these values agree quite closely with the corresponding values found from the *Victoria* series. They are to be considered, therefore, as well established personalities, and must be taken into account in forming the means. Reduced to mean of the three observers, and with w. 1 for each observation, these become—

$32^s{\cdot}009$ $33''{\cdot}85$; $4^s{\cdot}247$ $24''{\cdot}47$; $2^s{\cdot}157$ $14''{\cdot}73$; $25^s{\cdot}936$ $18''{\cdot}15$.

These means (the R.A. abridged to $0^s{\cdot}01$) have been used to determine day corrections, including personal equation, which strictly however holds good only for the mean magnitude of the reference stars = 7·2, from these stars. These corrections are given in the first part of the preceding table. No values are inserted when they would depend upon observations of less than three of the stars ; in these cases the following corrections were used, which are means from the observer's general reduction and that found from the reference stars observed on the day :—

	s	′		s	′
Sept. 17	$\Delta\alpha$ = + 0·03	$\Delta\delta$ = − 0·03	Sept. 30		$\Delta\delta$ = + 0·09
21	+ 0·02		Oct. 14	$\Delta\alpha$ = + 0·01	+ 0·16
22		− 0·21	Nov. 15	+ 0·02	

Digitized by Google

Mean Results of the Reduced Observations.

Star	R.A. 1889·0	Dec. 1889·0	No. obs.	Star	R.A. 1889·0	Dec. 1889·0	No. obs.	Star	R.A. 1889·0	Dec. 1889·0	No. obs.
	h m s	° ′ ″			h m s	° ′ ″			h m s	° ′ ″	
A	0 31 32·011	+10 49 33·81	27, 30	m	0 50 52·282	+14 10 31·23	3	α	1 1 59·519	+15 16 16·66	7, 6
B	37 4·248	16 3 24·49	26, 29	n	50 59·124	9 24 55·93	4	β	2 2·130	16 49 12·06	3
a	42 25·207	8 36 58·49	5	o	51 32·881	11 49 47·60	4	γ	2 34·851	17 3 42·29	4
b	42 30·953	9 39 12·86	3, 4	p	52 5·028	13 5 45·91	7	δ	4 18·262	15 4 59·92	3
c	44 24·317	11 13 36·95	4	q	53 53·717	14 0 39·73	4, 5	ϵ	5 3·817	17 48 7·89	3, 4
d	44 46·688	9 48 26·43	6	r	55 25·602	10 35 1·07	3	ζ	5 10·124	16 11 13·44	5
e	45 46·184	12 10 53·61	8, 10	s	55 32·831	11 18 52·11	5	η	5 24·005	14 6 6·77	4
e′	46 20·327	9 59 53·77	5	t	56 43·497	13 39 19·51	6	θ	6 55·767	16 10 30·96	3
f	46 40·077	13 2 45·37	3	u	57 9·620	15 32 28·35	3	ι	8 13·816	15 32 46·58	5, 3
g	47 0·612	9 12 6·63	3	v	57 16·349	12 27 12·22	4	κ	10 15·728	17 2 54·72	4
h	48 2·897	10 31 13·09	6, 5	w	58 0·492	13 20 28·70	3	λ	11 34·368	15 46 9·07	3
i	49 11·958	12 14 46·24	3	x	59 13·718	14 20 57·84	7, 8	μ	12 26·062	17 59 33·03	3
k	50 19·689	13 21 3·59	4, 5	y*	59 57·016	14 23 17·26	5	C	17 2·160	10 47 14·79	28
l	50 40·302	12 6 45·86	3	z	1 0 29·585	15 43 12·04	3	D	22 25·939	16 30 18·20	28

The m. e. of a reduced observation is found—

from the refer. stars : in R.A. $\pm$ 0^s·046 (109 obs.) ; in Dec. $\pm$ 0″·60 (115 obs.).
„ comp. „ „ 0·051 (161 obs.) „ 0·54 (164 obs.).

The latter values refer to an observation of full weight ; if no allowance were made for the diminished weights of the 16 Right Ascensions and the 20 Declinations marked with an asterisk, the values $\pm 0^s·053$ and $\pm 0''·58$ would have been found. It appears that all of the stars were observed with the same accuracy (m. e. $\pm 0^s·049$, $\pm 0''·56$ for weight 1) as might be expected with the powerful telescope employed.

OXFORD.

Three observations of each of 32 of the *Sappho* comparison stars were made at the Radcliffe Observatory during the years 1889—1892 by the same three observers who observed the *Iris* and *Victoria* stars, unequally however distributed among them, as out of the total of 96, 56 observations were made by Mr. Robinson, 25 by Mr. Wickham, and only 15 by Mr. Bellamy. It seems unnecessary to give here the individual results as derived at Oxford, as they will be published in the annual Radcliffe volumes. The means, taken from them and communicated by Mr. Stone, were but slightly changed in the second approximation ; the 96 observations being scattered over no less than 48 days and not checked by the reference stars, not much would be gained by applying day corrections. Such were assumed as furnished by the observations compared with their first means, whenever 4 stars (5 in one instance) had been observed. When the number was 3, a mean was taken from the day's result and the observer's general mean reduction, with double weight for the former ; and

Digitized by Google

when the number was 2, a similar mean was taken with double weight for the general reduction. The following are the values of the day corrections thus obtained and adopted :—

1889		Δα	Δδ	St.	1889		Δα	Δδ	St.	1892		Δα	Δδ	St.
		s	″				s	″				s	″	
Sept.	10	− 0·031	+ 0·24	3	Oct.	29	+ 0·023	− 0·13	3	Jan.	1	− 0·017	− 0·07	3
	18	− 0·009	+ 0·13	2		31	− 0·019	− 0·24	5	Aug.	10	+ 0·001	...	2
	20	+ 0·017	+ 0·56	3	Nov.	1	+ 0·015	+ 0·16	2	Sept.	8	− 0·017	+ 0·01	3
	25	− 0·005	+ 0·15	4		12	+ 0·007	− 0·11	4		13	+ 0·037	+ 0·11	2
	28	− 0·011	+ 0·29	2	1890						28	+ 0·036	+ 0·04	3
Oct.	3	+ 0·042	− 0·67	4	Sept.	16	+ 0·018	− 0·08	2	Oct.	5	+ 0·005	+ 0·21	3
	5	− 0·019	− 0·11	3	Dec.	6	+ 0·012	− 0·53	2		25	+ 0·021	+ 0·20	2
	7	− 0·018	− 0·07	4	1891					Dec.	12	− 0·010	+ 0·35	2
	9	− 0·055	+ 0·40	3	Dec.	11	+ 0·021	+ 0·34	3					
						31	+ 0·019	− 0·12	4					

For the remaining days, the general means found for the three observers were applied, viz., for—

	s	″
Observer R.	+ 0·002	+ 0·06
„ W.	0·000	+ 0·11
„ FB.	+ 0·014	− 0·30

The means of the reduced observations, and the differences from the first means (expressed in 0ˢ·001 and 0″·01 resp.) are contained in the following table :—

Star	R.A. 1889·0	Dec. 1889·0	II − I	Star	R.A. 1889·0	Dec. 1889·0	II − I
	h m s	° ′ ″			h m s	° ′ ″	
a	0 42 25·282	+ 8 36 57·30	+ 2 +14	s	0 55 32·851	+11 18 50·94	+11 −10
b	42 30·993	9 39 11·73	+ 3 −11	u	57 9·747	15 32 27·60	− 3 − 9
c	44 24·368	11 13 35·92	−12 −14	v	57 16·403	12 27 10·21	+ 3 + 3
d	44 46·723	9 48 24·96	+13 −32	w	58 0·484	13 20 27·33	− 6 + 5
e	45 46·141	12 10 52·09	+ 1 + 8	x	59 13·789	14 20 56·66	−11 − 2
e′	46 20·395	9 59 52·44	+ 5 −15	y*	59 57·024	14 23 15·87	+ 4 − 1
f	46 40·058	13 2 43·93	+ 8 + 2	z	1 0 29·633	15 43 11·20	+ 3 + 9
g	47 0·634	9 12 4·52*	+ 4 −86	α	1 59·578	15 16 15·17	+18 −14
h	48 2·943	10 31 12·50	+18 +26	β	2 2·177	16 49 11·08	+ 7 + 3
i	49 11·951	12 14 45·16	+ 1 +14	γ	2 34·907	17 3 41·62	− 3 −11
k	50 19·751	13 21 2·13	+ 1 + 6	δ	4 18·380	15 4 59·06	+10 −22
l	50 40·426	12 6 44·45	−14 +10	ε	5 3·955	17 48 6·96	−15 +12
o	51 32·937	11 49 46·15	+ 2 + 3	ι	8 13·940	15 32 45·26	0 − 6
p	52 5·021	13 5 44·57	+ 1 −17	κ	10 15·832	17 2 54·01	−18 +12
q	53 53·750	14 0 38·21	+10 +32	λ	11 34·357	15 46 7·90	+17 + 3
r	55 25·625	10 34 58·78	+ 5 + 8	μ	12 26·098	17 59 32·05	+18 −20

* Two observations only used for Dec.

Digitized by Google

The observations for Declination generally agree very well with each other, the largest difference between any two observations of 30 stars being 1″·24. Exceptions are presented, however, by two stars: **a** with the individual results 56″·13, 57″·05, 58″·73, and **g** with the results 4″·49, 4″·55, 7″·78. The last of these values, resulting from the observation of 1892 August 10, in which the star was noted "faint and diffused," was rejected.

The m. e. of a reduced observation was found: in R.A. ±0ˢ·065 from 96 obs., in Dec. ±0″·60 from 95 obs. Star **a** participates with 3·48 in the sum = 15·79 of the squares in Dec.; all the other 31 stars would make the m. e. = ±0″·54.

PULKOWA.

The stars were observed by Hr. Romberg with the Repsold Meridian-Circle, and referred to five stars selected from the *Berliner Jahrbuch*; two other stars were used occasionally when one of the five stars happened to interfere with the observation of one of the *Sappho* stars. The observer was much more satisfied with the observations than in the *Victoria* series, the condition of the images generally being much better. The instrument again seems to have been kept in the same position throughout the series.

Observed Mean Places 1889·0 of Reference Stars.

1889	A		B		C		D		Day Corrections	
	0ʰ 31ᵐ	+10° 49′	0ʰ 37ᵐ	+16° 3′	1ʰ 17ᵐ	+10° 47′	1ʰ 22ᵐ	+16° 30′	Δα	Δδ
	ˢ	″	ˢ		ˢ	″	ˢ	″	ˢ	″
Sept. 17	31·97	31·8	4·27	22·1	2·15	12·7	25·87	15·8	+ 0·05	+ 0·3
18	32·09	31·3	·22	22·4	·13	12·4	26·02	16·3	0·00	+ 0·3
22	·14	31·9	·20	22·3	·24	12·9	25·95	16·2	— 0·02	+ 0·1
24	·08	32·0	·26	22·6	·15	13·0	·97	16·3	0·00	0·0
25	...	...	...	...	·16	13·1	·75	16·5	[+ 0·08	— 0·1]
28	31·95	32·0	·23	23·4	·01	13·5	·83	16·6	+ 0·11	— 0·4
29	32·05	31·6	·40	22·6	...	...	...	...	[— 0·04	+ 0·1]
30	...	...	·39	22·9	·27	13·4	26·02	16·7	— 0·11	— 0·4
Oct. 2	·07	32·6	·45	22·6	·20	13·3	25·98	17·0	— 0·06	— 0·4
3	·02	32·2	·37	22·6	·16	13·0	·90	16·5	0·00	— 0·1
4	·08	32·0	·21	22·5	·18	12·7	·99	16·7	0·00	0·0
5	·12	32·9	·19	22·2	·10	13·1	·80	16·6	+ 0·06	— 0·2
9	·10	31·8	·19	22·1	·07	12·5	·82	15·3	+ 0·07	+ 0·5
14	·19	31·7	·26	22·2	·20	13·2	26·00	16·6	— 0·05	0·0
17	·16	31·0	·28	23·1	·25	13·1	·05	15·7	— 0·07	+ 0·2
23	·04	32·3	·38	22·4	·20	13·3	25·99	16·7	— 0·04	— 0·2
24	31·97	31·1	·24	22·3	...	...	...	...	[+ 0·08	+ 0·5]
25	...	...	·28	22·9	·13	13·9	·81	16·2	+ 0·04	— 0·4
27	32·30	30·8	·34	22·1	·38	14·1	·91	16·4	— 0·07	+ 0·1
Nov. 21	·24	32·5	·42	23·4	...	...	...	...	[— 0·14	— 0·7]

Digitized by Google

Observed Mean Places 1889·0 of Comparison Stars.

1889	R.A.	Dec.	1889	R.A.	Dec.	1889	R.A.	Dec.	1889	R.A.	Dec.	1889	R.A.	Dec.
a	s	″	h	s	″	q	s	″	y*	s	″	η	s	″
Sept. 17	25·23	57·8	Sept. 24	2·95	13·0	Sept. 18	53·71	37·5	Oct. 14	56·98	14·2	Oct. 4	23·88	5·2
22	·20	56·9	25	3·05	11·8	Oct. 2	·70	38·5				27	24·02	5·1
28	·07	57·6	29	2·87	11·0	5	·74	38·0	y			Nov. 21	·14	5·0
30	·28	56·8	Oct. 3	·85	11·1	25	·66	36·9	Oct. 24	4·19	22·5			
Oct. 9	·15	54·7	4	·77	12·4				25	·38	24·0			
24	·17	57·0				r						θ		
25	·08	56·3	i			Sept. 17	25·58	57·8	z			Oct. 2	55·67	29·6
27	·32	56·1	Sept. 18	12·04	44·3	24	·61	58·7	Sept. 18	29·68	8·1	3	·81	29·1
			22	·00	44·5	Oct. 23	·54	58·6				23	·63	28·9
b			Oct. 14	·06	43·7	24	·44	60·3						
Sept. 18	31·07	10·8	27	·12	43·0				α					
24	·24	10·8				s			Sept. 17	59·44	14·9	ι		
Oct. 14	·16	11·0	k			Sept. 22	32·79	50·0	24	·44	14·3	Sept. 25	13·82	45·4
23	·07	11·2	Sept. 28	19·52	1·4	25	·85	49·2	25	·37	15·8	28	·60	44·8
c			Oct. 5	·57	1·7	28	·75	50·7	Oct. 5	·26	14·3	30	·83	45·0
Sept. 25	24·36	34·6	17	·70	2·6	Oct. 3	·79	49·8	27	·50	15·6	Oct. 9	·71	43·9
30	·18	35·1	25	·62	2·1	27	·91	49·9				14	·88	44·3
Oct. 2	·39	35·4				Nov. 21	·95	51·1				17	·75	45·1
5	·24	35·7	l						β					
			Oct. 2	40·36	43·6	t			Sept. 22	2·05	9·6			
d			3	·32	43·9	Oct. 14	43·54	15·9	Oct. 9	·02	9·0	κ		
Sept. 17	46·60	24·5				25	·44	17·1	23	·09	10·2	Sept. 22	15·99	53·4
24	·69	24·0	m									Oct. 3	·67	52·6
Oct. 4	·54	25·2				u			γ			4	·71	52·7
9	·75	24·1	Oct. 23	52·20	29·8	Oct. 2	9·56	27·4				17	·83	52·6
14	·78	25·0	Nov. 21	·31	29·2				Oct. 4	34·65	41·4	25	·82	55·0
			n			v			Nov. 21	·92	41·0	27	·72	53·1
e			Sept. 17	59·04	53·3	Sept. 18	16·30	9·4				Nov. 21	·78	53·9
Sept. 18	46·15	52·4	24	·27	54·0	29	·31	9·3	δ					
22	·25	52·6				30	·41	10·5	Sept. 18	18·33	57·3	λ		
28	·04	52·0	o						30	·42	58·1			
Oct. 3	·23	52·2	Sept. 18	32·77	45·8	w			Oct. 14	·44	57·9	Sept. 24	34·32	7·0
17	·26	52·9	29	·92	46·2	Sept. 17	0·48	25·4	17	·27	58·3	28	·18	7·5
Nov. 21	·32	52·8	Oct. 24	·75	45·2	Oct. 9	·42	25·6				Oct. 2	·34	7·7
						27	·40	27·2				23	·22	6·8
e′			p						ε					
Oct. 2	20·40	53·1				x			Sept. 17	3·83	6·2			
24	·22	50·6	Sept. 22	4·97	43·5				Oct. 25	·92	5·1	μ		
			25	·96	43·9	Sept. 22	13·72	56·3				Sept. 18	26·03	31·2
f			28	·92	43·6	24	·67	56·4	ζ			25	·14	31·5
Sept. 30	39·96	42·7	30	5·02	44·5	25	·63	56·0				30	·08	31·4
Oct. 9	·96	42·6	Oct. 4	4·90	44·4	28	·55	56·1	Oct. 2	10·18	12·6	Oct. 5	25·91	31·7
			9	·89	43·7	Oct. 17	·69	56·0	3	·15	11·8	9	·83	30·0
g			17	5·00	43·5	23	·70	56·9	5	·19	10·7	14	26·01	30·8
Sept. 17	0·56	5·1	27	·11	44·4	Nov. 21	·72	57·3	9	·13	11·4			
Oct. 5	·60	4·2												

Digitized by Google

From the 14 days on which all of the four reference stars have been observed, the following means are found for them :—

	h m s	° ′ ″
A	0 31 32·093	+ 10 49 31·88
B	37 4·275	16 3 22·47
C	1 17 2·159	10 47 13·06
D	22 25·921	16 30 16·34

The means of the reductions to these places are given as day corrections with the first part of the preceding table, and have been used to reduce the observed places, with exception of those placed in brackets, for the days when observations of two only of the reference stars had been made. For these days the following corrections determined from all observed stars were adopted :—

		s	″	
Sept.	25	$\Delta\alpha$ — 0·05	$\Delta\delta$ = — 0·1	from 10 stars
	29	— 0·04	+ 0·4	„ 5 „
Oct.	24	+ 0·10	+ 0·4	„ 10 „
Nov.	21	— 0·15	— 0·4	„ 7 „

The means of the corrected results become the following :—

Star	R.A. 1889·0	Dec. 1889·0	No. obs.	Star	R.A. 1889·0	Dec. 1889·0	No obs.	Star	R.A. 1889·0	Dec. 1889·0	No. obs.
	h m s	° ′ ″			h m s	° ′ ″			h m s	° ′ ″	
A	0 31 32·086	+10 49 31·84	17	n	0 50 59·180	+ 9 24 53·82	2	β	1 2 2·057	+16 49 9·73	3
B	37 4·284	16 3 22·53	19	o	51 32·833	11 49 46·02	3	γ	2 34·710	17 3 41·00	2
a	42 25·209	8 36 56·68	8	p	52 4·954	13 5 43·92	8	δ	4 18·307	15 4 57·94	4
b	42 31·112	9 39 10·99	4	q	53 53·712	14 0 37·55	4	ϵ	5 3·920	17 48 5·62	2
c	44 24·252	11 13 34·66	4	r	55 25·570	10 34 58·99	4	ζ	5 10·180	16 11 11·56	4
d	44 46·686	9 48 24·73	5	s	55 32·810	11 18 49·98	6	η	5 23·940	14 6 5·00	3
e	45 46·187	12 10 52·44	6	t	56 43·485	13 39 16·30	2	θ	6 55·670	16 10 28·97	3
e′	46 20·330	9 59 51·85	2	u	57 9·50	15 32 27·0	1	ι	8 13·748	15 32 44·72	6
f	46 39·940	13 2 42·70	2	v	57 16·290	12 27 9·85	3	κ	10 15·739	17 2 53·29	7
g	47 0·635	9 12 4·70	2	w	58 0·450	13 20 26·37	3	λ	11 34·267	15 46 7·00	4
h	48 2·880	10 31 11·90	5	x	59 13·637	14 20 56·31	7	μ	12 25·987	17 59 31·12	6
i	49 12·020	12 14 44·02	4	y*	59 56·93	14 23 14·2	1	C	17 2·155	10 47 13·09	17
k	50 19·637	13 21 1·72	4	y	1 0 4·355	14 47 23·25	2	D	22 25·914	16 30 16·32	17
l	50 40·310	12 6 43·50	2	z	0 29·68	15 43 8·45	1				
m	50 52·160	14 10 29·20	2	a	1 59·400	15 16 14·99	5				

The m.e. of a reduced observation is—

		s		
from 70 obs. of the refer. stars :	in R.A.	± 0·071 ;	in Dec.	± 0·41
„ 143 „ „ comp. stars	„	± 0·074	„	± 0·64

There is however no obvious reason why in this series the reference stars should be more accurately observed, and the difference shown by the m. e. in Dec. probably is only accidental. Taking all stars together, the m. e. becomes $\pm 0^s\cdot073$ $\pm 0''\cdot58$. From the unreduced places Hr. Romberg had found the values $\pm 0^s\cdot089$ $\pm 0''\cdot70$.

Digitized by Google

VIENNA.

The following results of observations obtained in the same way as those for the *Victoria* stars were communicated by Dr. Herz.

1889	A		B		C		D		Obs.
	$0^h\ 31^m$	$+10°\ 49'$	$0^h\ 37^m$	$+16°\ 3'$	$1^h\ 17^m$	$+10°\ 47'$	$1^h\ 22^m$	$+16°\ 30'$	
	s	″	s	″	s	″	s	″	
Sept. 14	31·876	32·65	4·202	23·06	2·185	13·89	25·908	17·78	O.
16	32·066	31·94	·252	22·47	·117	13·22	·968	16·67	O.
19	·063	31·34	·304	21·63	·275	12·96	26·097	16·81	O.
Oct. 15	·027	32·44	·323	23·47	...	...	...	...	O.
Nov. 3	·048	32·42	·337	22·57	...	...	...	...	H. (micr. O.)
12	...	...	·433	23·53	·148	14·05	·072	17·86	O. (micr. H.)
Dec. 9	·158	30·23	·361	21·60	...	...	...	...	H.

1889	R.A.	Dec.	1889	R.A.	Dec.	1889	R.A.	Dec.	1889	R.A.	Dec.	1889	R.A.	Dec.
a	s	″	f	s	″	q	s	″	y*	s	″	ζ	s	″
Sept. 14	25·238	57·25	Nov. 3	...	45·76	Nov. 3	53·861	38·08	Sept. 19	57·162	15·65	Sept. 16	10·225	12·50
Nov. 12	·286	57·74				12	·869	38·58				Dec. 9	·191	11·69
			g			r			z					
b			Nov. 12	0·715	4·39	Nov. 3	25·723	59·45	Dec. 9	29·606	10·19	η		
Sept. 19	31·085	10·10										Sept. 19	24·100	5·93
Nov. 3	30·976	11·97	h			s			α			Nov. 12	23·974	7·70
			Sept. 14	2·887	13·36	Sept. 16	32·861	51·66				θ		
c						Nov. 12	·819	50·03	Sept. 16	59·527	14·55	Sept. 14	55·718	30·67
Sept. 16	24·346	35·56							Nov. 12	·425	15·45	Nov. 3	·883	27·55
Nov. 12	·361	34·74	k			t								
			Sept. 19	19·763	1·55							ι		
			Nov. 12	·707	1·69	Sept. 19	43·504	17·78	β			Nov. 3	13·970	45·29
d			Dec. 9	·777	0·10				Nov. 3	2·238	11·31	12	...	45·14
Sept. 19	46·714	26·09				u						Dec. 9	·820	44·44
Nov. 3	·749	25·33	l			Nov. 3	9·792	27·73				κ		
									γ					
			Nov. 3	40·412	43·58	v			Nov. 12	34·826	41·50	Nov. 3	15·663	53·54
e												12	·732	53·36
Sept. 14	46·187	52·32	o			Sept. 19	16·386	10·62				Dec. 9	·777	53·35
Nov. 3	·206	52·02				Nov. 12	·373	10·70	δ					
Dec. 9	·366	52·69	Sept. 16	32·888	45·75	Dec. 9	·337	9·35				λ		
			Nov. 12	·912	45·90				Sept. 14	18·228	59·31	Nov. 3	34·472	6·78
						x			Nov. 12	·275	59·09	12	·331	8·68
e′			p			Sept. 14	13·713	57·05						
Sept. 16	20·302	52·68	Sept. 14	5·043	45·70	Nov. 12	·769	57·29	ε			μ		
Nov. 12	·381	53·38				Dec. 9	·841	57·19	Nov. 3	3·871	5·97	Sept. 19	26·086	32·99
												Nov. 12	·072	32·66

Digitized by Google

In the *Victoria* series, the Right Ascensions of Dr. Herz appeared considerably smaller and his Declinations more northerly than those of Dr. Oppenheim. Here the two days with observations of Dr. Herz differ from the other days in the contrary direction for both co-ordinates. It was considered best in this case to compare the observations at once with normals, and as no marked variation with magnitude showed itself in the comparison, a constant day correction was adopted for each evening, viz. :—

		$\Delta\alpha$	$\Delta\delta$	
		s	"	
Sept.	14	$+0.065$	-0.58	from 11 stars
	16	$+0.036$	$+0.16$	„ 10 „
	19	-0.034	$+0.13$	„ 12 „
Oct.	15	$+0.015$	-0.31	„ 2 „
Nov.	3	-0.056	$+0.10$	„ 15 and 16 stars
	12	$+0.012$	-0.36	„ 20 and 21 „
Dec.	9	-0.028	$+0.67$	„ 10 stars.

These values are the reductions to the normals N_2, changed by $+0^s.029$ $+0''.27$ to preserve the apparent mean system of the positions as communicated for the seven days. The means referred, therefore, to this system become the following :—

Star	R.A. 1889·0.	Dec. 1889·0.	No. Obs.	Star	R.A. 1889·0.	Dec. 1889·0.	No. Obs.	Star	R.A. 1889·0.	Dec. 1889·0.	No. Obs.
	h m s	° ′ ″			h m s	° ′ ″			h m s	° ′ ″	
A	0 31 32·035	+10 49 31·89	6	o	0 51 32·910	+11 49 45·73	2	γ	1 2 34·838	+17 3 41·14	1
B	37 4·311	16 3 22·59	7	p	52 5·108	13 5 45·12	1	δ	4 18·290	15 4 58·73	2
a	42 25·300	8 36 56·88	2	q	53 53·843	14 0 38·20	2	ϵ	5 3·815	17 48 6·07	1
b	42 30·985	9 39 11·15	2	r	55 25·667	10 34 59·55	1	ζ	5 10·198	16 11 12·51	2
c	44 24·363	11 13 35·05	2	s	55 32·850	11 18 50·75	2	η	5 24·026	14 6 6·70	2
d	44 46·686	9 48 25·82	2	t	56 43·470	13 39 17·91	1	θ	6 55·805	16 10 28·87	2
e	45 46·247	12 10 52·41	3	u	57 9·736	15 32 27·83	1	ι	8 13·853	15 32 45·09	2, 3
e′	46 20·351	9 59 52·93	2	v	57 16·349	12 27 10·37	3	κ	10 15·700	17 2 53·55	3
f	46 ...	13 2 45·86	1	x	59 13·791	14 20 57·09	3	λ	11 34·379	15 46 7·60	2
g	47 0·727	9 12 4·03	1	y^2	59 57·128	14 23 15·78	1	μ	12 26·066	17 59 32·68	2
h	48 2·952	10 31 12·78	1	z	1 0 29·578	15 43 10·86	1	C	17 2·194	10 47 13·37	4
k	50 19·732	13 21 1·26	3	α	1 59·486	15 16 14·90	2	D	22 26·024	16 30 17·12	4
l	50 40·356	12 6 43·68	1	β	2 2·182	16 49 11·41	1				

The 25 stars observed more than once give the m. e. of 1 obs. $= \pm 0^s.060$ $\pm 0''.69$, from 68 and 69 observations resp.

WASHINGTON.

Observations of some of the stars were made on four days with the Transit-Circle by Mr. Skinner. From the apparent places communicated by the Superintendent of the Observatory, the following mean places 1889·0 were computed by Dr. Lamp.

Digitized by Google

1889	A		B		C		D		Day Corrections	
	$0^h\ 31^m$	$+10°\ 49'$	$0^h\ 37^m$	$+16°\ 3'$	$1^h\ 17^m$	$+10°\ 47$	$1^h\ 22^m$	$+16°\ 30'$	$\Delta\alpha$	$\Delta\delta$
	s	″	s	″	s	″	s	″	s	″
Sept. 21	32·15	32·6	4·36	24·5	2·27	13·7	26·09	18·6	−0·036	−0·28
27	31·99	32·1	·25	23·4	·18	15·7	25·94	17·9	+0·091	−0·21
Oct. 2	32·17	31·1	·44	25·7	·32	13·7	26·09	16·4	−0·074	+0·34
17	·10	32·7	·30	23·6	·23	14·0	·02	17·3	+0·019	+0·16
Means ...	32·102	32·13	4·337	24·30	2·250	14·28	26·035	17·55		

1889	R.A.	Dec.	1889	R.A.	Dec.	1889	R.A.	Dec.	1889	R.A.	Dec.	1889	R.A.	Dec.
a	s	″	e′	s	″	p	s	″	x	s	″	θ	s	″
Sept. 21	25·29	56·7	Oct. 17	20·41	52·7	Sept. 27	5·04	45·5	Sept. 21	13·82	57·4	Oct. 17	55·82	29·2
Oct. 17	·28	56·7	f			q			y*			ι		
b			Oct. 2	40·17	43·8	Sept. 21	53·82	38·9	Sept. 21	57·06	16·0	Oct. 2	13·94	45·1
Sept. 27	31·08	10·6	h			Oct. 17	·84	38·2	z			κ		
c			Sept. 21	3·05	12·4	r			Sept. 27	29·54	10·3	Sept. 27	15·74	53·8
Sept. 21	24·36	37·2	i			Oct. 2	25·69	58·9	a			λ		
d			Sept. 27	12·02	45·3	t			Oct. 17	59·60	15·3	Sept. 21	34·45	7·7
Sept. 27	46·67	25·2	n			Sept. 27	43·48	18·7	δ			Oct. 17	·43	8·5
e			Oct. 2	59·31	53·0	u			Oct. 2	18·39	58·3	μ		
Oct. 2	46·22	51·8				Oct. 17	9·71	26·9	ζ			Oct. 2	26·17	31·6
									Oct. 17	10·25	12·0			

These observations were reduced with the day corrections given above, formed from comparison of the observations of the reference stars with their means. The m. e. of a reduced observation is found from the 22 observations of the seven stars observed more than once: in R.A. $\pm 0^s{\cdot}027$, in Dec. $\pm 0''{\cdot}95$.

Further Reduction and Combination of the Results of the Separate Series.

The results of the Cape observations, referred to the mean of the two observers Maclear and Pett, showed the following mean differences from the Berlin results :—

	$\Delta\alpha$	Form.	$\Delta\delta$	
5 stars, m. mag. 6·18	$-0^s{\cdot}002$	$-0^s{\cdot}004$	$+0''{\cdot}59$	
6 „ „ 7·18	$+0^s{\cdot}021$	$+0^s{\cdot}022$	$+0''{\cdot}45$	
10 „ „ 8·03	$+0^s{\cdot}045$	$+0^s{\cdot}044$	$+0''{\cdot}50$	Mean $+0''{\cdot}53$
10 „ „ 8·45	$+0^s{\cdot}061$	$+0^s{\cdot}055$	$+0''{\cdot}57$	
10 „ „ 8·77	$+0^s{\cdot}053$	$+0^s{\cdot}063$	$+0''{\cdot}53$	

Digitized by Google

The difference in R.A. is very closely represented by the formula $\Delta\alpha = +0^s\cdot030 + 0^s\cdot0260\ (M-7\cdot5)$, the residuals from which give the mean error of a difference Berlin – Cape for a single star in R.A. $= \pm0^s\cdot0254$, while for Dec. the mean error, after allowing for the constant mean difference of systems $+0''\cdot53$, is $\pm0''\cdot263$. Assuming, preliminarily, equal weights for the results of the two series, and taking the means of the Berlin results and the Cape results reduced to the Berlin system, the m. e. of one of these means would be only $\pm0^s\cdot013$ and $\pm0''\cdot13$; and as none of the *Sappho* series which came to hand afterwards appeared to reach a comparable accuracy, these means were retained as a basis for a first set of comparisons which were made to determine the reductions to the Berlin series and the total m. e. of the other series. Comparing with them the results found above from these, preliminary systematic corrections were derived, which for the Right Ascensions of Greenwich, Cambridge (Eng.), and Dublin, contained a term depending on magnitude, while for all other Right Ascensions, and in all cases for the Declinations, a constant reduction was adopted. Then the relative weights were established from a combination of the values found in these and in the *Iris* and *Victoria* series, and normals N_1 were formed according to these weights from all of the *Sappho* series, except that of Oxford, which was received only three years later, when the present report was in preparation. From comparison with the normals, the reduction to the adopted standard system was again investigated, and a formula including the variation with magnitude derived and adopted for every series, though in some instances the co-efficient of magnitude appeared to be merely a result of computation and not materially to contribute to the representation of the observations. The following new normals N_2 then were formed from the 14 series of reduced observations, using the same weights as before.

Normals N_2.

Star	Mag.	R.A. 1889·0	Dec. 1889·0	Star	Mag.	R.A. 1889·0	Dec. 1889·0	Star	Mag.	R.A. 1889·0	Dec. 1889·0
		h m s	° ′ ″			h m s	° ′ ″			h m s	° ′ ″
A	7·3	0 31 32·035	+10 49 32·02	n	8·7	0 50 59·175	+ 9 24 53·76	β	8·0	1 2 2·114	+16 49 10·64
B	7·3	37 4·277	16 3 22·73	o	8·2	51 32·895	11 49 45·88	γ	8·6	2 34·848	17 3 40·78
a	7·7	42 25·226	8 36 56·97	p	6·0	52 5·009	13 5 44·19	δ	6·4	4 18·288	15 4 58·67
b	9·0	42 31·029	9 39 11·02	q	8·5	53 53·727	14 0 37·95	ϵ	8·8	5 3·787	17 48 6·11
c	8·6	44 24·328	11 13 35·33	r	8·2	55 25·581	10 34 58·92	ζ	8·5	5 19·186	16 11 12·06
d	8·5	44 46·688	9 48 24·75	s	8·0	55 32·855	11 18 50·81	η	8·2	5 24·020	14 6 5·05
e	7·0	45 46·162	12 10 52·13	t	8·5	56 43·496	13 39 17·62	θ	8·5	6 55·743	16 10 29·05
e′	8·3	46 20·359	9 59 52·39	u	8·5	57 9·639	15 32 26·89	ι	6·0	8 13·827	15 32 44·73
f	7·3	46 40·048	13 2 43·82	v	7·8	57 16·347	12 27 10·12	κ	8·3	10 15·764	17 2 53·24
g	8·3	47 0·653	9 12 5·02	w	8·7	58 0·524	13 20 26·72	λ	8·8	11 34·327	15 46 7·45
h	8·4	48 2·920	10 31 12·11	x	6·0	59 13·755	14 20 56·13	μ	8·0	12 26·026	17 59 31·53
i	8·2	49 11·957	12 14 44·46	y*	9·0	59 56·980	14 23 15·45	C	7·0	17 2·168	10 47 13·28
k	6·5	50 19·692	13 21 1·76	y	7·7	1 0 4·343	14 47 23·45	D	7·2	22 25·953	16 30 16·41
l	8·8	50 40·353	12 6 43·88	z	8·5	0 29·576	15 43 9·88				
m	8·7	50 52·281	14 10 29·88	α	8·0	1 59·514	15 16 15·04				

Digitized by Google

In the final revision of the computations however, made in connection with the preparation of this report, several not altogether unimportant errors were noticed, the most material of which was a wrong magnitude assumed for star *a*. All the steps to derive normals from the results of the separate series, therefore, were gone through independently again, starting from the values N_2 as a base for the intercomparison and the determination of mean errors.

The following mean differences from the normals N_2 were found, arranging the stars in order of magnitude in five groups, and allowing weights for the separate differences from 1 to 6, according to the number of observations, as already explained for the *Victoria* stars with the introduction of class-weights.

Group	Limits of Mag.	m.m.	$\Delta\alpha$	$\Delta\delta$	st.	w.	m.m.	$\Delta\alpha$	$\Delta\delta$	st.	w.	m.m.	$\Delta\alpha$	$\Delta\delta$	st.	w.
		Berlin					Cape					Melbourne				
			s	"				s	"				s	"		
I	6·0 to 6·5	6·16	+0·0011	+ 0·01	5	22	6·15	+0·0030	+ 0·55	5	21	6·15	—0·0121	+ 1·69	5	18
II	7·0 „ 7·3	7·18	+0·0049	+ 0·04	6	33	7·18	+0·0246	+ 0·51	6	32	7·18	—0·0097	+ 1·64	6	31, 32
III	7·7 „ 8·2	8·00	+0·0005	0·00	11	45	8·01	+0·0453	+ 0·52	10	38	8·01	—0·0018	+ 1·65	10	33
IV	8·3 „ 8·5	8·44	0·0000	— 0·03	11	43	8·49	+0·0607	+ 0·52	10	41	8·40	—0·0180	+ 1·59	11	38
V	8·6 „ 9·0	8·78	—0·0017	— 0·07	10	38	8·78	+0·0516	+ 0·48	10	37	8·74	—0·0100	+ 1·75	10	31
Group		Cincinnati					Pulkowa					Greenwich				
			s	"				s	"				s	"		
I		6·16	—0·026	— 0·32	5	17	6·15	—0·062	— 0·15	5	18	6·16	—0·0185	— 0·54	5	17, 18
II		7·18	+0·003	— 0·22	6	31	7·18	—0·003	— 0·17	6	26	7·14	—0·0072	— 0·18	6	22
III		8·00	—0·006	+ 0·05	11	34	7·99	—0·039	— 0·31	11	37	8·03	+0·0155	— 0·55	10	34
IV		8·43	+0·011	— 0·01	11	38	8·43	—0·024	— 0·32	11	29	8·43	+0·0319	— 0·30	11	38
V		8·77	+0·021	— 0·30	10	32	8·76	—0·033	— 0·36	10	23	8·78	+0·0327	— 0·40	10	28, 29
Group		Cambridge (Eng.)					Dublin					Leipzig				
			s	"				s	"				s	"		
I		6·16	+0·032	+ 0·33	5	17	6·16	—0·017	+ 0·31	5	17	6·15	+0·0238	+ 0·316	5	21
II		7·19	+0·014	+ 0·07	6	26	7·16	—0·015	+ 0·51	6	30	7·17	+0·0452	+ 0·193	6	32
III		8·03	+0·035	+ 0·10	10	30	7·99	—0·002	+ 0·57	11	31, 30	8·02	+0·0415	+ 0·312	11	45
IV		8·43	+0·056	0·00	11	34	8·43	+0·026	+ 0·31	11	29	8·46	+0·0385	+ 0·457	11	44
V		8·81	+0·101	+ 0·32	10	28	8·76	+0·017	+ 0·78	10	25, 24	8·77	+0·0603	+ 0·535	10	37
Group		Leiden					Bordeaux					Washington				
			s	"				s	"				s	"		
I		6·12	+0·023	+ 0·45	3	4	6·10	+0·011	+ 1·13	3	4	6·10	+0·054	+ 0·69	4	4
II		7·18	—0·004	+ 0·09	5	13	7·07	—0·051	+ 0·65	4	12, 11	7·19	+0·065	+ 0·84	6	14
III		7·97	+0·005	+ 0·49	6	7	7·96	—0·008	+ 1·18	6	9	7·97	+0·077	+ 0·19	5	6
IV		8·44	—0·001	+ 0·50	8	8	8·40	—0·003	+ 0·99	5	5	8·45	+0·081	+ 0·35	10	11
V		8·78	—0·001	+ 0·34	5	5	8·73	+0·017	+ 0·66	6	6	8·82	+0·075	+ 0·33	5	6

Digitized by Google

Group	m.m.	Δα	Δδ	st.	w.	m.m.	Δα	Δδ	st.	w.	m.m.	Δα	Δδ	st.	w.
	Vienna					Cambridge (Mass.)					Oxford				
		s	″				s	″				s	″		
I	6·21	+0·035	+ 0·29	5	11, 12	6·17	+0·030	— 0·97	3	9	6·18	+0·061	+ 0·43	5	15
II	7·19	+0·040	+ 0·23	5, 6	17, 18	7·15	+0·108	— 1·53	2	5	7·15	—0·006	+ 0·04	2	6
III	7·98	+0·022	+ 0·40	9	17	8·00	+0·166	— 1·56	10	25	8·01	+0·044	+ 0·29	9	27
IV	8·43	+0·019	+ 0·25	11	18	8·42	+0·142	— 1·28	9	23	8·37	+0·042	+ 0·50	8	24. 23
V	8·80	+0·023	+ 0·04	7	10	8·79	+0·185	—11·38	9, 8	23, 20	8·79	+0·043	+ 0·66	8	24

The magnitudes used, and given with the preceding table of normals N_2, are taken from the *B.D.*, except for stars **x** and *ι*.

For the star **n**, in Group V, the Bordeaux Declination was arbitrarily changed by $-5''$, which seems to be the correction required for some error of reading or of reduction, and the Declination determined at Cambridge (Mass.) was excluded, being more than $2''$ in error, though all the three separate observations are in close accordance. In the comparison of the Greenwich and Oxford results due account was taken of the proper motions whenever necessary.

The means for the five groups treated by the method of least squares yield the following formulæ :—

Series	Deviation from System of Normals N_2				Declination	
	Right Ascension					
	s	s			″	
Berlin	+ 0·0006	— 0·0017 (M — 8)		w_2 126	— 0·012	
Cape	+ 0·0432	+ 0·0212	,,	124	+ 0·511	
Melbourne	— 0·0105	— 0·0006	,,	103	+ 1·659	
Cincinnati	+ 0·0049	+ 0·0145	,,	103	— 0·134	″
Pulkowa	— 0·0298	+ 0·0054	,,	93	— 0·269	—0·090 (M — 7·81)
Greenwich	+ 0·0175	+ 0·0221	,,	97	— 0·395	
Cambridge (Eng.)	+ 0·0519	+ 0·0260	,,	98	+ 0·146	
Dublin	+ 0·0062	+ 0·0173	,,	94	+ 0·507	+0·095 (M — 7·80)
Leipzig	+ 0·0440	+ 0·0088	,,	124	+ 0·373	+0·107 (M — 7·92)
Leiden	+ 0·0003	— 0·0047	,,	24	+ 0·334	
Bordeaux	— 0·0103	+ 0·0148	,,	24	+ 0·893	
Washington	+ 0·0738	+ 0·0098	,,	28	+ 0·525	
Vienna	+ 0·0260	— 0·0075	,,	52	+ 0·260	
Cambridge (Mass.)	+ 0·1425	+ 0·0529	,,	52	— 1·369	
Oxford	+ 0·0425	— 0·0034	,,	72	+ 0·440	+0·097 (M — 7·95)

It should be remembered that in the case of Berlin and of Leiden these deviations refer to Right Ascensions which already have received well established corrections depending on magnitude. Among the other 14 series, seven show a decided variation of the error of Right Ascension with magnitude, while for the remaining

Digitized by Google

seven a constant reduction might serve equally well. The computed weight w_2 of the second term is given with the table in order to show that in some instances the determination of the variation is very poor.

Among the Declination series are seven referred to the same fundamental system, viz., Berlin, Cincinnati, Pulkowa, Dublin, Leipzig, Vienna, and Cambridge (Mass.); perhaps also Cambridge (Eng.) belongs to this group. These, therefore, ought not to show any mean difference exceeding reasonable limits of probable error, which decidedly is not the case in four of these series, and the actual difference is clearly progressive with magnitude in case of Pulkowa, Dublin, and Leipzig. Account was taken of the variation in the further reduction of these three series, as was done for R.A. throughout; and a similar variation was also adopted for the Oxford Declinations, because the co-efficient was found quite of the same order as in the three other series, though in this case it might have been neglected equally well.

The most striking deviations are shown by the observations of Cambridge (Mass.). The manner in which meridian observations are made at that observatory, and which is described in detail in Vol. XXIX of the *Annals of the Harvard College Observatory*, Paper No. VI, seems to be highly objectionable as well for R.A. as for Dec. The use of a reticule ruled on a glass plate instead of spider lines produces unnecessary difficulties in the observations, and appears to give rise to very considerable systematic errors. With the coarser lines used for the *Sappho* stars, the variation with magnitude has reached an amount far greater than in any other of the 47 series presently discussed, with the single exception of the quite extraordinary case of Königsberg. This may be individual, and so may be the quite extraordinary systematic error of the Cambridge Declinations, but this latter is accompanied by an accidental error of an amount quite unusual in modern meridian observations, which cannot be regarded as individual, because it is shown also by other series of declinations determined with the instrument. This being provided with a very powerful telescope, and of a construction which has secured high accuracy in the declinations at other observatories, the fault cannot lie but with the method employed, viz., observing transits over inclined lines instead of directly pointing at the star either with the telescope or with a micrometer wire.

Owing to the great accidental error of the means for the five groups, it cannot be made out whether the systematic error of the Cambridge Declinations has varied with the magnitude of the stars between the limits comprised by the *Sappho* stars. This is probable, but in absence of any empirical evidence it has been considered safer to employ the mean reduction as a constant.

Digitized by Google

The following reductions to the Berlin system therefore were adopted:—

		s	s		″	″	
Cape	$\Delta\alpha =$	− 0·043	− 0·0229	(M − 8)	$\Delta\delta =$ − 0·52		
Melbourne		+ 0·011	− 0·0011	„	− 1·67		
Cincinnati		− 0·004	− 0·0162	„	+ 0·12		
Pulkowa		+ 0·030	− 0·0071	„	+ 0·27	+ 0·090	(M − 8)
Greenwich		− 0·017	− 0·0238	„	+ 0·38		
Cambridge (Eng.)		− 0·051	− 0·0277	„	− 0·16		
Dublin		− 0·006	− 0·0190	„	− 0·54	− 0·095	„
Leipzig		− 0·043	− 0·0105	„	− 0·39	− 0·107	„
Leiden		0·000	+ 0·0030	„	− 0·35		
Bordeaux		+ 0·011	− 0·0165	„	− 0·90		
Washington		− 0·073	− 0·0115	„	− 0·54		
Vienna		− 0·025	+ 0·0058	„	− 0·27		
Cambridge (Mass.)		− 0·142	− 0·0546	„	+ 1·36		
Oxford		− 0·042	+ 0·0017	„	− 0·46	− 0·097	„

As the range of the *Sappho* stars in Declination is nearly 10°, it was desirable to examine whether a change of the systematic differences of the Declinations was perceptible within this range. This investigation was made in a previous approximation, using the deviations of the Declinations (reduced by provisionally adopted constant corrections) from the normals N_1, and the results coming out either decidedly negative or showing traces only of a variation which could be entirely neglected, with perhaps one single exception, was not generally repeated. Forming four groups of the stars between Dec. 8°·6 and 11°·3, in number of 12 in the complete series, 11°·8 and 13°·7 (10 stars), 14°·0 and 15°·8 (12 stars), and 16°·1 and 18°·0 (9 stars), the following mean outstanding deviations from N_1 were found, against which are placed numbers indicating the corresponding sums of the class-weights:—

Group	M. Dec.	Berlin	Cape	Melbourne	Cincinnati	Pulkowa	Greenwich	Cambridge (Eng.)
	°	″	″	″	″	″	″	″
A	10·2	+0·06 50	+0·05 48	−0·09 47	−0·04 46	+0·02 41	+0·06 40	−0·20 39
B	12·7	+0·10 40	−0·09 39	+0·12 35	−0·10 33	0·00 29	−0·11 33	+0·34 27
C	14·9	−0·07 49	+0·02 43	−0·05 37	−0·01 39	+0·01 32	−0·04 38	+0·05 36
D	16·8	−0·06 53	−0·02 40	−0·02 34	+0·15 34	+0·03 21	+0·08 30	−0·19 33

Group	M. Dec.	Dublin	Leipzig	Leiden	Bordeaux	Washington	Vienna	Cambridge (Mass.)
	°	″	″	″	″	″	″	″
A	10·2	−0·14 40	−0·20 52	+0·13 14	+0·03 14	−0·21 15	−0·16 22	+0·17 23
B	12·7	−0·03 26	−0·08 41	+0·06 4	+0·50 2	+0·08 5	−0·35 18	−0·29 19
C	14·9	+0·19 33	+0·05 47	−0·03 5	+0·36 8	−0·08 11	+0·25 19	+0·15 23
D	16·8	+0·03 31	+0·22 39	−0·08 13	−0·12 10	+0·47 10	+0·05 19	+0·29 16

A progression which looks very regular, and might be considered to exceed the probable limits of accidental errors, is shown for Leipzig, and was fully confirmed by repeating the grouping with the residuals by which the Leipzig Declinations, corrected by

Digitized by Google

the complete formula derived above, differ from the more approximate normals N_2, the means for the four groups then becoming $-0''\cdot21$, $-0''\cdot04$, $+0''\cdot05$, and $+0''\cdot25$ respectively. It seems probable, indeed, that this progression may partly be traced to a wave in the division errors of the circle, which was read only with two microscopes. Something of this kind is perceptible also in the differences between the Declinations obtained in the two positions of the instrument; the mean difference E. – W. in the four groups is $+0''\cdot52$, $-0''\cdot22$, $-0''\cdot14$, $-0''\cdot08$, so that there exists a variation of $0''\cdot67$ from the first group to the others, which, nearly constant among themselves, make the mean difference $= -0''\cdot15$. This variation however appears to happen suddenly within the 11th degree, and so far does not confirm the variation shown by the above residuals; nor are the two extremes of them actually larger than the outstanding mean differences in the *Iris* series of the same instrument, which showed no trace of a regular progression. The grouping of the separate errors, therefore, which produced the apparently regular variation with Declination in the present instance, appears to have been accidental to a certain extent, and it has not been considered safe to rely upon this apparent variation, which was ultimately neglected for Leipzig, as in all the other series.

The total mean errors for the *Sappho* series were determined in the same manner as in the final determination for the *Victoria* series from the differences between the reduced results of the separate series and the normals N_2. The following tables contain the particulars of the determination :—

Right Ascensions.

Series	Σpvv	No. Stars	Aver. Prop.	Uncorrected square of m. e. (1)	Factor	M.E. for w. 1	Average	
							weight	m. e.
						s		s
Berlin	0·011239	43	0·440	0·000274	1·786	± 0·022	4·2	± 0·011
Cape	0·059379	41	0·099	0·001522	1·110	0·041	4·1	0·020
Melbourne	0·098717	42	0·056	0·002468	1·060	0·051	3·6	0·027
Cincinnati	0·190260	43	0·025	0·004640	1·026	0·069	3·6	0·037
Pulkowa	0·377490	43	0·016	0·009207	1·017	0·097	3·1	0·055
Greenwich	0·145655	42	0·042	0·003641	1·044	0·062	3·3	0·034
Cambridge (Eng.) ...	0·247461	42	0·022	0·006186	1·023	0·079	3·2	0·044
Dublin	0·122402	43	0·035	0·002985	1·036	0·056	3·1	0·032
Leipzig	0·074492	43	0·064	0·001817	1·069	0·044	4·2	0·022
Leiden	0·021206	27	0·087	0·000848	1·095	0·030·	1·4	0·026
Bordeaux	0·131757	24	0·014	0·005989	1·014	0·078	1·5	0·064
Washington	0·039825	30	0·036	0·001422	1·037	0·038	1·4	0·033
Vienna	0·130904	37	0·023	0·003740	1·024	0·062	2·0	0·044
Cambridge (Mass.) ...	0·086771	33	0·026	0·002799	1·026	0·054	2·6	0·033
Oxford	0·177063	32	0	0·005902	1	0·077	3·0	0·044

Digitized by Google

The number of determined constants to be subtracted from the number of stars in the determination of the square of the mean error is two in every case.

Declinations.

Series	Σpvv	No. of Stars	No. of Const.	Average Prop.	Uncorrected square of m. e. (1)	Factor	M.E. for w. 1	Average weight	Average m. e.
							″		″
Berlin	3·7204	43	1	0·292	0·0886	1·412	± 0·35	4·2	± 0·17
Cape	4·9419	41	1	0·192	0·1236	1·237	0·39	4·1	0·19
Melbourne	9·1709	42	1	0·048	0·2237	1·050	0·48	3·6	0·25
Cincinnati	17·5420	43	1	0·046	0·4177	1·048	0·66	3·6	0·35
Pulkowa	15·5418	43	2	0·042	0·3791	1·043	0·63	3·1	0·36
Greenwich	17·9760	42	1	0·070	0·4384	1·076	0·69	3·4	0·37
Cambridge (Eng.) ...	25·3258	42	1	0·040	0·6177	1·041	0·80	3·2	0·45
Dublin	19·9396	43	2	0·044	0·4863	1·046	0·71	3·0	0·41
Leipzig	16·6636	43	2	0·085	0·4064	1·093	0·67	4·2	0·33
Leiden	5·1321	27	1	0·062	0·1974	1·066	0·46	1·4	0·40
Bordeaux	12·7858	24	1	0·022	0·5559	1·022	0·75	1·5	0·62
Washington... ...	12·5193	30	1	0·013	0·4317	1·013	0·66	1·4	0·56
Vienna	21·8692	38	1	0·023	0·5911	1·024	0·78	2·0	0·55
Cambridge (Mass.)...	35·4513	32	1	0·020	1·1436	1·020	1·08	2·6	0·68
Oxford	10·9169	32	2	0	0·3639	1	0·60	3·0	0·35

In the following table, the results of the separate series, reduced to the systems adopted within the series, are collected from the preceding discussion and given under the heading "observed R.A. and Dec." The next columns "reduced R.A. and Dec.," follow from them by applying the reductions to the A.G.C. system as represented by the Berlin observations which are tabulated above, p. 661. These reduced values are combined into means using the weights as finally determined, given in the columns "W.," and the deviation of the separate reduced results from these final means are tabulated in the columns "Diff." Account has been taken of proper motion in this comparison whenever necessary, using those values of p. m. which are given below with the general summary of results.

Digitized by Google

General Table of Results of Observations of the Sappho Stars, and Comparison with Final Normals.

Observatory	Epoch	No. obs.	Right Ascension obs.	Right Ascension red.	W.	Diff.	Declination obs.	Declination red.	W.	Diff.
			h m				° ′			
A m 7·3			0 31				10 49			
Berlin	89·85	35	s 32·048	s ·048	17·9	+ s 0·011	32″·15	32″·15	5·4	+ 0″·16
Cape	·80	48	·069	·043	7·1	+ 6	32·58·	·06	5·7	+ 0·07
Melbourne	{·80 ·79}	27, 30	·011	·023	5·4	— 14	33·81	·14	2·7	+ 0·15
Cincinnati	·76	22	·040	·047	2·3	+ 10	31·78	31·90	2·3	— 0·09
Pulkowa	·77	17	·086	·121	0·7	+ 84	31·84	32·05	1·2	+ 0·06
Greenwich	·87	17	·035	·035	2·4	— 2	31·84	·22	1·6	+ 0·23
Cambridge (Eng.)	·77	16	·028	·996	1·5	— 41	31·89	31·73	0·7	— 0·26
Dublin	·85	25	·035	·043	2·0	+ 6	32·28	·81	3·2	— 0·18
Leipzig	·78	23	·068	·038	4·2	+ 1	32·06	·74	2·0	— 0·25
Leiden	·81	3	31·998	·996	3·5	— 41	32·25	·90	1·4	— 0·09
Bordeaux	·83	4	·980	·002	0·7	— 35	32·75	·84·	0·7	— 0·15
Washington	·76	4	32·102	·037	3·1	0	32·13	·59	0·5	— 0·40
Vienna	·78	6	·035	·005·	1·1	— 31	31·89	·62	0·7	— 0·37
			h m				° ′			
B m 7·3			0 37				16 3			
Berlin	89·85	35	s 4·289	s ·289	17·9	+ s 0·009	22″·57	22″·57	5·4	— 0″·16
Cape	·80	48	·302	·276	7·1	— 4	23·38	·86	5·7	+ 0·13
Melbourne	·80	26, 29	·248	·260	5·3	— 20	24·49	·82	2·7	+ 0·09
Cincinnati	·76	21	·289	·296	2·3	+ 16	22·28	·40	2·2	— 0·33
Pulkowa	·77	19	·284	·319	0·7	+ 39	22·53	·74	1·2	+ 0·01
Greenwich	·88	18	·285	·285	2·4	+ 5	22·36	·74	1·6	+ 0·01
Cambridge (Eng.)	·77	16	·283	·251	1·5	— 29	23·23	23·07	0·7	+ 0·34
Dublin	·85	24, 25	·262	·270	2·0	— 10	23·37	22·90	3·2	+ 0·17
Leipzig	·78	23	·322	·292	4·2	+ 12	23·17	·85	2·0	+ 0·12
Leiden	·80	4	·273·	·272	4·5	— 8	22·78·	·43·	1·7	— 0·29
Bordeaux	·83	4	·250	·272	0·7	— 8	23·40	·49·	0·7	— 0·23
Washington	·76	4	·337	·272	3·1	— 8	24·30	23·76	0·5	+ 1·03
Vienna	·80	7	·311	·281·	1·2	+ 1	22·59	22·32	0·8	— 0·51
			h m				° ′			
a m 7·7			0 42				8 36			
Berlin	89·76	8	s 25·232	s ·232	9·7	+ s 0·004	56″·90	56″·90	3·6	— 0″·03
Cape	·74	8	·267·	·231	2·3	+ 3	57·74	57·22	2·2	+ 0·29
Melbourne	·72	5[1]	·207	·218	1·8	— 10	58·49	56·82	1·0	— 0·11
Cincinnati	·72	4	·195	·196	0·5	— 32	57·11	57·23	0·5	+ 0·30
Pulkowa	·77	8	·209	·241·	0·5	+ 14	56·68	56·93	1·0	0·00
Greenwich	·72	4	·190	·180	0·9	— 48	56·40	·78	0·6	— 0·15
Cambridge (Eng.)	·74	4	·237	·194	0·6	— 34	57·12	·96	0·5	+ 0·03
Dublin	·79	5	·242	·242	1·1	+ 14	56·77	·26	0·8	— 0·67

Digitized by Google

Observatory	Epoch	No. obs.	Right Ascension obs.	Right Ascension red.	W.	Diff.	Declination obs.	Declination red.	W.	Diff.
			h m				° ′			
a—*cont.*			0 42				8 36			
Leipzig	89·76	8	s 25·263	s ·223	1·8	— s 0·005	″ 56·96	″ 56·60	1·1	— ″ 0·33
Leiden	·79	2	·239	·238	2·5	+ 10	57·77	57·42	1·0	+ 0·49
Bordeaux	·82	2	·170	·186	0·2	— 42	57·75	56·84·	0·3	— 0·09
Washington	·76	2	·277	·207	1·0	— 21	56·64	·10	0·2	— 0·83
Vienna	·79	2	·300	·273	0·5	+ 45	56·88	·61	0·2	— 0·32
Cambridge (Mass.)	·90	2	·398	·272·	0·4	+ 44	56·72	58·08	0·2	+ 1·15
Oxford	90·13	3	·282	·240	0·7	+ 12	57·30	56·87	0·7	— 0·06
[1] Dec. w. $4\frac{1}{2}$										
	m		h m				° ′			
b 9·0			0 42				9 39			
Berlin	89·83	7	s 31·043	s ·043	9·0	+ s 0·019	″ 11·10	″ 11·10	3·4	+ ″ 0·03
Cape	·74	5	·063	·997·	1·6	— 26	11·77	·25	1·6	+ 0·17
Melbourne	·75	3, 4	30·953	·963	1·2	— 61	12·86	·19	0·9	+ 0·11
Cincinnati	·74	4	31·055	·034·	0·5	+ 11	10·47	10·59	0·5	— 0·49
Pulkowa	·76	4	·112	·135	0·4	+ 111	10·99	11·35	0·7	+ 0·27
Greenwich	·75	3	·008	·967	0·7	— 57	10·65	·03	0·5	— 0·05
Cambridge (Eng.)	·73	2	·152	·073	0·3	+ 49	10·50	10·34	0·3	— 0·74
Dublin	·81	3	·061	·036	0·8	+ 12	11·56	·93	0·5	— 0·14
Leipzig	·78	6	·082	·028	1·5	+ 4	11·64	11·14	1·0	+ 0·07
Leiden	·79	1	30·990	·993	1·3	— 31	11·57	·22	0·5	+ 0·15
Bordeaux	·82	1	·970	·964	0·1	— 60	10·20	9·29·	0·1	— 1·77
Washington	·74	1	31·171	·086·	0·5	+ 63	10·39	·85	0·1	— 1·23
Vienna	·78	2	30·985	·965	0·5	— 59	11·15	10·88	0·2	— 0·19
Cambridge (Mass.)	·94	2	31·280	·013·	0·4	— 10	9·68	11·04	0·2	— 0·02
Oxford	90·50	3	30·993	·953	0·7	— 71	11·73	·17	0·7	+ 0·16
	m		h m				° ′			
c 8·6			0 44				11 18			
Berlin	89·91	7	s 24·325	s ·325	9·0	— s 0·004	″ 35·42	″ 35·42	3·4	+ ″ 0·12
Cape	·80	8	·388	·332	2·3	+ 3	35·83	·31	2·2	+ 0·01
Melbourne	·88	4[1]	·317	·327	1·4	— 2	36·95	·28	0·8	— 0·02
Cincinnati	·76	5	·380	·366	0·6	+ 37	34·57	34·69	0·6	— 0·62
Pulkowa	·75	4	·252	·278	0·4	— 51	34·66	·99	0·7	— 0·32
Greenwich	·81	4	·384	·353	0·9	+ 24	34·97	35·35	0·6	+ 0·05
Cambridge (Eng.)	·75	3	·431	·363	0·5	+ 34	35·56	·40	0·4	+ 0·09
Dublin	{·89 ·85}	4, 3	·326	·309	0·9	— 20	36·10	·50·	0·5	+ 0·21
Leipzig	·75	8	·409	·359	1·8	+ 30	35·60	·14	1·1	— 0·17
Bordeaux	·85	1	·270	·271	0·1	— 58	36·80	·89·	0·1	+ 0·60

Digitized by Google

Observatory	Epoch	No. obs.	Right Ascension obs.	Right Ascension red.	W.	Diff.	Declination obs.	Declination red.	W.	Diff.
			h m				° ′			
c—*cont.*			0 44				11 13			
Washington.....	89·73	1	s 24·324	s ·244	0·5	— s 0·085	″ 36·92	″ 36·38	0·1	+ ″ 1·07
Vienna	·79	2	·363	·341	0·5	+ 12	35·05	34·78	0·2	— 0·53
Oxford	90·87	3	·368	·327	0·7	— 3	35·92	35·40	0·7	+ 0·16
[1] w. $3\frac{1}{2}$										
			h m				° ′			
m d 8·5			0 44				9 48			
Berlin	89·85	6	s 46·684	s ·684	8·1	— s 0·004	″ 24·73	″ 24·73	3·2	+ ″ 0·03
Cape	·84	10	·749	·695	2·7	+ 7	25·33	·81	2·6	+ 0·11
Melbourne	·85	6	·688	·699	2·1	+ 11	26·43	·76	1·2	+ 0·06
Cincinnati	·77	5	·748	·736	0·6	+ 48	24·19	·31	0·6	— 0·39
Pulkowa	·75	5	·686	·713	0·5	+ 25	24·73	25·05	0·8	+ 0·35
Greenwich	·87	5	·697	·668	1·0	— 20	24·31	24·69	0·7	— 0·01
Cambridge (Eng.)...	·75	6	·706	·641	0·8	— 47	24·54	·38	0·6	— 0·32
Dublin	·87	3	·761	·746	0·8	+ 58	24·61	·02	0·5	— 0·67
Leipzig	·77	11	·726	·677	2·2	— 11	25·12	·67	1·3	— 0·03
Leiden	·87	1	·692	·694	1·3	+ 6	25·36	25·01	0·5	+ 0·31
Washington.....	·74	1	·761	·682	0·5	— 6	24·99	24·45	0·1	— 0·25
Vienna	·78	2	·686	·663	0·5	— 24	25·82	25·55	0·2	+ 0·85
Cambridge (Mass.)...	·88	2	·840	·671	0·4	— 17	22·79	24·15	0·2	— 0·55
Oxford	90·78	3	·723	·682	0·7	— 6	24·96	·45	0·7	— 0·24
			h m				° ′			
m e 7·0			0 45				12 10			
Berlin	89·88	10	s 46·163	s ·163	11·0	— s 0·002	″ 52·16	″ 52·16	4·0	+ ″ 0·04
Cape	·84	14, 15	·177	·157	3·4	— 8	52·58	·06	3·1	— 0·06
Melbourne	·73	8, 10	·184	·196	2·6	+ 32	53·61	51·94	1·7	— 0·18
Cincinnati	·78	7	·156	·168	0·8	+ 3	51·67	·79	0·8	— 0·33
Pulkowa	·77	6	·187	·224	0·5	+ 59	52·44	52·62	0·8	+ 0·50
Greenwich	·92	7	·155	·162	1·2	— 3	51·58	51·96	0·9	— 0·16
Cambridge (Eng.) ...	·75	3	·140	·116	0·5	— 49	52·59	52·43	0·4	+ 0·31
Dublin	·85	6	·141	·154	1·5	— 11	52·60	·16	1·7	+ 0·04
Leipzig	·75	14	·217	·184	2·6	+ 19	52·41	·12	1·4	0·00
Leiden	·72	1	·164	·161	1·3	— 3	53·24	·89	0·5	+ 0·77
Washington.....	·76	1	·146	·084	0·5	— 81	52·14	51·60	0·1	— 0·52
Vienna	·83	3	·247	·216	0·7	+ 51	52·41	52·14	0·3	+ 0·02
Cambridge (Mass.)...	·96	2	·235	·148	0·4	— 18	51·39	·75	0·2	+ 0·63
Oxford	90·55	3	·141	·097	0·7	— 71	52·09	51·73	0·7	— 0·39

Digitized by Google

Observatory	Epoch	No. obs.	Right Ascension obs.	Right Ascension red.	W.	Diff.	Declination obs.	Declination red.	W.	Diff.
			h m				° ′			
e′ (8·3 comb.)			0 46				9 59			
Berlin	89·72	3	s 20·374	s ·374	4·9	+ s 0·017	″ 52·68	″ 52·68	2·1	+ ″ 0·14
Melbourne	·77	5 [1]	·327	·338	1·7	— 19	53·77	·39	1·0	— 0·14
Cincinnati	·79	5	·327	·318	0·6	— 39	52·40	·81	0·6	+ 0·28
Pulkowa	·79	2	·330	·358	0·3	+ 1	51·85	·44	0·4	— 0·09
Greenwich	·72	5	·321	·297	1·0	— 60	52·10	·77	0·7	+ 0·23
Cambridge (Eng.)	·74	2	·460	·400	0·3	+ 43	53·12	53·25	0·3	+ 0·72
Dublin	·94	4	·465	·454	0·9	+ 97	52·68	52·40	0·7	— 0·13
Leipzig	·72	5	·364	·317	1·3	— 40	52·38	·25	0·9	— 0·29
Leiden	·79	1	·376	·377	1·3	+ 20	52·27	·21	0·5	— 0·32
Washington	·80	1	·429	·353	0·5	— 4	52·86	·61	0·1	+ 0·08
Vienna	·79	2	·351	·327	0·5	— 30	52·93	·95	0·2	+ 0·42
Cambridge (Mass.)	·83	2	·462	·304	0·4	— 53	50·76	·41	0·2	— 0·12
Oxford	90·76	3	·395	·354	0·7	— 6	52·44	·24	0·7	— 0·25

[1] w. 4½

The Berlin position refers to the middle point between the two components. The duplicity not being noticed in any of the other series, their results all must be supposed to refer to the optical centre of gravity, which, according to Küstner's estimates, is to be assumed ″·29 south of the middle point. The corresponding reduction is included in the "reduced Declinations."

			h m				° ′			
f m 7·3			0 46				13 2			
Berlin	89·84	5	s 40·048	s ·048	7·2	s 0·000	″ 43·97	″ 43·97	2·9	+ ″ 0·19
Cape	·72	4	·085	·058	1·3	+ 10	44·20	·68	1·3	— 0·10
Melbourne	·82	3	·077	·089	1·2	+ 41	45·37	·70	0·7	— 0.08
Cincinnati	·77	3	·070	·077	0·4	+ 29	42·97	·09	0·4	— 0·69
Pulkowa	·76	2	39·940	·975	0·3	— 73	42·70	42·91	0·4	— 0·87
Greenwich	·76	3	40·015	·015	0·7	— 33	43·64	44·02	0·5	+ 0·24
Cambridge (Eng.)	·74	3	·079	·047	0·5	— 1	44·58	·42	0·4	+ 0·64
Dublin	·84	2	39·983	·991	0·9	— 57	44·11	43·64	0·8	— 0·14
Leipzig	·74	4	40·115	·085	1·1	+ 37	44·25	·93	0·7	+ 0·15
Washington	·76	1	·096	·031	0·5	— 17	44·14	·60	0·1	— 0·18
Vienna	·84	1	...	...	...	...	45·86	45·59	0·1	+ 1·81
Cambridge (Mass.)	·89	3	·180	·076	0·6	+ 28	41·77	43·13	0·2	— 0·65
Oxford	90·45	3	·058	·015	0·7	— 33	43·93	·54	0·7	— 0·22
			h m				° ′			
g m 8·3			0 47				9 12			
Berlin	89·86	4	s 0·657	s ·657	6·1	+ s 0·010	″ 4·97	″ 4·97	2·5	+ ″ 0·05
Cape	·73	4	·711	·661	1·3	+ 14	5·76	5·24	1·3	+ 0·32
Melbourne	·87	3	·612	·623	1·2	— 24	6·63	4·96	0·7	+ 0·04
Cincinnati	·78	3	·528	·519	0·4	— 128	4·95	5·07	0·4	+ 0·15

Digitized by Google

Observatory	Epoch	No. obs.	Right Ascension obs.	Right Ascension red.	W.	Diff.	Declination obs.	Declination red.	W.	Diff.
			h m				° ′			
g—*cont.*			0 47				9 12			
Pulkowa	89·73	2	s 0·635	s ·663	0·3	+ s 0·016	″ 4·70	″ 5·00	0·4	+ ″ 0·08
Greenwich	·84	4	·759	·735	0·9	+ 88	5·18	·56	0·6	+ 0·64
Cambridge (Eng.)	·73	3	·661	·601	0·5	— 46	4·25	4·09	0·4	— 0·83
Dublin	·80	2	·634	·623	0·6	— 24	5·20	·63	0·4	— 0·29
Leipzig	·72	5	·716	·669	1·3	+ 22	5·22	·80	0·9	— 0·13
Leiden	·83	1	·596	·597	1·3	— 50	5·63	5·28	0·5	+ 0·36
Bordeaux	·83	1	·770	·776	0·1	+ 129	5·10	4·19	0·1	— 0·72
Vienna	·87	1	·727	·703	0·3	+ 56	4·03	3·76	0·1	— 1·16
Cambridge (Mass.)	·89	3	·795	·637	0·6	— 10	3·60	4·96	0·2	+ 0·04
Oxford	91·43	3, 2	·634	·593	0·7	— 53	4·52	·03	0·5	— 0·86
			h m				° ′			
m h 8·4			0 48				10 31			
Berlin	89·83	9	s 2·920	s ·920	10·4	+ s 0·001	″ 12·18	″ 12·18	3·8	+ ″ 0·13
Cape	·79	10	·989	·937	2·7	+ 18	12·49	11·97	2·6	— 0·09
Melbourne	·84	6, 5 [1]	·897	·908	1·9	— 11	13·09	·42	1·0	— 0·63
Cincinnati	·74	5	·942	·931	0·6	+ 12	12·06	12·18	0·6	+ 0·12
Pulkowa	·75	5	·880	·908	0·5	— 11	11·90	·21	0·8	+ 0·15
Greenwich	{90·47 ·62}	5, 6	·969	·943	1·0	+ 23	11·82	·20	0·8	+ 0·19
Cambridge (Eng.)	89·78	5	·906	·844	0·7	— 75	12·19	·03	0·5	— 0·03
Dublin	·77	4	·949	·936	0·9	+ 17	12·46	11·88	0·7	— 0·18
Leipzig	·75	12	·972	·924	2·3	+ 5	12·60	12·17	1·3	+ 0·11
Leiden	·87	1	·903	·904	1·3	— 15	12·27	11·92	0·5	— 0·13
Bordeaux	·82	1	·870	·874	0·1	— 45	13·70	12·79	0·1	+ 0·73
Washington	·73	1	3·014	·936	0·5	+ 17	12·12	11·58	0·1	— 0·48
Vienna	·71	1	2·952	·929	0·3	+ 10	12·78	12·51	0·1	+ 0·45
Cambridge (Mass.)	·85	3	3·065	·901	0·6	— 18	10·99	·35	0·2	+ 0·30
Oxford	91·04	3	2·943	·903	0·7	— 14	12·50	·00	0·7	+ 0·02
[1] R A. w. 5½, Dec. w. 4½										
			h m				° ′			
m i 8·2			0 49				12 14			
Berlin	89·81	6	s 11·952	s ·952	8·1	— s 0·005	″ 44·87	″ 44·87	3·2	+ ″ 0·37
Cape	·76	4	·976	·929	1·3	— 28	44·98	·46	1·3	— 0·05
Melbourne	·72	3	·958	·969	1·2	+ 12	46·24	·57	0·7	+ 0·06
Cincinnati	·73	3	·923	·915	0·4	— 41	44·75	·87	0·4	+ 0·36
Pulkowa	·77	4	12·020	·049	0·4	+ 92	44·02	·31	0·7	— 0·20
Greenwich	·88	3	11·944	·922	0·7	— 35	44·00	·38	0·5	— 0·12
Cambridge (Eng.)	·72	4	12·008	·951	0·6	— 06	44·77	·61	0·5	+ 0·10
Dublin	·86	2	11·985	·976	0·6	+ 19	44·72	·17	0·4	— 0·33
Leipzig	·73	5	12·026	·980	1·3	+ 24	44·06	43·64	0·9	— 0·87
Leiden	·72	1	11·983	·984	1·3	+ 27	44·57	44·22	0·5	— 0·29

Digitized by Google

Observatory	Epoch	No. obs.	Right Ascension		W.	Diff.	Declination		W.	Diff.
			obs.	red.			obs.	red.		
			h m				° ′			
i—*cont.*			0 49				12 14			
			s	s		s	″	″		″
Bordeaux	89·85	1	11·880	·888	0·1	—0·069	46·20	45·29	0·1	+ 0·79
Washington	·74	1	12·111	·036	0·5	+ 79	45·09	44·55	0·1	+ 0·04
Cambridge (Mass.)	·85	3	·096	·943	0·6	— 14	41·49	42·85	0·2	— 1·65
Oxford	91·46	3	11·951	·909	0·7	— 50	45·16	44·68	0·7	+ 0·26
m			h m				° ′			
k 6·5			0 50				13 21			
			s	s		s	″	″		″
Berlin	89·76	5	19·697	·695	7·2	0·000	1·78	1·78	2·9	+ 0·04
Cape	·74	6	·703	·695	1·8	0	2·35	·83	1·8	+ 0·09
Melbourne	·74	4, 5	·689	·702	1·5	+ 7	3·59	·92	1·1	+ 0·18
Cincinnati	·75	3	·653	·673	0·4	— 22	1·27	·39	0·4	— 0·35
Pulkowa	·78	4	·637	·678	0·4	— 17	1·72	·86	0·7	+ 0·12
Greenwich	·73	4	·639	·658	0·9	— 37	1·85	2·23	0·6	+ 0·49
Cambridge (Eng.)	·74	3	·764	·754	0·5	+ 59	2·37	·21	0·4	+ 0·47
Dublin	·87	3	·694	·717	1·1	+ 22	1·34	0·94	1·0	— 0·80
Leipzig	·75	7	·729	·701	1·7	+ 6	1·76	1·53	1·1	— 0·21
Leiden	·83	1	·673	·669	1·3	— 26	2·46	2·11	0·5	+ 0·37
Vienna	·84	3	·732	·698	0·7	+ 3	1·26	0·99	0·3	— 0·75
Cambridge (Mass.)	·88	3	·743	·683	0·6	— 12	0·68	2·04	0·2	+ 0·30
Oxford	·80	3	·751	·707	0·7	+ 12	2·13	1·82	0·7	+ 0·08
m			h m				° ′			
l 8·8			0 50				12 6			
			s	s		s	″	″		″
Berlin	89·86	4	40·355	·355	6·1	0·000	43·61	43·61	2·5	— 0·28
Cape	·78	4	·420	·360	1·3	+ 5	44·44	·92	1·3	+ 0·03
Melbourne	·76	3	·302	·312	1·2	— 43	45·86	44·19	0·7	+ 0·30
Cincinnati	·77	3	·365	·348	0·4	— 7	43·92	·04	0·4	+ 0·15
Pulkowa	·76	2	·310	·335	0·3	— 20	43·50	43·85	0·4	— 0·04
Greenwich	·75	3	354	·318	0·7	— 37	43·27	·65	0·5	— 0·24
Cambridge (Eng.)	·74	2	·532	·458	0·3	+ 103	44·86	44·70	0·3	+ 0·81
Dublin	·84	2	·372	·351	0·6	— 4	44·91	·30	0·4	+ 0·41
Leipzig	·73	4	·422	·370	1·1	+ 15	44·54	·06	0·7	+ 0·17
Vienna	·84	1	·356	·335	0·3	— 20	43·68	43·41	0·1	— 0·48
Cambridge (Mass.)	·88	2	·595	·409	0·4	+ 54	42·89	44·25	0·2	+ 0·36
Oxford	91·48	3	·426	·385	0·7	+ 30	44·45	43·91	0·7	+ 0·03
m			h m				° ′			
m 8·7			0 50				14 10			
			s	s		s	″	″		″
Berlin	89·93	4	52·286	·286	6·1	+0·006	29·92	29·92	2·5	+ 0·07
Cape	·88	4	·367	·309	1·3	+ 29	30·36	·84	1·3	— 0·01
Melbourne	·87	3	·282	·292	1·2	+ 12	31·23	·56	0·7	— 0·29
Cincinnati	·78	3	·270	·254	0·4	— 26	29·70	·82	0·4	— 0·03

Digitized by Google

Observatory	Epoch	No. obs.	Right Ascension obs.	Right Ascension red.	W.	Diff.	Declination obs.	Declination red.	W.	Diff.
			h m				° ′			
m—*cont.*			0 50				14 10			
			s	s		s	″	″		″
Pulkowa	89·85	2	52·160	·185	0·3	—0·095	29·20	29·54	0·4	— 0·31
Greenwich	·81	3	·300	·266	0·7	— 14	29·77	30·15	0·5	+ 0·30
Cambridge (Eng.)	·77	2	·321	·250	0·3	— 30	30·28	·12	0·3	+ 0·27
Dublin	·86	2	·324	·305	0·6	+ 25	30·80	·19	0·4	+ 0·34
Leipzig	·78	4	·300	·249	1·1	— 31	30·19	29·72	0·7	— 0·13
Bordeaux	·83	1	·390	·389	0·1	+ 109	31·10	30·19	0·1	+ 0·34
Cambridge (Mass.)	·93	3	·432	·252	0·6	— 28	27·64	29·00	0·2	— 0·85
			h m				° ′			
m n 8·7			0 50				9 24			
			s	s		s	″	″		″
Berlin	89·88	6	59·179	·179	8·1	+0·005	53·70	53·70	3·2	— 0·08
Cape	·86	8	·235	·177	2·3	+ 3	54·17	·65	2·2	— 0·13
Melbourne	·86	4	·124	·134	1·5	— 40	55·93	54·26	0·9	+ 0·48
Cincinnati	·76	4	·170	·154	0·5	— 20	53·52	53·64	0·5	— 0·14
Pulkowa	·72	2	·180	·205	0·3	+ 31	53·82	54·16	0·4	+ 0·38
Greenwich	·81	3	·215	·181	0·7	+ 7	52·75	53·13	0·5	— 0·65
Cambridge (Eng.)	·81	3	·212	·141	0·5	— 33	54·96	54·80	0·4	+ 1·02
Dublin	·86	2	·228	·209	0·6	+ 35	53·91	53·30	0·4	— 0·47
Leipzig	·78	9	·238	·187	2·0	+ 13	54·37	·50	1·2	+ 0·12
Bordeaux	·81	1	·110	·109	0·1	— 65	60·20	59·29	0·1	+ 0·52[1]
Washington	·76	1	·236	·155	0·5	— 19	53·34	52·80	0·1	— 0·98
Cambridge (Mass.)	·95	3	·343	·163	0·6	— 11	54·73	[56·09]	...	+[2·31]
								[1] with correct. — 5″		
			h m				° ′			
m o 8·2			0 51				11 49			
			s	s		s	″	″		″
Berlin	89·84	6	32·900	·900	8·1	+0·005	45·94	45·94	3·2	+ 0·06
Cape	·78	8	·923	·876	2·3	— 19	46·47	·95	2·2	+ 0·07
Melbourne	·83	4[1]	·881	·892	1·4	— 3	47·60	·93	1·0	+ 0·05
Cincinnati	·79	4	·909	·901	0·5	+ 6	45·76	·88	0·5	0·00
Pulkowa	·76	3	·833	·862	0·3	— 33	46·02	46·31	0·6	+ 0·43
Greenwich	90·06	5	·957	·935	1·0	+ 40	44·95	45·33	0·7	— 0·55
Cambridge (Eng.)	89·73	3	·910	·853	0·5	— 42	46·20	46·04	0·4	+ 0·16
Dublin	·86	3	·839	·830	0·8	— 65	46·16	45·61	0·5	— 0·27
Leipzig	·80	8	·956	·910	1·8	+ 15	46·41	46·00	1·1	+ 0·12
Vienna	·79	2	·910	·886	0·5	— 9	45·73	45·46	0·2	— 0·42
Cambridge (Mass.)	·89	2	33·110	·957	0·4	+ 62	44·04	·40	0·2	— 0·48
Oxford	90·77	3	32·937	·895	0·7	0	46·15	·67	0·7	— 0·21
[1] w. 3½										

Digitized by Google

Observatory	Epoch	No. obs.	Right Ascension obs.	Right Ascension red.	W.	Diff.	Declination obs.	Declination red.	W.	Diff.
			h m				° ′			
p 6·0			0 52				18 5			
Berlin	89·88	11	s 5·002	s ·002	11·6	— s 0·013	44″·37	44″·37	4·1	+ ″0·13
Cape	·84	13, 14	·020	·023	3·3	+ 8	44·52	·00	3·1	— 0·24
Melbourne	·75	7 [1]	·028	·041	2·2	+ 26	45·91	·24	1·3	0·00
Cincinnati	·78	7	4·982	·010	0·8	— 5	43·98	·10	0·8	— 0·14
Pulkowa	·76	8	·954	·999	0·5	— 16	43·92	·01	1·0	— 0·23
Greenwich	90·43 ·47	7, 8	5·001	·032	1·2	+ 17	43·36	43·74	1·0	— 0·50
Cambridge (Eng.)	89·78	4	·074	·078	0·6	+ 63	44·56	44·40	0·5	+ 0·16
Dublin	·89	5	4·978	·010	1·4	— 5	44·98	·63	1·5	+ 0·39
Leipzig	·78	15	5·048	·026	2·7	+ 11	44·59	·41	1·4	+ 0·17
Washington	·74	1	·131	·081	0·5	+ 66	45·29	·75	0·1	+ 0·51
Vienna	·71	1	·108	·071	0·3	+ 56	45·12	·85	0·1	+ 0·61
Cambridge (Mass.)	·86	3	·028	·995	0·6	— 20	42·56	43·92	0·2	— 0·32
Oxford	·73	3	·021	·976	0·7	— 39	44·57	44·31	0·7	+ 0·07
			h m				° ′			
q 8·5			0 53				14 0			
Berlin	89·73	5	s 53·724	s ·724	7·2	— s 0·003	37″·86	37″·86	2·9	— ″0·09
Cape	·74	4	·817	·763	1·3	+ 36	38·65	38·13	1·3	+ 0·18
Melbourne	·73	4, 5 [1]	·717	·728	1·2	+ 1	39·73	·06	0·8	+ 0·11
Cincinnati	·72	3	·798	·786	0·4	+ 59	38·17	·29	0·4	+ 0·34
Pulkowa	·76	4	·712	·739	0·4	+ 12	37·55	37·87	0·7	— 0·08
Greenwich	·94	2	·746	·717	0·5	— 10	37·03	·41	0·4	— 0·54
Cambridge (Eng.)	·73	3	·816	·751	0·5	+ 24	38·54	38·38	0·4	+ 0·43
Dublin	·84	2	·686	·671	0·6	— 56	38·24	37·65	0·4	— 0·30
Leipzig	·71	4	·720	·671	1·1	— 56	38·14	·69	0·7	+ 0·26
Leiden	·72	1	·752	·754	1·3	+ 27	38·90	38·55	0·5	+ 0·60
Bordeaux	·85	1	·590	·593	0·1	— 134	40·40	39·49	0·1	+ 1·54
Washington	·76	2	·821	·742	1·0	+ 15	38·49	37·95	0·2	0·00
Vienna	·86	2	·843	·820	0·5	+ 94	38·20	·93	0·2	— 0·02
Cambridge (Mass.)	·84	3	·823	·654	0·6	— 73	36·40	·76	0·2	— 0·19
Oxford	91·42	3	·750	·709	0·7	— 18	38·21	·70	0·7	— 0·25
[1] R.A. w. 3, Dec. w. 3½										
			h m				° ′			
r 8·2			0 55				10 34			
Berlin	89·85	7	s 25·578	s ·578	9·0	— s 0·002	58″·76	58″·76	3·4	— ″0·11
Cape	·74	4	·654	·607	1·3	+ 27	59·48	·96	1·3	+ 0·09
Melbourne	·84	3	·602	·613	1·2	+ 33	61·07	59·40	0·7	+ 0·53
Cincinnati	·71	3	·665	·657	0·4	+ 77	58·53	58·65	0·4	— 0·22
Pulkowa	·77	4	·570	·599	0·4	+ 19	58·99	59·28	0·7	+ 0·41

Digitized by Google

Observatory	Epoch	No. obs.	Right Ascension obs.	Right Ascension red.	W.	Diff.	Declination obs.	Declination red.	W.	Diff.
			h m				° ′			
r—*cont.*			0 55				10 34			
Greenwich	89·76	4	s 25·563	s ·541	0·9	— s 0·039	″ 58·41	″ 58·79	0·6	— ″ 0·08
Cambridge (Eng.)	·72	2	·616	·559	0·3	— 21	58·98	·82	0·3	— 0·05
Dublin	·90	2	·554	·545	0·6	— 35	59·06	·51	0·4	— 0·36
Leipzig	·71	4	·597	·551	1·1	— 29	58·87	·45	0·7	— 0·42
Leiden	·79	1	·557	·558	1·3	— 22	59·88	59·53	0·5	+ 0·66
Bordeaux	·82	2	·635	·643	0·2	+ 63	60·75	·84	0·3	+ 0·97
Washington	·76	1	·616	·541	0·5	— 39	59·24	58·70	0·1	— 0·17
Vienna	·84	1	·667	·643	0·3	+ 63	59·55	59·28	0·1	+ 0·41
Cambridge (Mass.)	·84	3	·755	·602	0·6	+ 22	57·38	58·74	0·2	— 0·13
Oxford	91·49	3	·625	·583	0·7	+ 3	58·78	·30	0·7	— 0·61
			h m				° ′			
m s 8·0 (comb.)			0 55				11 18			
Berlin	89·83	8	s 32·867	s ·867	9·7	+ s 0·014	″ 51·04	″ 51·04	3·6	+ ″ 0·26
Cape	·78	8	·875	·832	2·3	— 21	51·35	50·83	2·2	+ 0·05
Melbourne	·80	5 [1]	·831	·842	1·7	— 11	52·11	·44	1·0	— 0·34
Cincinnati	·75	4	·865	·861	0·5	+ 8	51·24	51·36	0·5	+ 0·58
Pulkowa	·78	6	·810	·840	0·5	— 13	49·98	50·25	0·8	— 0·53
Greenwich	·76	3	·825	·808	0·7	— 45	50·44	·82	0·5	+ 0·04
Cambridge (Eng.)	·78	4	·834	·783	0·6	— 70	50·39	·23	0·5	— 0·55
Dublin	·87	5, 4	·898	·892	1·1	+ 39	51·83	51·29	0·7	+ 0·51
Leipzig	·73	8	·906	·863	1·8	+ 10	50·99	50·60	1·1	— 0·18
Leiden	·83	1	·833	·833	1·3	— 20	51·04	·69	0·5	— 0·09
Vienna	·79	2	·850	·825	0·5	— 28	50·75	·48	0·2	— 0·30
Cambridge (Mass.)	·85	4	33·008	·866	0·8	+ 13	48·74	·10	0·3	— 0·68
Oxford	91·44	3	32·851	·809	0·7	— 43	50·94	·48	0·7	— 0·34

[1] w. $4\frac{1}{2}$.

At Berlin the optical centre of gravity was purposely observed. The duplicity not being noticed in the other series, the same point, about ″·25 south of the middle, will have been observed throughout.

			h m				° ′			
m t 8·5			0 56				13 39			
Berlin	89·84	8	s 43·492	s ·492	9·7	— s 0·004	″ 17·67	″ 17·67	3·6	+ ″ 0·06
Cape	·82	10	·550	·496	2·7	0	18·01	·49	2·6	— 0·12
Melbourne	·72	6 [1]	·497	·508	1·8	+ 12	19·51	·84	1·1	+ 0·23
Cincinnati	·77	5	·502	·490	0·6	— 6	17·53	·65	0·6	+ 0·04
Pulkowa	·80	2	·485	·512	0·3	+ 16	16·30	16·62	0·4	— 0·99
Greenwich	·87	5	·560	·531	1·0	+ 35	17·27	17·65	0·7	+ 0·04
Cambridge (Eng.)	·78	4	·533	·468	0·6	— 28	18·40	18·24	0·5	+ 0·63
Dublin	·86	3	·533	·518	0·8	+ 22	18·21	17·62	0·5	+ 0·01
Leipzig	·73	10	·539	·490	2·1	— 6	18·01	·56	1·3	— 0·05

Digitized by Google

Observatory	Epoch	No. obs.	Right Ascension obs.	Right Ascension red.	W.	Diff.	Declination obs.	Declination red.	W.	Diff.
			h m				° ′			
t—*cont.*			0 56				13 39			
Washington	89·74	1	s 43·571	·492	0·5	— s 0·004	″ 18·49	17·95	0·1	+ ″ 0·34
Vienna	·72	1	·470	·447	0·3	— 49	17·91	·64	0·1	+ 0·03
Cambridge (Mass.)	·85	1	·730	·561	0·2	+ 65	15·72	·08	0·1	— 0·53
: weight = 5 obs.										
			h m				° ′			
m u 8·5			0 57				15 32			
Berlin	89·81	5	s 9·626	·626	7·2	— s 0·016	″ 26·99	26·99	2·9	+ ″ 0·08
Cape	·82	6	·725	·671	1·8	+ 29	27·33	·81	1·8	— 0·10
Melbourne	·85	3	·620	·631	1·2	— 11	28·35	·68	0·7	— 0·22
Cincinnati	·76	3	·638	·626	0·4	— 16	27·13	27·25	0·4	+ 0·34
Pulkowa	·76	1	·500	·527	0·2	— 115	27·00	·32	0·3	+ 0·41
Greenwich	90·48	3	·707	·678	0·7	+ 37	26·94	·32	0·5	+ 0·49
Cambridge (Eng.)	89·76	3	·707	·642	0·5	0	26·75	26·59	0·4	— 0·32
Dublin	·94	2	·655	·640	0·6	— 2	26·57	25·98	0·4	— 0·90
Leipzig	·73	6	·690	·641	1·5	— 1	27·13	26·68	1·0	— 0·24
Leiden	·72	1	·648	·650	1·3	+ 8	27·29	·94	0·5	+ 0·02
Washington	·80	1	·729	·650	0·5	+ 8	27·06	·52	0·1	— 0·39
Vienna	·84	1	·736	·713	0·3	+ 72	27·83	27·56	0·1	+ 0·66
Oxford	91·52	3	·747	·706	0·7	+ 67	27·60	·09	0·7	+ 0·39
			h m				° ′			
m v 7·8			0 57				12 27			
Berlin	89·92	6	s 16·351	·351	8·1	+ s 0·003	″ 10·10	10·10	3·2	+ ″ 0·02
Cape	·86	8	·381	·343	2·3	— 5	10·59	·07	2·2	— 0·01
Melbourne	·76	4	·349	·360	1·5	+ 12	12·22	·55	0·9	+ 0·46
Cincinnati	·79	4	·322	·321	0·5	— 27	9·86	9·98	0·5	— 0·11
Pulkowa	·74	3	·290	·322	0·3	— 26	9·85	10·11	0·6	+ 0·02
Greenwich	90·45	5	·362	·350	1·0	+ 4	9·59	9·97	0·7	— 0·09
Cambridge (Eng.)	89·73	2	·384	·338	0·3	— 10	10·44	10·28	0·3	+ 0·19
Dublin	·86	2	·334	·332	0·6	— 16	10·74	·22	0·4	+ 0·14
Leipzig	·80	11	·381	·340	2·2	— 8	10·44	·07	1·3	— 0·02
Bordeaux	·85	1	·410	·424	0·1	+ 76	10·90	9·99	0·1	— 0·08
Vienna	·84	3	·349	·323	0·7	— 25	10·37	10·10	0·3	+ 0·01
Cambridge (Mass.)	·95	2	·535	·404	0·4	+ 56	7·61	8·97	0·2	— 1·11
Oxford	90·88	3	·403	·361	0·7	+ 16	10·21	9·77	0·7	— 0·27
			h m				° ′			
m w 8·7			0 58				13 20			
Berlin	89·75	4	s 0·516	·516	6·1	— s 0·003	″ 26·92	26·92	2·5	+ ″ 0·20
Cape	·76	4	·553	·494	1·3	— 25	26·62	·10	1·3	— 0·62
Melbourne	·87	3	·492	·502	1·2	— 17	28·70	27·03	0·7	+ 0·31

Digitized by Google

Observatory	Epoch	No. obs.	Right Ascension obs.	Right Ascension red.	W.	Diff.	Declination obs.	Declination red.	W.	Diff.
			h m				° ′			
w—*cont.*			0 58				13 20			
			s	s		s	″	″		″
Cincinnati	89·79	3	0·535	·519	0·4	0·000	26·53	26·65	0·4	— 0·07
Pulkowa	·77	3	·450	·475	0·3	— 44	26·37	·71	0·6	— 0·01
Greenwich	90·84	1	·681	·647	0·3	+ 131	26·35	·73	0·2	+ 0·03
Cambridge (Eng.)	89·74	2	·644	·573	0·3	+ 54	27·04	·88	0·3	+ 0·16
Dublin	·79	1	·459	·440	0·3	— 79	27·75	27·14	0·2	+ 0·42
Leipzig	·74	4	·643	·592	1·1	+ 73	27·32	26·85	0·7	+ 0·13
Leiden	·79	1	·521	·523	1·3	+ 4	26·94	·59	0·5	— 0·13
Cambridge (Mass.)	·85	2	·750	·570	0·4	+ 51	24·89	·25	0·2	— 0·47
Oxford	91·92	3	·484	·443	0·7	— 69	27·33	·80	0·7	+ 0·13
			h m				° ′			
x m 6·0			0 59				14 20			
			s	s			″	″		″
Berlin	89·85	8	13·762	·762	9·7	+ 0·008	56·23	56·23	3·6	+ 0·07
Cape	·80	14	·745	·749	3·4	— 5	56·57	·05	3·1	— 0·11
Melbourne	·81	7, 8	·718	·731	2·3	— 23	57·84	·17	1·5	+ 0·01
Cincinnati	·77	7	·756	·784	0·8	+ 30	55·72	55·84	0·8	— 0·32
Pulkowa	·78	7	·637	·682	0·5	— 72	56·31	56·40	0·9	+ 0·24
Greenwich	{·73 ·64}	7, 8	·734	·765	1·2	+ 11	55·37	55·75	1·0	— 0·40
Cambridge (Eng.)	·75	6	·802	·806	0·8	+ 52	55·97	·81	0·6	— 0·34
Dublin	·81	5	·721	·753	1·4	— 1	56·50	56·15	1·5	— 0·01
Leipzig	·78	15	·761	·739	2·7	— 15	56·27	·09	1·4	— 0·07
Leiden	·83	1	·772	·766	1·3	+ 12	56·84	·49	0·5	+ 0·36
Bordeaux	·83	1	·800	·844	0·1	+ 90	56·90	55·99	0·1	— 0·17
Washington	·73	1	·784	·734	0·5	— 20	57·12	56·58	0·1	+ 0·43
Vienna	·84	3	·791	·754	0·7	0	57·09	·82	0·3	+ 0·66
Cambridge (Mass.)	·84	4	·775	·742	0·8	— 12	55·92	57·28	0·3	+ 1·12
Oxford	91·02	3	·789	·744	0·7	— 9	56·66	56·40	0·7	+ 0·18
			h m				° ′			
y* m 9·0			0 59				14 23			
			s	s		s	″	″		″
Berlin	89·85	5	56·972	·972	7·2	— 0·009	15·33	15·33	2·9	— 0·05
Cape	·80	10	57·021	·956	2·7	— 25	15·95	·43	2·6	+ 0·05
Melbourne	·86	5[1]	·016	·026	1·8	+ 45	17·26	·59	1·0	+ 0·21
Cincinnati	·75	5	·062	·041	0·6	+ 61	14·63	14·75	0·6	— 0·63
Pulkowa	·79	1	56·930	·953	0·2	— 28	14·20	·56	0·3	— 0·82
Greenwich	·75	6	57·000	·959	1·1	— 22	15·27	15·65	0·8	+ 0·27
Cambridge (Eng.)	·76	5	·080	·001	0·7	+ 20	16·16	16·00	0·5	+ 0·62
Dublin	·86	2	·014	·989	0·6	+ 8	16·12	15·49	0·4	+ 0·11
Leipzig	·78	9	·041	·987	2·0	+ 6	15·60	·10	1·2	— 0·28
Washington	·73	1	·024	·939	0·5	— 41	15·72	·18	0·1	— 0·20
Vienna	·72	1	·128	·108	0·3	+ 127	15·78	·51	0·1	+ 0·13
Cambridge (Mass.)	·92	3	·160	·963	0·6	— 17	14·44	·80	0·2	+ 0·42
Oxford	91·15	3	·024	·984	0·7	+ 3	15·87	·31	0·7	— 0·07

[1] Dec. w. $4\frac{1}{2}$

Digitized by Google

Observatory	Epoch	No. obs.	Right Ascension		W.	Diff.	Declination		W.	Diff.
			obs.	red.			obs.	red.		
m y 7·7			h m 1 0				o ′ 14 47			
Berlin	89·86	5	s 4·350	s ·350	7·2	+ s 0·007	″ 23·25	″ 23·25	2·9	— ″ 0·21
Cincinnati	·85	4	·277	·278	0·5	— 65	23·54	·66	0·5	+ 0·20
Pulkowa	·82	2	·355	·387	0·3	+ 44	23·25	·50	0·6	+ 0·04
Dublin	·91	2	·315	·315	0·6	— 28	24·58	24·07	0·4	+ 0·61
Leipzig	·81	8	·375	·335	1·8	— 8	24·04	23·68	1·1	+ 0·22
m z 8·5			h m 1 0				o ′ 15 48			
Berlin	89·83	5	s 29·585	s ·585	7·2	+ s 0·008	″ 9·69	″ 9·69	2·9	— ″ 0·24
Cape	·74	4	·589	·535	1·3	— 42	10·36	·84	1·3	— 0·10
Melbourne	·72	3	·585	·596	1·2	+ 19	12·04	10·37	0·7	+ 0·43
Cincinnati	·78	3	·588	·576	0·4	— 1	10·05	·17	0·4	+ 0·23
Pulkowa	·72	1	·680	·707	0·2	+ 130	8·45	8·77	0·3	— 1·17
Greenwich	·84	4	·608	·579	0·9	+ 2	9·50	9·88	0·6	— 0·05
Cambridge (Eng.)	·77	2	·629	·564	0·3	— 13	9·94	·78	0·3	— 0·16
Dublin	·94	2	·592	·577	0·6	0	9·84	·25	0·4	— 0·67
Leipzig	·71	4	·595	·546	1·1	— 31	11·14	10·70	0·7	+ 0·76
Washington	·74	1	·631	·552	0·5	— 25	10·09	9·55	0·1	— 0·39
Vienna	·94	1	·578	·555	0·3	— 22	10·86	10·59	0·1	+ 0·66
Oxford	90·90	3	·633	·592	0·7	+ 15	11·20	10·69	0·7	+ 0·83
m a 8·0			h m 1 1				o ′ 15 16			
Berlin	89·86	8	s 59·509	s ·509	9·7	— s 0·006	″ 15·08	″ 15·08	3·6	+ ″ 0·06
Cape	·84	10	·574	·532	2·7	+ 17	15·43	14·91	2·6	— 0·11
Melbourne	·76	7, 6[1]	·519	·530	2·1	+ 15	16·66	·99	1·1	— 0·03
Cincinnati	·76	5	·548	·544	0·6	+ 29	14·96	15·08	0·6	+ 0·06
Pulkowa	·75	5	·400	·430	0·5	— 86	14·99	·26	0·8	+ 0·23
Greenwich	·89	5	·571	·554	1·0	+ 39	14·80	·18	0·7	+ 0·16
Cambridge (Eng.)	·74	6	·490	·439	0·8	— 77	14·94	14·78	0·6	— 0·25
Dublin	·79	3	·493	·487	0·8	— 28	15·98	15·44	0·5	+ 0·42
Leipzig	·75	10	·547	·504	2·1	— 12	15·30	14·91	1·3	— 0·12
Leiden	·72	1	·544	·544	1·3	+ 28	15·04	·69	0·5	— 0·34
Bordeaux	·83	2	·460	·471	0·2	— 44	16·25	15·34	0·3	+ 0·32
Washington	·80	1	·619	·546	0·5	+ 31	15·46	14·92	0·1	— 0·10
Vienna	·79	2	·486	·461	0·5	— 54	14·90	·63	0·2	— 0·39
Cambridge (Mass.)	·80	2	·745	·603	0·4	+ 88	14·91	16·27	0·2	+ 1·25
Oxford	91·55	3	·578	·536	0·7	+ 28	15·17	14·71	0·7	— 0·25

[1] R.A. w. 6, Dec. w. 5½

Digitized by Google

Observatory	Epoch	No. obs.	Right Ascension		W.	Diff.	Declination		W.	Diff.
			obs.	red.			obs.	red.		
β 8m·0			1h 2m				16° 49′			
Berlin	89·86	5	2s·103	s·103	7·2	— 0s·013	10″·54	10″·54	2·9	— 0″·10
Cape	·84	4	·176	·133	1·3	+ 17	11·31	·79	1·3	+ 0·15
Melbourne	·82	3	·130	·141	1·2	+ 25	12·06	·39	0·7	— 0·25
Cincinnati	·77	3	·112	·108	0·4	— 8	11·33	11·45	0·4	+ 0·81
Pulkowa	·77	3	·057	·087	0·3	— 29	9·73	10·00	0·6	— 0·64
Greenwich	{90·58 ·62}	4, 5	·118	·101	0·9	— 15	9·85	·23	0·6	— 0·41
Cambridge (Eng.)	89·77	3	·233	·182	0·5	+ 66	10·59	·43	0·4	— 0·21
Dublin	·86	2	·118	·112	0·6	— 4	11·36	·82	0·4	+ 0·18
Leipzig	·77	5	·164	·121	1·3	+ 5	11·49	11·10	0·9	+ 0·46
Vienna	·84	1	·182	·157	0·3	+ 41	11·41	·14	0·1	+ 0·50
Cambridge (Mass.)	·83	2	·262	·120	0·4	+ 4	9·91	·27	0·2	+ 0·63
Oxford	91·59	3	·177	·135	0·7	+ 19	11·08	10·62	0·7	— 0·02
γ 8m·6			1h 2m				17° 3′			
Berlin	89·85	9	34s·850	s·850	10·4	+ 0s·003	40″·77	40″·77	3·8	— 0″·02
Cape	·85	8	·871	·815	2·3	— 32	41·24	·72	2·2	— 0·07
Melbourne	·84	4	·851	·861	1·5	+ 14	42·29	·62	0·9	— 0·17
Cincinnati	·75	4	·860	·846	0·5	— 1	40·41	·53	0·5	— 0·26
Pulkowa	·82	2	·710	·736	0·3	— 111	41·00	41·33	0·4	+ 0·54
Greenwich	90·86	3	·891	·860	0·7	+ 13	40·47	40·85	0·5	+ 0·12
Cambridge (Eng.)	89·77	4	·934	·866	0·6	+ 19	40·44	·28	0·5	— 0·51
Dublin	{·83 ·86}	5, 4	·878	·861	1·1	+ 14	41·23	·63	0·7	— 0·15
Leipzig	·75	8	·892	·842	1·8	— 5	41·46	41·00	1·1	+ 0·21
Leiden	·83	1	·860	·862	1·3	+ 15	41·27	40·92	0·5	+ 0·13
Bordeaux	·81	1	·870	·871	0·1	+ 24	40·70	39·79	0·1	— 1·00
Vienna	·87	1	·838	·816	0·3	— 31	41·14	40·87	0·1	+ 0·09
Cambridge (Mass.)	·88	2	35·040	·865	0·4	+ 18	39·75	41·11	0·2	+ 0·33
Oxford	91·12	3	34·907	·866	0·7	+ 19	41·62	·10	0·7	+ 0·38
δ 6m·4			1h 4m				15° 4′			
Berlin	89·82	5	18s·296	s·296	7·2	+ 0s·002	58″·53	58″·53	2·9	— 0″·12
Cape	·74	4	·259	·253	1·3	— 40	59·86	59·34	1·3	+ 0·69
Melbourne	·72	3	·262	·275	1·2	— 19	59·92	58·25	0·7	— 0·40
Cincinnati	·76	3	·243	·265	0·4	— 29	58·28	·40	0·4	— 0·25
Pulkowa	·76	4	·307	·349	0·4	+ 55	57·94	·07	0·7	— 0·58
Greenwich	{90·16 ·45}	4, 5	·292	·313	0·9	+ 19	58·03	·41	0·7	— 0·24
Cambridge (Eng.)	89·75	4	·320	·313	0·6	+ 19	59·08	·92	0·5	+ 0·27
Dublin	·86	3	·292	·317	1·1	+ 23	58·92	·53	1·0	— 0·12
Leipzig	·72	4	·317	·290	1·1	— 4	59·38	59·16	0·7	+ 0·51
Bordeaux	·83	1	·330	·367	0·1	+ 73	59·90	58·99	0·1	+ 0·35

Digitized by Google

Observatory	Epoch	No. obs.	Right Ascension		W.	Diff.	Declination		W.	Diff.
			obs.	red.			obs.	red.		
			h m				° ′			
δ—cont.			1 4				15 4			
Washington	89·76	1	s 18·316	·261	0·5	— s 0·033	″ 58·64	58·10	0·1	— ″ 0·55
Vienna	·79	2	·290	·255	0·5	— 39	58·73	·46	0·2	— 0·19
Oxford	·77	3	·380	·335	0·7	+ 41	59·06	·76	0·7	+ 0·11
			h m				° ′			
m ε 8·8			1 5				17 48			
Berlin	89·88	5	s 3·785	·785	7·2	— s 0·007	″ 5·73	5·73	2·9	— ″ 0·39
Cape	·78	4	·829	·768	1·3	— 24	6·87	6·35	1·3	+ 0·23
Melbourne	·80	3, 4[1]	·817	·827	1·0	+ 35	7·89	·22	0·7	+ 0·10
Cincinnati	·81	4	·795	·778	0·5	— 14	6·47	·59	0·5	+ 0·47
Pulkowa	·76	2	·920	·945	0·3	+ 153	5·62	5·97	0·4	— 0·15
Greenwich	·74	3	·812	·776	0·7	— 016	6·32	6·70	0·5	+ 0·58
Cambridge (Eng.)	·73	3	·887	·813	0·5	+ 22	5·86	5·70	0·4	— 0·42
Dublin	·86	2	·714	·693	0·6	— 99	6·74	6·13	0·4	+ 0·01
Leipzig	·74	4	·837	·785	1·1	— 7	7·28	·80	0·7	+ 0·68
Leiden	·79	1	·783	·786	1·3	— 6	6·17	5·82	0·5	— 0·30
Vienna	·84	1	·815	·794	0·3	+ 2	6·07	·80	0·1	— 0·32
Cambridge (Mass.)	·86	3	·972	·786	0·6	— 6	4·35	·71	0·2	— 0·41
Oxford	91·50	3	·955	·914	0·7	+ 123	6·96	6·42	0·7	+ 0·31
[1] R.A. w. 2½, Dec. w. 3										
			h m				° ′			
m ζ 8·5			1 5				16 11			
Berlin	89·89	9	s 10·193	·193	10·4	+ s 0·008	″ 11·99	11·99	3·8	— ″ 0·04
Cape	·82	10	·234	·180	2·7	— 5	12·47	·95	2·6	— 0·08
Melbourne	·86	5	·124	·135	1·8	— 50	13·44	·77	1·1	— 0·26
Cincinnati	·75	5	·228	·216	0·6	+ 31	12·54	12·66	0·6	+ 0·63
Pulkowa	·76	4	·180	·207	0·4	+ 22	11·56	11·88	0·7	— 0·15
Greenwich	·83	5	·203	·174	1·0	— 11	11·69	12·07	0·7	+ 0·04
Cambridge (Eng.)	·78	3	·300	·235	0·5	+ 50	11·85	11·69	0·4	— 0·34
Dublin	·84	4	·186	·171	0·9	— 14	12·82	12·23	0·7	+ 0·20
Leipzig	·77	12	·212	·163	2·3	— 22	12·43	11·98	1·3	— 0·05
Leiden	·83	1	·224	·226	1·3	+ 41	12·99	12·64	0·5	+ 0·61
Washington	·80	1	·269	·190	0·5	+ 5	12·16	11·62	0·1	— 0·41
Vienna	·82	2	·198	·175	0·5	— 10	12·51	12·24	0·2	+ 0·21
Cambridge (Mass.)	·87	3	·352	·183	0·6	— 2	11·47	·83	0·2	+ 0·80
			h m				° ′			
m η 8·2			1 5				14 6			
Berlin	89·84	8	s 24·021	·021	9·7	+ s 0·001	″ 4·99	4·99	3·6	— ″ 0·03
Cape	·83	8	·072	·025	2·3	+ 5	5·36	·84	2·2	— 0·18
Melbourne	·76	4	·005	·016	1·5	— 5	6·77	5·10	0·9	+ 0·08
Cincinnati	·78	4	23·964	·956	0·5	— 65	5·10	·22	0·5	+ 0·20
Pulkowa	·82	3	·940	·969	0·3	— 51	5·00	·29	0·6	+ 0·27

Digitized by Google

Observatory	Epoch	No. obs.	Right Ascension obs.	Right Ascension red.	W.	Diff.	Declination obs.	Declination red.	W.	Diff.
			h m				° ′			
η—cont.			1 5				14 6			
Greenwich	90·52	6	s 24·062	s ·040	1·1	+ s 0·024	″ 3·81	″ 4·19	0·8	— ″ 0·81
Cambridge (Eng.)	89·81	3	·077	·020	0·5	00	5·74	5·58	0·4	+ 0·56
Dublin	·88	3	·027	·018	0·8	— 2	6·33	·78	0·5	+ 0·76
Leipzig	·78	9	·077	·031	2·0	+ 11	5·43	·01	1·2	0·00
Vienna	·79	2	·026	·002	0·5	— 18	6·70	6·43	0·2	+ 1·41
Cambridge (Mass.)	·91	3	·170	·017	0·6	— 3	3·48	4·84	0·2	— 0·18
			h m				° ′			
θ m 8·5			1 6				16 10			
Berlin	89·81	6	s 55·731	s ·731	8·1	— s 0·013	″ 29·12	″ 29·12	3·2	+ ″ 0·03
Cape	·80	7	·827	·773	2·1	+ 29	29·56	·04	2·0	— 0·05
Melbourne	·86	3	·767	·778	1·2	+ 34	30·96	·29	0·7	+ 0·20
Cincinnati	·75	3	·732	·720	0·4	— 24	28·87	28·99	0·4	— 0·10
Pulkowa	·78	3	·670	·697	0·3	— 47	28·97	29·29	0·6	+ 0·20
Greenwich	{90·56 ·61}	3, 4	·769	·740	0·7	— 4	28·19	28·57	0·6	— 0·52
Cambridge (Eng.)	89·76	3	·853	·788	0·5	+ 44	28·79	·63	0·4	— 0·46
Dublin	·86	2	·792	·777	0·6	+ 33	29·41	·82	0·4	— 0·27
Leipzig	·72	4	·802	·753	1·1	+ 9	30·18	29·73	0·7	+ 0·64
Leiden	·72	1	·716	·718	1·3	— 26	29·46	·11	0·5	+ 0·02
Bordeaux	·75	1	·690	·693	0·1	— 51	29·50	28·59	0·1	— 0·50
Washington	·80	1	·839	·760	0·5	+ 16	29·36	·82	0·1	— 0·27
Vienna	·78	2	·805	·782	0·5	+ 38	28·87	·60	0·2	— 0·49
Cambridge (Mass.)	·82	3	·902	·733	0·6	— 11	28·39	29·75	0·2	+ 0·66
			h m				° ′			
ι m 6·0			1 8				15 32			
Berlin	89·81	10	s 13·823	s ·823	11·0	— s 0·009	″ 44·61	″ 44·61	4·0	— ″ 0·14
Cape	·78	8	·851	·854	2·3	+ 22	45·18	·66	2·2	— 0·09
Melbourne	·76	5, 3	·816	·829	1·8	— 3	46·58	·91	0·7	+ 0·16
Cincinnati	·71	3	·797	·825	0·4	— 7	44·60	·72	0·4	— 0·03
Pulkowa	·76	6	·748	·793	0·5	— 39	44·72	·81	0·8	+ 0·06
Greenwich	90·37	4	·808	·839	0·9	+ 9	44·35	·73	0·6	— 0·02
Cambridge (Eng.)	89·78	7	·789	·793	0·9	— 39	45·24	45·08	0·6	+ 0·33
Dublin	·83	4	·813	·845	1·2	+ 13	45·12	44·77	1·3	+ 0·02
Leipzig	·77	6	·837	·815	1·5	— 17	45·18	45·00	1·0	+ 0·25
Leiden	·81	2	·873	·868	2·5	+ 36	44·93	44·58	1·0	— 0·17
Bordeaux	·82	2	·805	·849	0·2	+ 17	46·00	45·09	0·3	+ 0·34
Washington	·76	1	·866	·816	0·5	— 16	45·44	44·93	0·1	+ 0·18
Vienna	·88	2, 3	·853	·816	0·5	— 16	45·09	·82	0·3	+ 0·07
Oxford	90·81	3	·940	·895	0·7	+ 66	45·26	45·00	0·7	+ 0·26

Digitized by Google

Observatory	Epoch	No. obs.	Right Ascension		W.	Diff.	Declination		W.	Diff.
			obs.	red.			obs.	red.		
	m		h m				° ′			
κ 8·3			1 10				17 2			
Berlin	89·87	10	s 15·769	·769	11·0	+ s 0·006	″ 53·03	″ 53·03	4·0	— ″ 0·21
Cape	·77	8	·804	·755	2·3	— 8	53·91	·39	2·2	+ 0·15
Melbourne	·77	4 [1]	·728	·739	1·4	— 24	54·72	·05	0·7	— 0·19
Cincinnati	·74	4	·826	·817	0·5	+ 54	52·94	·06	0·5	— 0·18
Pulkowa	·80	7	·739	·767	0·5	+ 4	53·29	·59	0·9	+ 0·35
Greenwich	·79	5	·780	·756	1·0	— 7	53·19	·57	0·7	+ 0·33
Cambridge (Eng.)	·78	6	·840	·780	0·8	+ 17	53·02	52·86	0·6	— 0·38
Dublin	·86	6	·758	·747	1·2	— 16	53·84	53·27	0·9	+ 0·03
Leipzig	·78	9	·820	·773	2·0	+ 10	53·84	·42	1·2	+ 0·18
Bordeaux	·81	1	·870	·876	0·1	+ 113	53·60	52·69	0·1	— 0·54
Washington	·74	1	·831	·755	0·5	— 8	53·59	53·05	0·1	— 0·19
Vienna	·88	3	·700	·676	0·7	— 87	53·55	·28	0·3	+ 0·04
Cambridge (Mass.)	·85	3	·898	·740	0·6	— 23	51·85	·21	0·2	— 0·03
Oxford	90·81	3	·832	·791	0·7	+ 28	54·01	·52	0·7	+ 0·28
[1] R.A. w. 3½, Dec. w. 3										
	m		h m				° ′			
λ 8·8			1 11				15 46			
Berlin	89·86	12	s 34·309	·309	12·2	— s 0·016	″ 7·29	″ 7·29	4·2	— ″ 0·14
Cape	·78	7	·406	·345	2·1	+ 20	7·84	·32	2·0	— 0·11
Melbourne	·73	3 [1]	·368	·378	1·0	+ 53	9·07	·40	0·6	— 0·03
Cincinnati	·74	4	·317	·300	0·5	— 25	7·44	·56	0·5	+ 0·13
Pulkowa	·76	4	·267	·292	0·4	— 33	7·00	·35	0·7	— 0·08
Greenwich	{·84 ·83}	3 [1]	·421	·385	0·6	+ 60	6·29	6·67	0·5	— 0·76
Cambridge (Eng.)	·76	5	·461	·387	0·7	+ 62	7·79	7·63	0·5	+ 0·20
Dublin	·84	6	·358	·337	1·2	+ 12	8·93	8·32	0·9	+ 0·89
Leipzig	·75	7	·360	·308	1·7	— 17	8·07	7·59	1·1	+ 0·16
Leiden	·83	1	·355	·358	1·3	+ 33	7·84	·49	0·5	+ 0·06
Bordeaux	·83	1	·360	·358	0·1	+ 33	8·20	·29	0·1	— 0·14
Washington	·76	2	·432	·350	1·0	+ 25	8·04	·50	0·2	+ 0·07
Vienna	·86	2	·379	·358	0·5	+ 33	7·60	·33	0·2	— 0·10
Cambridge (Mass.)	·90	3	·498	·312	0·6	— 13	6·70	8·06	0·2	+ 0·63
Oxford	91·51	3	·357	316	0·7	— 9	7·90	7·36	0·7	— 0·07
[1] w. = 2½ obs.										
	m		h m				° ′			
μ 8·0			1 12				17 59			
Berlin	89·92	10	s 26·022	·022	11·0	— s 0·009	″ 31·45	″ 31·45	4·0	— ″ 0·06
Cape	·78	8	·086	·044	2·3	+ 13	31·99	·47	2·2	— 0·04
Melbourne	·72	3	·062	·073	1·2	+ 42	33·03	·36	0·7	— 0·15
Cincinnati	·73	4	·014	·010	0·5	— 21	31·44	·56	0·5	+ 0·05

Digitized by Google

Observatory	Epoch	No. obs.	Right Ascension obs.	Right Ascension red.	W.	Diff.	Declination obs.	Declination red.	W.	Diff.
			h m				° ′			
μ—cont.			1 12				17 59			
			s	s		s	″	″		″
Pulkowa	89·76	6	25·987	·017	0·5	— 0·014	31·12	31·39	0·8	— 0·12
Greenwich	·89	3	26·051	·034	0·7	+ 3	31·78	32·16	0·5	+ 0·65
Cambridge (Eng.)	·78	8	·092	·041	0·9	+ 10	31·46	31·30	0·6	— 0·21
Dublin	·84	8	·022	·016	1·3	— 15	31·64	·10	1·1	— 0·41
Leipzig	·74	7	·047	·004	1·7	— 27	32·31	·92	1·1	+ 0·41
Leiden	·79	1	·025	·025	1·3	— 6	32·07	·72	0·5	+ 0·21
Bordeaux	·85	1	·080	·091	0·1	+ 60	32·00	·09	0·1	— 0·42
Washington	·76	1	·096	·023	0·5	— 8	31·94	·40	0·1	— 0·11
Vienna	·79	2	·066	·041	0·5	+ 11	32·68	32·41	0·2	+ 0·90
Cambridge (Mass.)	·85	4	·161	·019	0·8	— 12	30·33	31·69	0·3	+ 0·18
Oxford	·81	3	·098	·056	0·7	+ 25	32·05	·59	0·7	+ 0·08
	m		h m				° ′			
C	7·0		1 17				10 47			
			s	s		s	″	″		″
Berlin	89·85	35	2·166	2·166	17·9	— 0·005	13·35	13·35	5·4	+ 0·07
Cape	·80	49	·195	·175	7·1	+ 4	13·86	·34	5·7	+ 0·06
Melbourne	·80	28	·160	·172	5·5	+ 1	14·79	·12	2·6	— 0·16
Cincinnati	·76	21	·155	·167	2·2	— 4	13·49	·61	2·2	+ 0·33
Pulkowa	·77	17	·155	·192	0·7	+ 22	13·09	·27	1·2	— 0·01
Greenwich	·80	2	·111	·118	0·7	— 53	13·80	14·18	0·4	+ 0·90
Cambridge (Eng.)	·77	14	·193	·169	1·4	— 2	12·92	12·76	0·7	— 0·52
Dublin	·75	25	·159	·172	2·0	+ 1	13·93	13·49	3·2	+ 0·21
Leipzig	·79	21	·219	·186	4·0	+ 15	13·16	12·87	2·0	— 0·41
Leiden	·78	3	·180	·177	3·5	+ 6	13·00	·65	1·4	— 0·63
Bordeaux	·83	4	·092	·119	0·7	— 52	13·85	·94	0·7	— 0·33
Washington	·76	4	·250	·188	3·1	+ 17	14·28	13·74	0·5	+ 0·46
Vienna	·75	4	·194	·163	0·9	— 8	13·37	·10	0·5	— 0·18
	m		h m				° ′			
D	7·2		1 22				16 30			
			s	s		s	″	″		″
Berlin	89·85	35	25·956	·956	17·9	0·000	16·47	16·47	5·4	+ 0·04
Cape	·80	48	·967	·943	7·1	— 13	16·75	·23	5·7	— 0·20
Melbourne	·80	28	·939	·951	5·5	— 5	18·20	·53	2·6	+ 0·10
Cincinnati	·76	22	·958	·967	2·3	+ 11	16·49	·61	2·2	+ 0·18
Pulkowa	·77	17	·914	·950	0·7	— 6	16·32	·52	1·2	+ 0·09
Greenwich	·84	4	·973	·975	1·2	+ 19	16·53	·91	0·7	+ 0·48
Cambridge (Eng.)	·77	14	·994	·965	1·4	+ 9	16·06	15·90	0·7	— 0·53
Dublin	·85	25	·939	·949	2·0	— 7	17·01	16·55	3·2	+ 0·12
Leipzig	·79	22	·986	·951	4·1	— 5	16·64	·33	2·0	— 0·10
Leiden	·78	3	·964	·962	3·5	+ 6	16·43	·08	1·4	— 0·35
Bordeaux	·83	3, 2	·907	·931	0·5	— 25	17·05	·14	0·4	— 0·28
Washington	·76	4	26·035	·971	3·1	+ 15	17·55	17·01	0·5	+ 0·58
Vienna	·75	4	·024	·994	0·9	+ 38	17·12	16·85	0·5	+ 0·42

Digitized by Google

The means taken from the "reduced" places according to their weights as calculated and ultimately adopted as the mean results of all the observations, give normals, to be designated by (N_3), referred to the system of the A.G.C. as represented by the Berlin series, from which the final normals N_3, given in the summary table of results at the end of this chapter, are derived by adding to the Right Ascensions the correction of the Berlin observer's system = + $0^s{\cdot}0015$ (M − 4·0).

Investigation of Proper Motions.

The catalogue places of the *Sappho* stars were collected, early in 1890, by Dr. de Ball, the precessions computed and the positions brought up to M. Eq. 1889 by the same computer. At his request Mr. Bossert had communicated the new positions reduced from the *Histoire Céleste*, while Lamont's positions from the Munich General Catalogue, and one position from the Second Munich Catalogue, neither of which two catalogues had then been published, were communicated by Dr. Bauschinger, and the unpublished places from the Leipzig zones of the A.G. by Prof. Bruns.

All explanations given for the corresponding table of the *Victoria* stars equally apply to the following table, with one exception concerning the "reduction" of the Declinations. The system of the Berlin Declinations to which the new determinations were reduced being that of the A.G.C., 1875, the Catalogue Declinations were reduced to the same system by the same means as in the case of the *Victoria* stars; the difference only was that the reductions to A.G.C. taken from existing tables based upon direct comparisons, or found from combinations of such comparisons, had to be retained unchanged, as were those taken from the tables, *A. N.* 1536, the difference between the two systems being only small for the Declinations of the *Sappho* stars. To some reductions for Declination which could only be taken from Vol. VII. of the *Bonn Obs.* the systematic correction $-0''{\cdot}7$ was added. For R.A., an accidental difference has been that the systematic correction $-0^s{\cdot}038$ was not applied to the reduction of Piazzi (and Lalande) taken from *Bonn*, Vol. VII.

The proper motions were determined in the same manner as for the *Victoria* stars, the values (N_2) = N_2 + $0^s{\cdot}0015$ (M − 4·0) being used in the comparisons. However, as a much more limited use of proper motions was to be made in the *Sappho* reductions, it was sufficient to compute approximate values whenever a motion was clearly indicated by the compared position, in most of the other cases the motions at once were put = 0, though computation might bring out values of the same order as the majority of those tabulated for the *Victoria* stars. The values of p. m. given with the table are in all cases those communicated to Dr. Gill with the normals N_2.

Digitized by Google

Catalogue Places of Sappho Stars and Comparison with Normals N_2.

Star's Designation and Assumed Proper Motion	Authority	R.A., 1889	Epoch	No. of observations	Reduction to A.G.C.	Reduced R.A. for Epoch	Dec., 1889	Epoch	No. of observations	Reduction to Mean Syst.	Reduced Dec. for Epoch	Outstanding Error	
A		h m s			s	s	° ′ ″			″	″	s	″
	Lal. H.C.	0 31 31·773	1793·9	1	+ ·168	31·94	+10 49 34·47	1793·9	1	−2·91	31·6	−0·10	−0·5
	B. Z. 29	32·438	1821·8	1	— 48	32·39	33·44	1821·8	1	+0·49	33·9	+0·35	+1·9
	Sant. 32	31·865	40 :	3	+ 12	31·88	30·82	40 :	3	+1·64	32·5	−0·16	+0·4
	Lam. 341	31·994	43·9	1	— 60:	93	37·80	43·9	1	−1·2:	36·6	−0·11	+4·6
	Par. 758 (II)	31·910	58·8	1	+ 68:	98	32·25	58·8	1	+0·45:	32·7	−0·06	+0·7
	Schj. 207–8	32·004	62·0	2	+ 59	32·06	32·43	62·0	2	−0·61	31·8	+0·02	−0·2
	Glasg. 164	31·987	69·1	3	+ 40	03	31·49	69·1	3	−0·28	31·2	−0·01	−0·8
	Safford*	32·057	70·0	2			33·13	70·0	2			+0·02	+1·1
	A.G.Z. Leip.	32·037	71·8	2	0	04	31·90	71·8	2	0·00	31·9	0·00	−0·1
	Par. 758 (III)	32·077	79·9	1	+ 68:	14·	32·35	79·9	2	+0·45:	32·8	+0·10·	+0·8
	New Obs.	32·040	89·8			04	32·02	89·8			32·0	0·00	0·0
	* Chicago, *Astr. Nach.* 75, 380.												
B													
−0ˢ·0048	D'Ag. 124–5	0 37 4·922	1784·8	2	+ ·140	5·06	+16 3 31·26	1784·8	2	−2·15	29·1	+0·28	−3·4
−0″·093	Lal. H.C.	4·592	95·9	1	+ 183	4·77·	29·71	95·9	1	−3·14	26·6	+0·03	−4·9
	B. Z. 394	4·472	1828·0	1	+ 2	47	27·09	1828·0	1	+0·49	27·6	−0·10·	−0·7
	Rü. 162	4·324	40:	4	+ 12	34	28·84	40:	4	+0·74	29·6	−0·18	+2·3
	Par. 889 (II)	4·358	58·7	3	+ 68:	43	25·79	58·8	2	+0·45:	26·2	−0·00·	+0·6
	A.G.Z. Berl.	4·450	70·0	2	+ 11	46	24·94	70·0	2	−0·4	24·5	+0·08	0·0
	Arm. II. 101	4·450	78·1	4	+ 36	49	23·06	78·1	4	−0·78	22·3	+0·15	−1·5
	New Obs.	4·282	89·8			28	22·73	89·8			22·7	0·00	0·0
a													
	B. Z. 111	0 42 25·388	1822·8	1	— ·048:	25·34	+ 8 36 55·36	1822·8	1	+0·51	55·9	+0·11	−1·1
	Brünnow*	25·341	59·0				59·26	59·0				+0·11	+2·3
	Yarn. 403	25·297	65·3	2	+ 22	32	56·80	67·4	2	−0·62	56·2	+0·09	−0·8
	Glasg. 212	25·331	75·5	5	+ 47	38	57·00	78·5	3	−0·28	56·7	+0·15	−0·2·
	A.G.Z. Leip.	25·343	86·5	3	0	34	57·14	86·5	3	0·00	57·1	+0·11	+0·2
	New Obs.	25·232	89·9			23	56·97	89·9			57·0	0·00	0·0
	* Ann Arbor, *Astr. Not.* No. 4.												
b													
0ˢ·	B. Z. 29	0 42 31·400	1821·8	1	— ·048	31·35	+ 9 39 15·83	1821·8	1	+0·50	16·3	+0·32	−0·7
−0″·088	Rü. N.F. 316	30·831	48	2	+ 72	30·90	15·70	48	2	−0·65	15·0·	−0·13	+0·3·
	A.G.Z. Leip.	31·128	86·8	2	0	31·13	11·08	86·8	2	0·00	11·1	+0·09	−0·2
	New Obs.	31·036	89·8			04	11·02	89·8			11·0	0·00	0·0

Digitized by Google

Star's Designation and Assumed Proper Motion	Authority	R.A., 1889	Epoch	No. of observations	Reduction to A.G.C.	Reduced R.A. for Epoch	Dec., 1889	Epoch	No. of observations	Reduction to Mean Syst.	Reduced Dec. for Epoch	Outstanding Error	
c		h m s			s	s	° ′ ″			″	″	s	″
+0s·0013	B. Z. 42.....	0 44 24·229	1822·0	1	— ·048	24·18	+11 13 42·41	1822·0	1	+0·49	42·9	—0·07	+3·8
—0″·055	Str. P.M. 62 ...	24·245	32·4	4	— 38	21	39·50	32·4	4	—0·62	38·9	—0·05	+0·4
	Lam. 453	24·598	43·9	1	— 60:	54	37·44	43·9	1	—1·2:	36·2	+0·26	—1·6
	A.G.Z. Leip. ...	24·348	71·4	2	0	35	35·43	71·4	2	0·00	35·4	+0·03	—0·9
	New Obs.	24·335	89·8			33·	35·33	89·8			35·3	0·00	0·0
d													
	Lal. H.C.	0 44 46·375	1793·9	1	+ ·165	46·54	+ 9 48 28·46	1793·9	1	—2·75	25·7	—0·15·	+1·0
	B. Z. 29	46·602	1821·8	1	— 48	55	26·53	1821·8	1	+0·50	27·0	—0·14	+2·3
	Rü. N.F. 335 ...	46·645	43	1	+ 72	72	25·51	43	1	—0·65	24·9	+0·02	+0·1
	Par. 1051 (II) ..	46·534	56·7	1	+ 68:	60	24·97	58·9	2	+0·45:	25·4	—0·09	+0·7
	Schj. 289	46·579	62·0	1	+ 59	64	25·77	62·0	1	—0·61	25·2	—0·06	+0·4
	Safford*	46·834	70·0	2			25·62	70·0	2			+0·14	+0·9
	A.G.Z. Leip. ...	46·860	85·3	2	0	86	25·32	85·3	2	0·00	25·3	+0·16·	+0·6
	New Obs.	46·695	89·8			69·	24·75	89·8			24·7·	0·00	0·0
	* Chicago. A. N. 75, 380.												
e													
+0s·0048	D'Ag. 159	0 45 45·416	1784·8	1	+ ·140	45·56	+12 10 50·63	1784·8	1	—2·15	48·5	—0·11	—3·6·
0″·	Lal. H.C.	45·566	95·9	1	+ 172	74	54·53	95·9	1	—3·03	51·5	+0·02	—0·6
	Pi. oh. 208	45·516	1800:	3	+ 172	69	55·73	1800:	3	—3·03	52·7	—0·05	+0·6
	B. Z. 42, 124 ...	45·803	22·4	2	— 48	75·	55·99	22·4	2	+0·49	56·5	—0·09	+4·3·
	Tayl. 256	46·037	35:	3	— 68	97	54·26	35:	3	—0·58	53·7	+0·06·	+1·5·
	Par. 1077 (I) ...	45·741	39·8	3	+ 68:	81						—0·12	
	Lam. 472	46·114	42·0	2	— 60:	46·05	53·62	42·0	2	—1·2:	52·4	+0·12	+0·3
	Rü. N.F. 348 ...	45·766	49	1	+ 72	45·84	52·55	49	1	—0·65	51·9	—0·13	—0·2
	Par. 1077 (II) ..	45·928	58·8	1	+ 68:	46·00	53·07	58·8	2	+0·45:	53·5	—0·02	+1·4
	Schj. 295	45·964	62·0	1	+ 59	02	53·98	62·0	1	—0·61	53·4	—0·01	+1·2
	A.G.Z. Leip. ...	46·156	71·4	2	0	16	51·60	71·4	2	0·00	51·6	+0·08	—0·5
	Glasg. 223	46·095	71·3	2	+ 37	13	52·24	76·4	5	—0·27	52·0	+0·05	—0·2
	Par. 1077 (III).	46·176	79·9	1	+ 68:	24	50·35	79·9	1	+0·45:	50·8	+0·12·	—1·3
	New Obs.	46·167	89·8			17	52·13	89·8			52·1	0·00	0·0
e′													
+0s·0032	Lal. H.C.	0 46 19·468	1793·9	1	+ ·166	19·63	+ 9 59 58·33	1793·9	1	—2·78	55·5·	—0·41·	—0·9
—0″·042	Str. P.M. 66 ...	20·293	1825·8	4	— 38	20·25·	56·07	1825·8	4	—0·66	55·4	+0·09·	+0·3
	Rü. N.F. 354 ...	20·107	50	2	+ 72	18	54·80	50	2	—0·65	54·1·	—0·06	0·0
	Par. 1090 (II) ..	20·197	57·9	2	+ 68:	26·	52·81	57·8	1	+0·45:	53·3	0·00	—0·4·
	Quet. 343	20·169	64·9	2	+ 51	22	53·87	64·9	2	—0·21	53·7	—0·06·	+0·2

Digitized by Google

Star's Designation and Assumed Proper Motion	Authority	R.A., 1889	Epoch	No. of observations	Reduction to A.G.C.	Reduced R.A. for Epoch	Dec., 1889	Epoch	No. of observations	Reduction to Mean Syst.	Reduced Dec. for Epoch	Outstanding Error	
		h m s			s	s	° ′ ″			″	″	s	″
e′—*cont.*	Yarn. 449.....	0 46 20·254	1865·7	3	+ ·022	20·28	+ 9 59 54·81	1866·8	2	−0·59	54·2	−0·01	+0·9
	A.G.Z. Leip. ...	20·338	71·8	2	0	34	53·06	71·8	2	0·00	53·1	+0·03	−0·1
	Par. 1090 (III)..	20·279	72·9	1	+ 68:	35	54·11	72·9	1	+0·45:	54·6	+0·04	+1·5
	A.G.Z. Leip. ...	20·490	85·3	2	0	49	51·55	85·3	2	0·00	51·5	+0·14	−1·0
	New Obs.	20·365	89·8			36·	52·39	89·8			52·4	0·00	0·0
f													
−0ˢ·0008	Lal. H.C.	0 46 39·939	1795·9	1	+ ·174	40·11	+13 2 49·20	1795·9	1	−3·11	46·1	−0·01	−0·7
−0″·028	B. Z. 42. 124	40·366	1822·4	2	− 48	32	47·23	1822·4	2	+0·49	47·7	+0·21	+1·7
	Rü. 211	40·031	40:	3	+ 13	04	46·74	40:	3	+0·75	47·5	−0·05	+2·1
	Lam. 479	40·081	42·0	2	− 60:	02	46·49	42·0	2	−1·2:	45·3	−0·07	−0·1
	Rü. N.F. 359 ...	39·963	45	1	+ 72	03·	44·36	45	1	−0·65	43·7	−0·05	−1·5
	Par. 1099 (II) ..	40·152	59·9	1	+ 68:	22	44·14	59·3	2	+0·45:	44·6	+0·14	−0·2
	A.G.Z. Leip. ...	40·014	70·8	3	0	01	42·81	70·8	3	0·00	42·8	−0·05	−1·6
	Par. 1099 (III)..	40·082	79·9	1	+ 68:	15	43·94	79·9	1	+0·45:	44·4	+0·09	+0·3
	New Obs.	40·053	89·8			05	43·82	89·8			43·8	0·00	0·0
g													
−0ˢ·0014	Lal. H.C.	0 47 0·223	1794·9	1	+ ·164	0·39	+ 9 12 12·06	1794·9	1	−2·63	9·4	−0·40	+0·1
−0″·045	B. Z. 29, 111 ...	0·915	1822·3	2	− 48	87	7·80	1822·3	2	+0·51	8·3	+0·11	+0·2
	Sant. 47	0·781	40:	3	+ 12	79	4·49	40:	3	+1·58	6·1	+0·06	−1·2
	Rü. N.F. 367 ...	0·737	50	1	+ 72	81	7·23	50	1	−0·65	6·6	+0·09	−0·2
	Par. 1108 (II) ..	0·611	56·8	1	+ 68:	68	7·06	56·8	1	+0·45:	7·5	−0·03	+1·0
	Berlin*	0·808	71:	2	0	81	4·50	71:	2	0	4·5	+0·12	−1·4
	Glasg. 227	0·798	72·4	2	+ 45	84	4·32	75·8	4	−0·27	4·0	+0·16	−1·6
	Par. 1108 (III)..	0·793	74·9	2	+ 68:	86	5·95	74·8	1	+0·45:	6·4	+0·18	+0·7
	A. G. Z. Leip. ...	0·905	85·3	2	0	90·	4·90	85·3	2	0·00	4·9	+0·24	−0·3
	New Obs.	0·659	89·8			66	5·02	89·8			5·0	0·00	0·0
	**Astr. Nach.* 81, 67.												
h													
−0ˢ·0021	Lal. H.C.	0 48 2·313	1793·9	1	+ ·167	2·48	+10 31 18·45	1793·9	1	−2·87	15·6	−0·65	−2·5
−0″·062	B. Z. 29	3·174	1821·8	1	− 48	3·13	15·91	1821·8	1	+0·49	16·4	+0·06	+0·1
	Rü. 216	2·719	40:	2	+ 15	2·73	17·27	40:	2	+0·70	18·0	−0·30	+2·8
	Par. 1134 (II) ..	3·028	58·8	1	+ 68:	3·10	15·14	58·8	1	+0·45:	15·6	+0·10	+1·6
	Yarn. 471	2·918	65·3	4	+ 23	2·94	12·97	65·8	2	−0·59	12·4	−0·04	−1·2
	A.G.Z. Leip. ...	3·019	71·8	2	0	3·02	12·94	71·8	2	0·00	12·9	+0·05	−0·3
	New Obs.	2·927	89·8			2·93	12·11	89·9			12·1	0·00	0·0

Digitized by Google

Star's Designation and Assumed Proper Motion	Authority	R.A., 1889	Epoch	No. of observations	Reduction A.G.C.	Reduced R.A. for Epoch	Dec., 1889	Epoch	No. of observations	Reduction to Mean Syst.	Reduced Dec. for Epoch	Outstanding Error	
i		h m s			s	s	° ′ ″			″	″	s	″
+0s·0015	Rü. 222	0 49 11·734	1840:	4	+ ·014	11·75	+12 14 47·96	1840:	4	+0·74	48·7	−0·14	+1·5
−0″·055	Lam. 493	12·064	41·9	2	— 60:	12·00	47·57	41·9	2	−1·2:	46·4	+0·11	−0·7
	Bonn VI.	12·081	61·8	1	— 38	04	46·34	61·8	1	−0·70	45·6	+0·12	−0·4
	Schj. 315	11·762	62·0	1	+ 59	11·82	45·52	62·0	1	−0·61	44·9	−0·10	−1·1
	A.G.Z. Leip. ...	12·012	70·9	3	0	12·01	44·66	70·9	3	0·00	44·7	+0·08	−0·8
	New Obs.	11·963	89·8			11·96	44·46	89·8			44·5	0·00	0·0
k													
	Mayer 31	0 50 20·365	1756·7	1	0·000	20·36·	+13 21 0·57	1756·7	1	0·00	0·6	+0·67	−1·2
	Lal. H.C.	19·675	94·8	2	+ 175	19·85	4·19	94·8	2	−3·16	1·0	+0·15	−0·7
	Pi. 0h. 231	19·500	1800:	7	+ 175	67·	4·19	1800:	9	−3·16	1·0	−0·02	−0·7
	B. Z. 42, 124 ...	19·674	22·4	2	— 48	63	2·68	22·4	2	+0·49	3·2	−0·07	+1·4
	Wrott. 55	19·728	33·4	10	+ 42	77						+0·07	
	Tayl. 281	19·764	35:	5	— 66	70	2·44	35:	5	−0·54	1·9	0·00	+0·1
	Par. 1186 (I) ...	19·856	40·8	1	+ 68:	92	2·48	46·8	1	+0·45:	2·9	+0·23	+1·2
	Rü. N.F. 406 ...	19·813	44	1	+ 72	88·	3·43	44	1	−0·65	2·8	+0·19	+1·0
	Rob. 199	19·726	44·4	5	+ 7	73	4·41	54·0	4	−0·42	4·0	+0·04	+2·2
	Wrott. II. 45 ...	19·693	51·3	5	+ 34	73						+0·03	
	Par. 1186 (II) ...	19·697	58·3	2	+ 68:	76·	2·22	57·7	2	+0·45:	2·7	+0·07	+0·9
	A.G.Z. Leip. ...	19·775	71·9	2	0	77·	1·46	71·9	2	0·00	1·5	+0·08	−0·3
	Glasg. 239	19·750	73·9	3	+ 31	78	1·42	74·8	4	−0·26	1·2	+0·08·	−0·6
	New Obs.	19·696	89·8			70	1·76	89·8			1·8	0·00	0·0
l													
	B. Z. 124	0 50 40·522	1822·9	1	— ·048	40·47	+12 6 46·30	1822·9	1	+0·49	46·8	+0·11	+2·9
	Lam. 505	40·484	42·9	2	— 60:	42	45·43	42·9	2	−1·2:	44·2	+0·06	+0·3·
	Par. 1196 (II) ...	40·410	61·8	3	+ 68:	48	46·05	61·8	2	+0·45:	46·5	+0·12	+2·6
	A.G.Z. Leip. ...	40·436	71·4	2	0	44	42·91	71·4	2	0·00	42·9	+0·08	−1·0
	New Obs.	40·360	89·8			36	43·88	89·8			43·9	0·00	0·0
m	Not observed before 1889.												
n													
	B. Z. 29, 111 ...	0 50 59·218	1822·3	2	— ·048	59·17	+ 9 24 51·27	1822·3	2	+0·51	51·8	−0·01	−2·0
	Schj. 329	59·247	61·9	1	+ 59	31	55·23	61·9	1	−0·61	54·6	+0·12	+0·9
	A.G.Z. Leip. ...	59·435	85·3	2	0	43·	54·27	85·3	2	0·00	54·3	+0·25	+0·5
	New Obs.	59·182	89·9			18	53·76	89·8			53·8	0·00	0·0
o													
	Lam. 515	0 51 32·780	1842·9	2	— ·060:	32·72	+11 49 44·18	1842·9	2	−1·2:	43·0	−0·18	−2·9
	A.G.Z. Leip. ...	32·969	71·4	2	0	97	45·58	71·4	2	0·00	45·6	+0·07	−0·3
	Bau. 293	32·960	85·9	1	0	96	46·48	85·9	1	0·00	46·5	+0·06	+0·6
	New Obs.	32·901	89·8			90	45·88	89·8			45·9	0·00	0·0

Digitized by Google

Star's Designation and Assumed Proper Motion	Authority	R.A., 1889	Epoch	No. of observations	Reduction to A.G.C.	Reduced R.A. for Epoch	Dec., 1889	Epoch	No. of observations	Reduction to Mean Syst.	Reduced Dec. for Epoch	Outstanding Error.	
p		h m s			s	s	° ′ ″			″	″	s	″
	Mayer 33	0 52 5·659	1756·7	2	0·000	5·66	+13 5 44·02	1756·7	2	0·00	44·0	+0·65	−0·2
	Lal. H.C.	4·849	95·9	1	+ 175	·02	47·45	95·9	1	−3·12	44·3	+0·01	+0·1
	Pi. 0h.243	4·929	1800:	9	+ 175	·10	46·67	1800:	9	−3·12	43·5	+0·09	−0·6
	B. Z. 42, 113	5·368	22·4	2	− 48	·32	44·06	22·4	2	+0·49	44·5	+0·31	+0·4
	Wrott. 58	4·957	33·4	10	+ 42	·00						−0·01	
	Tayl. 293	5·188	35:	5	− 67	·12	46·82	35:	5	−0·55	46·3	+0·11	+2·1
	Pulk. 124	5·080	42·4	4	+ 53	·13	44·80	42·4	4	+0·07	44·9	+0·12	+0·7
	Par. 1235 (I)	4·980	41·1	6	+ 68:	·05	45·73	46·8	1	+0·45:	46·2	+0·04	+2·0
	Rü. N.F. 428	4·982	45	2	+ 72	·05	44·60	45	2	−0·65	43·9	+0·04	−0·2
	Rob. 206	5·125	40·6	3	+ 7	·13	46·17	52·6	4	−0·42	45·7	+0·12	+1·6
	Par. 1235 (II)	4·986	58·7	3	+ 68:	·05	44·84	58·7	4	+0·45:	45·3	+0·04	+1·1
	Yarn. 506	5·116	55·1	7	+ 24	·14	44·84	69·4	2	−0·49	44·3	+0·13	+0·2
	Kbg. Obs. 37	5·117	61·8	1			45·70	61·8	1			+0·10	+1·5
	Schj. 333–4	4·999	61·9	2	+ 59	·06	46·21	61·9	2	−0·61	45·6	+0·05	+1·4
	A.G.Z. Leip.	5·036	71·3	3	0	·04	43·47	71·3	3	0·00	43·5	+0·02	−0·7
	Arm. II. 140	4·955	79·6	3	+ 38	4·99	44·83	79·6	3	−0·63	44·2	−0·02	0·0
	Par. 1235 (III)	4·915	80·4	4	+ 68:	·98	44·93	80·4	4	+0·45:	45·4	−0·03	+1·2
	Grw. 10-yr. 149	5·058	80·5	6	+ 20	5·08	43·76	80·4	8	+0·44	44·2	+0·07	0·0
	New Obs.	5·012	89·9			01	44·19	89·9			44·2	0·00	0·0
q													
	B. Z. 113	0 53 54·243	1822·8	1	− ·048	54·19	+14 0 35·87	1822·8	1	+0·49	36·4		
	New Obs.	53·734	89·8			53·73	37·95	89·8			37·9		
r													
0s·	Pi. 0h.255	0 55 25·465	1800:	4	+ ·167	25·63	+10 34 59·57	1800:	4	−2·87	56·7	+0·04	+0·1
+0″·026	Par. 1315 (I)	25·484	39·9	2	+ 68:	55						−0·03	
	A.G.Z. Leip.	25·637	72·9	2	0	64	57·89	72·9	2	0·00	57·9	+0·05	−0·6
	New Obs.	25·587	89·8			59	58·92	89·8			58·9	0·00	0·0
s													
−0s·0007	Lal. H.C.	0 55 32·399	1793·9	1	+ ·170	32·57	+11 18 51·50	1793·9	1	−2·95	48·5	−0·36	+0·1
+0″·025	Pi. 0h.257	32·739	1800:	6	+ 170	91	51·50	1800:	6	−2·95	48·5	−0·01	0·0
	B. Z. 29	33·231	21·8	1	− 48	33·18	48·76	21·8	1	+0·49	49·2	+0·27	+0·1
	Tayl. 308	33·015	35:	2	− 69	32·95	49·96	35:	3	−0·62	49·3	+0·05	−0·1
	Sant. 56	32·891	40:	3	+ 12	90	48·25	40:	3	+1·68	49·9	+0·01	+0·4
	Lam. 538	32·456	43·9	1	− 60	40	45·55	43·9	1	−1·2:	44·3	−0·50	−5·3
	Par. 1321 (II)	32·748	57·7	1	+ 68	82	51·54	57·7	1	+0·45:	52·0	−0·07	+2·0
	Quet. 401	32·800	70·2	4	+ 55	85	50·04	67·8	2	−0·20	49·8	−0·02	−0·4

Digitized by Google

Star's Designation and Assumed Proper Motion	Authority	R.A., 1889	Epoch	No. of observations	Reduction to A.G.C.	Reduced R.A. for Epoch	Dec., 1889	Epoch	No. of observations	Reduction to Mean Syst.	Reduced Dec. for Epoch	Outstanding Error	
		h m s			s	s	° ′ ″			″	″	s	″
s—*cont.*	A.G.Z. Leip. ..	0 55 32·968	1871·4	2	·000	32·97	+11 18 50·15	1871·4	2	0·00	50·1	+0·09	—0·2
	Par. 1321 (III) .	32·904	81·9	2	+ 68:	97	50·43	81·9	2	+0·45:	50·9	+0·10	+0·3
	New Obs.	32·861	89·8			86	50·81	89·8			50·8	0·00	0·0
t													
	B. Z. 113	0 56 43·848	1822·8	1	— ·048	43·80	+13 39 18·52	1822·8	1	+0·49	19·0		
	New Obs.	43·503	89·8			50	17·62	89·8			17·6		
u													
—0s·0018	Lal. H.C.	0 57 9·389	1795·9	1	+ ·181	9·57	+15 32 41·05	1795·9	1	—3·15	37·9	—0·24	—0·2
—0″·119	B. Z. 394	9·800	1828·0	1	+ 2	80	32·74	1828·0	1	+0·49	33·2	+0·04	—0·9
	Par. 1350 (II) ...	9·647	62·0	1	+ 68:	71	30·15	59·5	3	+0·45:	30·6	+0·02	—2·9
	A.G.Z. Berl. ...	9·718	70·9	3	+ 14	73	29·37	70·9	3	—0·3	29·1	+0·05	—0·1
	Par. 1350 (III) .	9·648	81·8	1	+ 68:	72	28·27	81·8	1	+0·45:	28·7	+0·05	+0·9
	New Obs.	9·646	89·8			65	26·89	89·9			26·9	0·00	0·0
v													
—0s·0032	Lal. H.C.	0 57 16·326	1795·9	1	+ ·173	16·50	+12 27 19·19	1795·9	1	—3·08	16·1	—0·15	+1·7
—0″·046	B. Z. 124	16·675	1822·9	1	— 48	63	13·72	1822·9	1	+0·49	14·2	+0·07	+1·0
	Lam. 548	16·615	41·9	1	— 60:	55	14·42	41·9	1	—1·2:	13·2	+0·05	+1·8
	Rü. N.F. 485 ...	16·525	48	2	+ 72	60	10·91	48	2	—0·65	10·3	+0·11	—1·8
	Par. 1353 (II) ...	16·340	59·5	3	+ 68:	41	11·82	59·5	3	+0·45:	12·3	—0·04	+0·7
	A.G.Z. Leip. ...	16·416	70·9	3	0	42	10·18	70·9	3	0·00	10·2	0·00	—0·8
	New Obs.	16·353	89·9			35	10·12	89·9			10·1	0·00	0·0
w													
—0s·0032	B. Z. 124	0 58 0·972	1822·9	1	— ·048	0·92	+13 20 28·09	1822·9	1	+0·49	28·6	+0·19	+0·6
—0″·019	Lam. 554	0·642	42·0	1	— 60:	58	31·97	42·0	1	—1·2:	30·8	—0·10	+3·1
	A.G.Z. Leip. ...	0·575	70·9	3	0	57	26·15	70·9	3	0·0	26·1	—0·02	—0·9
	New Obs.	0·531	89·8			53	26·72	89·8			26·7	0·00	0·0
x													
—0s·0009	Bradl. 119	0 59 13·914	1754·6	3	0·000	13·91	+14 20 49·78	1754·3	3	0·00	49·8	+0·03	+1·1
+0″·055	Lal. H.C.	13·854	93·8	1	+ 178	14·03	51·54	93·8	1	—3·19	48·3	+0·19	—2·5
	Pi. 0h. 274	13·524	1800:	5	+ 178	13·70	53·94	1800:	10	—3·19	50·7	—0·14	—0·5
	Wrott. 65	13·750	33·4	10	+ 42	79						—0·02	
	Tayl. 328	13·976	35:	6	— 65	91	54·26	35:	5	—0·51	53·7	+0·10	+0·6
	Par. 1386 (I)	13·718	41·7	6	+ 68:	79	53·52	39·9	1	+0·45:	54·0	—0·01	+0·6
	Rob. 225	13·568	30·8	1	+ 7	57	54·47	53·9	2	—0·33	54·1	−0·24	0·0
	Pulk. 138.....	13·872	46·1	4	+ 53	92	53·17	46·1	4	+0·07	53·2	+0·13	—0·5
	Wrott. II. 53 ...	13·749	50·9	5	+ 34	78						—0·01	

Digitized by Google

Star's Designation and Assumed Proper Motion	Authority	R.A., 1889	Epoch	No. of observations	Reduction to A.G.C.	Reduced R.A. for Epoch	Dec., 1889	Epoch	No. of observations	Reduction to Mean Syst.	Reduced Dec. for Epoch	Outstanding Error	
		h m s			s	s	° ′ ″			″	″	s	″
x—*cont.*	Par. 1386 (II) ...	0 59 13·802	1861·9	4	+ ·068:	13·87	+14 20					+0·09	
	Grw. II. 7-yr. 127	13·750	65·6	3	+ 55	80·	54·87	1865·6	3	—0·08	54·8	+0·02·	0·0
	„ 9-yr. 98 ...	13·763	72·3	5	+ 29	79	55·56	72·3	5	—0·84	54·7	+0·02	—0·4·
	A.G.Z. Leip. ...	13·761	72·9	2	0	76	53·84	72·9	2	0·00	53·8	—0·01	—1·4
	Par. 1386 (III) ..	13·816	79·9	2	+ 68:	88	56·44	79·9	2	+0·45:	56·9	+0·12	+1·3
	Grw. 10-yr. 170..	13·733	80·2	3	+ 19	75	55·37	80·2	3	+0·44	55·8	—0·01·	+0·2
	New Obs.	13·758	89·8			76	56·13	89·8			56·1	0·00	0·0
y*	Not previously observed.												
y													
—0ˢ·0016	Lal. H.C.	1 0 4·230	1793·8	1	+ ·179	4·41	+14 47 31·44	1793·8	1	—3·19	28·2·	—0·09	—2·1
—0″·072	B. Z. 113	4·427	1822·8	1	— 48	38	26·41	1822·8	1	+0·49	26·9	—0·08	—1·4
	Par. 1404 (II) ...	4·341	57·9	1	+ 68:	41	26·89	57·8	2	+0·45:	27·3	+0·01	+1·6
	A.G Z. Leip.	4·375	72·9	3	0	37·	24·11	72·9	3	0·00	24·1	0·00	—0·5·
	Par. 1404 (III) ..	4·353	79·9	3	+ 68:	42	24·97	79·9	3	+0·45:	25·4	+0·04	+0·5
	New Obs.	4·349	89·8			35	23·45	89·8			23·4·	0·00	0·0
z													
+0ˢ·0004	Lal. H.C.	1 0 28·999	1795·9	1	+ ·182	29·18	+15 43 16·74	1795·9	1	—3·16	13·6	—0·36·	—2·1
—0″·060	Bonn VI.	29·692	1856·8	1	— 38	65	12·72	1856·8	1	—0·46	12·3	+0·08	+0·4
	Par. 1414 (II) ..	29·572	58·7	2	+ 68:	64						+0·07	
	A.G.Z. Berl.	29·666	70·0	2	+ 14	68	10·24	70·0	2	+0·2	10·4	+0·10·	—0·6
	Par. 1414 (III) ..	29·396	79·9	2	+ 68:	46	12·44	79·9	2	+0·45:	12·9	—0·11·	+2·4
	New Obs.	29·583	89·8			58	9·88	89·8			9·9	0·00	0·0
a													
—0ˢ·0042	Lal. H.C.	1 1 59·255	1793·8	1	+ ·181	59·44	+15 16 22·11	1793·8	1	—3·17	18·9	—0·49	+0·3·
—0″·037	B. Z. 394	60·115	1828·0	1	+ 2	60·12	16·36	1828·0	1	+0·49	16·8·	+0·34	—0·5
	Rü. N.F. 517 ...	59·709	45	1	+ 72	59·78	16·41	45	1	—0·65	15·8	+0·07	—0·9
	A.G.Z. Berl. ...	59·716	70·0	2	+ 14	73	16·95	70·0	2	—0·4	16·5·	+0·13	+0·8
	New Obs.	59·520	89·8			52	15·04	89·8			15·0	0·00	0·0
β													
	Lal. H.C.	1 2 1·474	1795·9	1	+ ·185	1·66	+16 49 14·11	1795·9	1	—3·05	11·1	—0·46	+0·4
	A.G.Z. Berl. ...	2·164	1871·0	3	+ 14	2·18	12·45	1871·0	3	—0·25	12·2	+0·06	+1·6
	New Obs.	2·120	89·9			12	10·64	89·9			10·6	0·00	0·0

Digitized by Google

Star's Designation and Assumed Proper Motion	Authority	R.A., 1889	Epoch	No. of observations	Reduction to A.G.C.	Reduced R.A. for Epoch	Dec., 1889	Epoch	No. of observations	Reduction to Mean Syst.	Reduced Dec. for Epoch.	Outstanding Error	
γ		h m s			s	s	° ′ ″			″	″	s	″
0s·0	Lal. H. C.	1 2 34·756	1795·9	1	+ ·186	34·94	+17 3 50·15	1795·9	1	−3·02	47·1	+0·09	+1·5
−0″·053	B. Z. 394	34·964	1828·0	1	+ 2	97	44·33	1828·0	1	+0·50	44·8	+0·11	+0·8
	A.G.Z. Berl. ...	35·001	70·4	2	+ 14	35·01·	41·57	70·4	2	−0·2	41·4	+0·16	−0·4
	New Obs.	34·855	89·9			34·85·	40·78	89·9			40·8	0·00	0·0
δ													
p.m. = 0	Lal. H.C.	1 4 18·151	1795·1	3	+ ·180	18·33	+15 4 62·39	1795·1	3	−3·18	59·2	+0·04	+0·5
	Pi. 0h. 311	17·701	1800:	6	+ 180	17·88	62·89	1800:	6	−3·18	59·7	−0·41	+1·0
	B.Z. 32, 113	18·331	22·4	2	− 48	18·28	61·42	22·4	2	+0·49	61·9	−0·01	+3·2
	Wrott. 72	18·230	33·4	10	+ 42	27						−0·02	
	Tayl. 370	18·354	35:	2	− 64	29	60·37	35:	5	−0·46	59·9	0·00	+1·2
	Rob. 251	18·131	31·0	1	+ 7	14	60·98	52·4	2	−0·29	60·7	−0·15	+2·0
	Rü. N.F. 528.....	18·364	49	2	+ 72	44	58·81	49	2	−0·65	58·2	+0·14	−0·5
	Wrott. II. 58	18·224	51·7	5	+ 34	26						−0·03	
	Yarn. 611	18·369	45·7	2	+ 27	40	58·85	69·9	2	−0·44	58·4	+0·10	−0·3
	Rdcl. II. 131	18·209	57·9	2	− 38	17	58·95	59·2	3	−0·43	58·5	−0·12	−0·1·
	Grn. 7-yr. 80	18·229	58·9	7	+ 44	27	59·37	58·8	8	−0·07	59·3	−0·02	+0·6
	Par. 1500 (II) ...	18·219	60·0	2	+ 68:	29	59·55	59·9	1	+0·45:	60·0	−0·00·	+1·3
	Glasg. 279	18·279	61·8	16	+ 26	30·	60·00	62·5	7	−0·26	59·7	+0·01	+1·1
	Quet. 470	18·227	64·7	5	+ 53	28	59·20	64·9	1	−0·18	59·0	−0·01	+0·3·
	A.G.Z. Leip. ...	18·284	70·0	2	0	28	57·35	70·0	2	0·00	57·3·	−0·01	−1·3
	,, Berl. ...	18·238	70·9	2	+ 14	25	60·30	70·9	2	−0·4	59·9	−0·04	+1·2
	Par. 1500 (III) ..	18·238	79·9	1	+ 68:	31	59·39	79·9	1	+0·45:	59·8	+0·01	+1·2
	Grw. 10-yr. 192 .	18·285	81·2	6	+ 19	30	58·92	81·2	6	+0·44	59·4	+0·01	+0·7
	New Obs.	18·292	89·8			29	58·67	89·8			58·7	0·00	0·0
ϵ													
	A.G.Z. Berl. ...	1 5 3·874	1870·9	2	+0·014	3·89	+17 48 5·83	1870·9	2	+0·5	6·3		
	New Obs.	3·794	89·8			79	6·11	89·8			6·1		
ζ													
	Lal. H.C.	1 5 10·119	1795·8	2	+ ·183	10·30	+16 11 16·76	1795·8	2	−3·13	13·6	+0·11	+1·6
	B. Z. 394	10·322	1828·0	1	+ 2	32	12·69	1828·0	1	+0·49	13·2	+0·13	+1·1
	A.G.Z. Berl. ...	10·296	71·0	2	+ 14	31	12·60	71·0	2	−0·5	12·1	+0·11	0·0
	New Obs.	10·193	89·8			19	12·06	89·8			12·1	0·00	0·0
η													
−0s·0065	Lal. H.C.	1 5 24·506	1793·8	1	+ ·177	24·68	+14 6 13·28	1793·8	1	−3·18	10·1	+0·03	+1·8
−0″·034	B. Z. 32	24·246	1821·9	1	− 48	20	6·70	1821·9	1	+0·49	7·2	−0·27	−0·2
	A.G.Z. Leip. ...	24·211	71·0	2	0	21	5·29	71·0	2	0·00	5·3	+0·06	−0·4
	New Obs.	24·026	89·9			03	5·05	89·9			5·0·	0·00	0·0

Digitized by Google

Star's Designation and Assumed Proper Motion	Authority	R.A., 1889	Epoch	No. of observations	Reduction to A.G.C.	Reduced R.A. for Epoch	Dec., 1889	Epoch	No. of observations	Reduction to Mean Syst.	Reduced Dec. for Epoch	Outstanding Error	
θ		h m s			s	s	° ′ ″			″		s	″
	Lal. H.C.	1 6 55·414	1795·8	2	+ ·183	55·60	+16 10 33·46	1795·8	2	−3·12	30·3	−0·15	+1·3
	B. Z. 394	55·764	1828·0	1	+ 2	77	28·94	1828·0	1	+0·49	29·4	+0·02	+0·4
	Par. 1546 (II) ...	55·571	59·8	2	+ 68:	64	28·03	60·8	1	+0·45:	28·5	−0·11	−0·6
	A.G.Z. Berl. ...	55·803	70·6	3	+ 15	82	29·60	70·6	3	−0·5	29·1	+0·07	+0·0·
	New Obs.	55·750	89·8			75	29·05	89·8			29·0·	0·00	0·0
ι													
−0s·0034	Bradl. 161	1 8 14·351	1754·3	3	0·000	14·35	+15 32 46·84	1754·3	3	0·00	46·8	+0·06	+1·0
−0″·008	Lal. H.C.	14·061	95·8	2	+ 181	24	49·08	95·8	2	−3·16	45·9	+0·09	+0·4
	Pi. 1 h. 19.....	13·720	1800:	3	+ 181	13·90	47·23	1800:	4	−3·16	44·1	−0·23	−1·4
	B. Z. 32, 394 ...	14·341	25·0	2	− 23	14·32	46·62	25·0	2	+0·49	47·1	+0·27	+1·9
	Wrott. 80	13·913	33·4	10	+ 42	13·95·						−0·07	
	Tayl. 397	14·107	35:	4	− 63	14·04	47·58	35:	5	−0·43	47·1·	+0·03	+2·0
	Rü. N.F. 549 ...	13·917	45	1	+ 72	13·99	46·02	45	1	−0·65	45·4	+0·04	+0·3
	Rob. 267	13·732	42·0	2	+ 7	74	45·43	51·9	3	−0·27	45·2	−0·22	+0·1
	Pulk. 172	14·033	50·3	4	+ 53	14·09	45·73	50·3	4	+0·05	45·8	+0·12	+0·7
	Par. 1571 (I) ...						47·79	50·9	1	+0·45:	48·2		+3·2
	Wrott. II. 62	13·957	51·7	5	+ 34	13·99						+0·03	
	Par. 1571 (II) ...	13·638	58·8	1	+ 68:	71	46·74	58·0	1	+0·45:	47·2	−0·23	+2·2
	Kbg. Obs. 37	13·982	61·8	1			46·53	61·8	1			+0·06	+1·6
	Glasg. 297.....	13·946	65·9	3	+ 26	97	45·32	65·9	3	−0·27	45·0·	+0·06	+0·1
	Grw. N. 7-yr. 165	13·800	67·8	3	+ 54	85	44·76	67·8	3	−0·07	44·7	−0·05	−0·2
	Quet. 497	13·828	69·2	4	+ 55	88	45·09	66·4	2	−0·27	44·8	−0·02	−0·1
	A.G.Z. Berl. ...	13·878	70·4	2	+ 15	89	45·83	70·4	2	−0·3	45·5	0·00	+0·6
	Grw. 10-yr. 201..	13·909	79·8	1	+ 20	93	44·29	79·8	1	+0·44	44·7	+0·06·	−0·1
	Par. 1571 (III) ..	13·828	79·8	1	+ 68:	90	46·05	79·8	1	+0·45:	46·5	+0·03	+1·7
	New Obs.	13·830	89·8			83	44·73	89·8			44·7	0·00	0·0
κ													
	A.G.Z. Berl. ...	1 10 15·793	1870·9	2	+0·015	15·81	+17 2 54·39	1870·9	2	−0·25	54·1		
	New Obs.	15·770	89·8			77	53·24	89·8			53·2		
λ													
	A.G.Z. Berl. ...	1 11 34·435	1870·6	3	+0·015	34·45	+15 46 6·79	1870·6	3	+0·2	7·0		
	New Obs.	34·334	89·8			33	7·45	89·8			7·4·		
μ													
−0s·0031	Lal. H.C.	1 12 26·035	1793·8	1	+ ·188	26·22	+17 59 31·70	1793·8	1	−2·83	28·9	−0·11	−2·2
+0″·005	B. Z. 332	26·300	1826·0	1	+ 2	30	32·08	1826·0	1	+0·50	32·6	+0·07	+1·4
	Par. 1641 (II) ...	26·062	58·8	1	+ 68:	13	31·78	58·8	2	+0·45:	32·2	0·00	+0·8·
	A.G.Z. Berl. ...	26·100	70·9	2	+ 15	11·	31·18	70·9	2	+0·2	31·4	+0·02	−0·1
	New Obs.	26·032	89·8			03	31·53	89·8			31·5	0·00	0·0

Digitized by Google

Star's Designation and Assumed Proper Motion	Authority	R.A., 1889	Epoch	No. of observations	Reduction to A.G.C.	Reduced R.A. for Epoch	Dec., 1889	Epoch	No. of observations	Reduction to Mean Syst.	Reduced Dec. for Epoch	Outstanding Error	
C		h m s			s	s	° ′ ″			″	″	″	″
0ˢ·	Lal. H.C.	1 17 1·525	1796·0	1	+ ·168	1·69	+10 47 21·99	1796·0	1	−2·90	19·1	−0·48	+1·1
−0″·050	B. Z. 29	2·559	1821·8	1	− 48	2·51	16·08	1821·8	1	+0·49	16·6	+0·34	−0·1
	Sant. 77	1·991	40:	3	+ 12	00	13·58	40:	3	+1·67	15·2	−0·17	−0·5
	Par. 1725 (II) ...	2·069	58·8	1	+ 68:	14						−0·03	
	Arm. II. 190 ...						14·49	64·8	1	−0·47	14·0		−0·5
	A.G.Z. Leip. ...	2·205	69·0	2	0	20	14·95	69·0	2	0·00	14·9	+0·03	+0·6
	Par. 1725 (III) ..	2·260	75·9	1	+ 68:	33	14·29	72·9	2	+0·45:	14·7	+0·16	+0·6
	Glasg. 320.....	2·153	70·9	3	+ 38	19	11·61	78·1	4	−0·26	11·3	+0·02	−2·5
	New Obs.	2·172	89·8			17	13·28	89·8			13·3	0·00	0·0
D													
+0ˢ·0051	Mayer 55	1 22 25·459	1756·7	1	0·000	25·46	+16 30 18·46	1756·7	1	0·00	18·5	+0·18	−1·0
−0″·023	Lal. H.C.	24·696	95·7	1	+ 184	24·88	20·81	95·7	1	−3·11	17·7	−0·60	−0·9
	Pi. 1ʰ. 84.....	25·272	1800:	5	+ 184	25·46	21·51	1800:	5	−3·11	18·4	−0·04	−0·1
	B. Z. 394	25·704	28·0	1	+ 2	71	17·34	28·0	1	+0·49	17·8	+0·06	0·0
	Wrott. 96	25·493	33·4	6	+ 42	53						−0·13	
	Tayl. 471	25·854	35:	5	− 62	79	18·26	35:	5	−0·40	17·9	+0·11	+0·2
	Par. 1814 (I) ...	25·638	39·9	2	+ 68	71	18·31	39·9	1	+0·45:	18·8	0·00	+1·2
	Rü. N.F. 674 ...	25·741	47	1	+ 72	81	16·78	47	1	−0·65	16·1	+0·07	−1·3
	Rob. 319	25·557	43·0	2	+ 7	56	17·42	52·3	3	−0·23	17·2	−0·15	−0·1
	Wrott. II. 68 ...	25·661	51·4	5	+ 34	69						−0·07	
	Par. 1814 (II) ...	25·684	58·4	2	+ 68:	75	18·23	58·3	2	+0·45:	18·7	−0·05	+1·5
	Yarn. 717	25·854	61·2	3	+ 30	88	17·06	67·9	2	−0·44	16·6	+0·07	−0·3
	Par. 1814 (III) ..	25·673	69·9	1	+ 68:	74	18·05	69·9	1	+0·45:	18·5	−0·12	+1·6
	A.G.Z. Berl. ...	25·873	70·0	2	+ 17	89	18·35	70·0	2	−0·6	17·7	+0·03	+0·9
	Quet. 580	25·795	69·0	2	+ 60	85	17·52	71·9	2	−0·16	17·4	0·00	+0·5
	New Obs.	25·958	89·8			96	16·41	89·8			16·4	0·00	0·0

The systematic reductions to the places A.G.Z. Berlin made use of in this table are the corrections discussed in the Introduction to the author's part of the Berlin Zone Catalogue. Previous to this discussion, which was made between the printing of the *Iris* division and of the *Sappho* division of the present work, the A.G.Z. places were supposed to agree with the system of the A.G.C., and are used without reduction therefore in the corresponding table for the *Iris* stars.

Digitized by Google

SUMMARY OF RESULTS FOR

Star.	Mag.	No. of Observations	From Observatories	R.A., 1889	Epoch	Weight Σp	Proper Motion in R.A., and Weight	Precession in R.A. 1800	1850	1900
				h m s			s	s	s	s
A	7·3	248, 251	13	0 31 32·042	89·82	51·9	0	3·0994	3·1039	3·1086
B	7·3	250, 254	13	37 4·285	·82	52·9	— 0·0048 168	3·1234	3·1296	3·1359
a	7·7	67	15	42 25·233	·77	24·5	0	3·1022	3·1064	3·1108
b	9·0	47	15[1]	42 31·032	·83	19·5	0	3·1063	3·1108	3·1155
c	8·6	54. 53	13	44 24·336	·89	19·6	+ 0·0013 137	3·1146	3·1196	3·1247
d	8·5	66	14	44 46·695	·86	23·0	0	3·1091	3·1137	3·1184
e	7·0	85, 87	14	45 46·170	·85	27·7	+ 0·0048 360	3·1202	3·1255	3·1310
e′	(8·3)*	40	13	46 20·364	·81	14·4	+ 0·0032 205	3·1114	3·1161	3·1209
f	7·3	37	13[2]	46 40·053	·84	15·4	— 0·0008 162	3·1251	3·1307	3·1364
g	8·3	39, 38	14	47 0·653	·85	15·6	— 0·0014 133	3·1085	3·1130	3·1176
h	8·4	71	15	48 2·926	·87	24·5	— 0·0021 117	3·1154	3·1203	3·1253
i	8·2	43	14	49 11·963	·85	17·8	+ 0·0015 88	3·1246	3·1300	3·1355
k	6·5	49, 50	13	50 19·698	·87	18·8	0	3·1313	3·1370	3·1429
l	8·8	33	12	50 40·362	·90	13·4	0	3·1257	3·1311	3·1367
m	8·7	31	11	50 52·287	·86	12·7		3·1361	3·1421	3·1482
n	8·7	46, 43	12[3]	50 59·181	·85	17·7	0	3·1130	3·1177	3·1225
o	8·2	51	12	51 32·901	·87	18·3	0	3·1254	3·1307	3·1362
p	6·0	85, 87	13	52 5·018	·87	26·4	0	3·1323	3·1380	3·1439
q	8·5	43, 44	15	53 53·733	·82	17·4	0	3·1394	3·1454	3·1516
r	8·2	44	15	55 25·586	·88	18·8	0	3·1232	3·1283	3·1335
s	(8·0)†	61, 60	13	55 32·859	·86	22·2	— 0·0007 244	3·1272	3·1325	3·1379
t	8·5	56	12	56 43·503	·81	20·6	0	3·1413	3·1473	3·1534
u	8·5	38	13	57 9·649	·90	16·9	— 0·0018 77	3·1525	3·1591	3·1658
v	7·8	54	13	57 16·354	·94	18·7	— 0·0032 119	3·1353	3·1410	3·1468
w	8·7	31	12	58 0·526	·80	13·7	— 0·0032 40	3·1412	3·1472	3·1532
x	6·0	89, 91	15	59 13·757	·85	26·9	— 0·0009 530	3·1487	3·1549	3·1613
y*	9·0	56	13	59 56·988	·87	19·0		3·1499	3·1562	3·1626
y	7·7	21	5	1 0 4·349	·85	10·4	— 0·0016 78	3·1525	3·1589	3·1654
z	8·5	33	12	0 29·584	·86	14·7	+ 0·0004 67	3·1586	3·1653	3·1722
α	8·0	70. 69	15	1 59·521	·87	23·9	— 0·0042 83	3·1582	3·1648	3·1715
β	8·0	38, 39	12	2 2·122	·96	15·1	0	3·1679	3·1750	3·1822
γ	8·6	55. 54	14	2 34·854	·91	22·0	0	3·1703	3·1775	3·1848
δ	6·4	41, 42	13	4 18·297	·81	16·0	0	3·1604	3·1670	3·1738
ε	8·8	38, 39	13	5 3·799	·90	16·1	0	3·1794	3·1868	3·1944
ζ	8·5	64	13	5 10·192	·85	23·5	0	3·1689	3·1759	3·1830
η	8·2	53	11	5 24·026	·87	19·8	— 0·0065 76	3·1557	3·1620	3·1685
θ	8·5	42. 43	14	6 55·751	·83	18·0	0	3·1716	3·1786	3·1857
ι	6·0	63, 62	14	8 13·835	·85	24·9	— 0·0034 533	3·1694	3·1762	3·1831
κ	8·3	70	14	10 15·770	·86	23·3	0	3·1831	3·1904	3·1979
λ	8·8	63	15	11 34·333	·87	24·6	0	3·1760	3·1830	3·1901
μ	8·0	69	15	12 26·037	·80	24·0	— 0·0031 83	3·1937	3·2014	3·2092
C	7·0	226	13	17 21·176	·79	49·7	0	3·1464	3·1520	3·1578
D	7·2	228. 227	13	22 25·960	·80	50·2	+ 0·0051 399	3·1987	3·2061	3·2136

[1] For Dec., 14, Bordeaux (single obs.) excl. [2] For R.A., 12 (Vienna no R.A.). [3] For Dec., 11 (Cambr. Mass., 3 obs., excl.).

* Double 8ᵐ·5, 9ᵐ·3 1″·8 0°; position of optical centre of gravity.

† Double 8·2, 9·3 0·9 175; centre of gravity.

Digitized by Google

SAPPHO STARS (NORMALS N_3).

Dec., 1889	Epoch	Weight (Σp)	Proper Motion in Dec., and Weight		Precession in Dec.			$N_3 - N_2$		Star's Letter and Name
					1800	1850	1900			
° ′ ″			″		″	″	″	s	″	
+10 49 31·99	89·81	28·1	0		+19·922	19·890	19·856	+0·002	−0·03	A
16 3 22·72	·81	28·4	−0·093	159	19·860	19·822	19·782	+ 3	−0·01	B
8 36 56·93	·78	13·9	0		19·788	19·746	19·700	+ 1	−0·03	a
9 39 11·09	·83	11·2	−0·088	40	19·787	19·744	19·699	− 4	+0·07	b
11 13 35·30	·89	11·4	−0·055	137	19·759	19·714	19·667	+ 1	−0·03	c
9 48 24·70	·88	13·2	0		19·753	19·708	19·661	0	−0·05	d
12 10 52·12	·85	16·6	0		19·738	19·692	19·643	+ 3	−0·01	e
9 59 52·25	·85	8·4	−0·042	199	19·729	19·683	19·633	− 1	−0·14	e′
13 2 43·78	·85	9·2	−0·028	162	19·724	19·677	19·628	0	−0·04	f
9 12 4·92	·84	9·0	−0·045	133	19·718	19·671	19·621	− 6	−0·10	g
10 31 12·05	·91	13·8	−0·062	117	19·702	19·654	19·603	− 1	−0·06	h
12 14 44·50	·89	10·2	−0·055	88	19·683	19·633	19·581	0	+0·04	i
13 21 1·74	·87	11·7	0		19·664	19·613	19·560	+ 2	−0·02	k
12 6 43·89	·95	8·2	0		19·658	19·607	19·553	+ 2	+0·01	l
14 10 29·85	·87	7·5			19·654	19·603	19·549	− 1	−0·03	m
9 24 53·78	·84	9·9	0		19·652	19·601	19·547	− 1	+0·02	n
11 49 45·88	·89	11·3	0		19·642	19·590	19·536	0	0·00	o
13 5 44·24	·87	15·8	0		19·633	19·580	19·525	+ 6	+0·05	p
14 0 37·95	·87	9·9	0		19·600	19·545	19·488	− 1	0·00	q
10 34 58·87	·91	10·4	+0·026	168	19·570	19·515	19·457	− 1	−0·05	r
11 18 50·78	·89	12·6	+0·025	285	19·568	19·512	19·454	− 2	−0·03	s
13 39 17·61	·80	11·6	0		19·545	19·488	19·428	0	−0·01	t
15 32 26·89	·96	9·8	−0·119	87	19·537	19·479	19·419	+ 3	0·00	u
12 27 10·08	·95	11·4	−0·046	119	19·534	19·477	19·417	+ 1	−0·04	v
13 20 26·72	·88	8·3	−0·019	40	19·520	19·461	19·400	− 5	0·00	w
14 20 56·16	·86	16·4	+0·055	613	19·495	19·435	19·373	− 1	+0·03	x=72 Piscium
14 23 15·38	·89	11·4			19·480	19·420	19·357	+ 1	−0·07	y*
14 47 23·46	·85	5·5	−0·072	80	19·478	19·417	19·354	0	+0·01	y
15 43 9·93	·88	8·5	−0·060	57	19·469	19·408	19·344	+ 1	+0·05	z
15 16 15·02	·90	13·8	−0·037	83	19·437	19·374	19·309	+ 1	−0·02	α
16 49 10·64	90·01	9·2	0		19·437	19·374	19·308	+ 2	0·00	β
17 3 40·78	89·95	12·2	−0·053	71	19·425	19·361	19·295	− 1	0·00	γ
15 4 58·65	·83	10·0	0		19·386	19·321	19·254	+ 5	−0·02	δ
17 48 6·12	·94	9·3	0		19·369	19·303	19·235	+ 5	+0·01	ε
16 11 12·03	·83	12·9	0		19·367	19·301	19·232	− 1	−0·03	ζ
14 6 5·02	·87	11·1	−0·034	76	19·361	19·295	19·227	0	−0·03	η
16 10 29·09	·84	10·1	0		19·326	19·259	19·188	+ 1	+0·04	θ
15 32 44·75	·87	14·0	−0·008	612	19·295	19·226	19·155	+ 5	+0·02	ι=87 Piscium
17 2 53·24	·86	13·1	0		19·246	19·175	19·102	0	0·00	κ
15 46 7·43	·90	12·9	0		19·213	19·141	19·066	− 1	−0·02	λ
17 59 31·51	·79	13·4	+0·005	83	19·192	19·119	19·043	+ 5	−0·02	μ
10 47 13·28	·80	26·5	−0·050	92	19·069	18·992	18·913	+ 4	0·00	C
16 30 16·43	·79	26·5	−0·023	423	18·920	18·836	18·751	+ 2	+0·02	D

The same explanations apply to this table which are given with the corresponding table for the *Victoria* stars. In the last column, $N_3 - N_2$ is the correction required for the places communicated to Dr. Gill 1891 and used by him in the reduction of the *Sappho* observations in connection with the proper motions given in this table.

Digitized by Google

DIVISION IV.

I.

DETERMINATION OF NORMAL VALUES OF MEAN ERROR OF OBSERVATION FOR THE DIFFERENT OBSERVATORIES, OF CONSTANT ERROR OF THE DIFFERENT INSTRUMENTS, AND OF ABSOLUTE WEIGHTS OF THE SEPARATE RESULTS.

Though in most of the single series the number of observations is large enough to allow of a fairly approximate determination of accidental mean error of observation, still it is probable that the differences between the values of this m. e., found from the two or three different series of the same observatory, generally are due to chance to a greater extent than they may indicate real difference of accuracy. Excepting, therefore, some cases where strong intrinsic probability existed or conclusive evidence is found of a real difference, it is safer to combine the separate evaluations into normal values and to adopt them unchanged for the further treatment of all results coming from the same source.

For the nine observatories at which all of the three groups of stars were observed the separate determinations given in the following synopsis are taken from the preceding discussion.

Berlin.— Two positions of instrument (microscopes read in four positions).

M.E. of 1 obs.	*Iris*	$\pm 0^s.024$	$\pm 0''.30$	from 129 obs.	
	Victoria	0·021	0·32	„ 343 „	} of all stars, no difference of m. e. for different classes of stars
	Sappho	0·021	0·30	„ 401 „	
	Means	$\pm 0^s.022$	$\pm 0''.31$		

Cape.— Non-reversible instrument.

Observer : Maclear

Iris, eye and ear	$\pm 0^s.085$	$\pm 0''.81$	from 81 obs.					
Victoria, chron.	0·054	0·48	„ 127 „	} comp. st.; ref. st.	$\pm 0^s.040$	$\pm 0''.41$	from 85 obs.	
Sappho „	0·055	0·61	„ 132 „		0·054	0·44	„ 100 „	
Means for chron.	$\pm 0^s.054$	$\pm 0''.54$			$\pm 0^s.047$	$\pm 0''.43$		

Observer : Cox

Iris, eye and ear	$\pm 0^s.094$	$\pm 0''.69$	78 obs.				
Victoria, chron.	0·053	0·33	95 „	comp. st.; ref st.	$\pm 0^s.051$	$\pm 0''.32$	63 obs.

Observer : Pett

Victoria, comp. st.	$\pm 0^s.048$	$\pm 0''.40$	125 obs.;	ref. st.	$\pm 0^s.041$	$\pm 0''.28$	67 obs.
Sappho „	0·049	0·48	134 „	„	0·043	0·39	93 „
Means (chron.)	$\pm 0^s.048$	$\pm 0''.44$			$\pm 0^s.042$	$\pm 0''.34$	

Digitized by Google

Dublin.— Two positions of instrument.

Comp. st.	*Iris*	±0ˢ·044	±0″·66	142 obs.					
	Victoria	0·070	0·79	24 ,,	Ref. st.	±0ˢ·050	±0″·70	18 obs.	
	Sappho	0·048	0·67	127 ,,		0·038	0·60	100 ,,	
	Adopted means	±0·050	±0·69			±0·041	±0·63		

Greenwich.— Non-reversible instrument.

Comp. st.	*Iris*	±0ˢ·060	±0″·55	119 obs.				
	Victoria	0·061	0·82	145 ,,	Ref. st.	±0ˢ·044	±0″·62	103 obs.
	Sappho	0·051	0·70	162 ,,		0·053	0·68	41 ,,
	Means	±0·057	±0·69			±0·048	±0·64	

Leiden.— Two positions of instrument, except for the few observations of *Sappho* stars.

Iris	±0ˢ·028	±0″·39	from 139 obs.
Victoria	0·027	0·45	,, 194 ,, of all stars, no difference of accuracy for different classes
Sappho	0·023	0·24	,, 17 ,, almost exclusively of ref. stars
Adopted	±0·027	±0·41	

Leipzig.— Two positions of instrument; circle read by two microscopes only.

Comp. stars	*Iris*	±0ˢ·055	±0″·64	193 obs.				
	Victoria	0·049	0·61	259 ,,	Ref. st.	±0ˢ·032	±0″·45	126 obs.
	Sappho	0·057	0·60	290 ,,		0·041	0·45	87 ,,
	Means	±0·054	±0·62			±0·036	±0·45	

Melbourne.— Non-reversible instrument.

Comp. stars	*Iris*	±0ˢ·054	±0″·79	64 obs.				
	Victoria	0·050	0·64	150 ,,	Ref. st.	±0ˢ·039	±0″·52	96 obs.
	Sappho	0·051	0·51	160 ,,		0·049	0·63	107 ,,
	Victoria and *Sappho*	±0·051	±0·58			±0·044	±0·58	

Pulkowa.— Observations by eye and ear. Instrument in one position only.

Iris	±0ˢ·074	±0″·86	from 134 obs.
Victoria	0·093	0·76	,, all 485 obs. (only few of 3 of the ref. stars)
Sappho	0·074	0·64	,, 143 obs. comp. st.; ref. stars ±0ˢ·071 ±0″·41 70 obs.
Adopted general means	±0ˢ·081	±0″·76	

Oxford.— Observations by eye and ear, comparison stars only. Non-reversible instrument.

Iris	±0ˢ·061	±0″·66	51 obs.
Victoria	0·056	0·57	115 ,,
Sappho	0·065	0·60	96 ,,
Means	±0·060	±0·61	

Digitized by Google

At six observatories the *Victoria* and *Sappho* stars only were observed, with the following results for m. e.:—

Bordeaux.— Observations by eye and ear, probably; two positions of instrument.

Victoria, comp. st.	±0ˢ·087	±0″·86	101 obs.	(adopted also for *Sappho* comp. st.)	
Sappho, ref. st.	0·058	0·63	21 „	(adopted ±0ˢ·06	±0″·7).

Cambridge (Eng.).— Observations by eye and ear. One position of instrument.

Victoria, comp. st.	±0ˢ·064	±0″·53	136 obs.	Ref. st.	±0ˢ·059	±0″·61	57 obs.
Sappho „	0·076	0·66	140 „	„	0·065	0·61	60 „
Means	±0ˢ·070	±0″·60			±0ˢ·062	±0″·61	

Cambridge (Mass.).— One position of instrument.

Victoria, comp. st.	±0ˢ·073	±0″·78	134 obs.	Ref. st.	±0ˢ·048	±0″·81	44 obs.
Sappho „	0·065	0·94	118 „	„	not observed.		
Means	±0ˢ·069	±0″·86					

Cincinnati.— Two positions of instrument.

Victoria, comp. st.	±0ˢ·086	±0″·99	139 obs.	Ref. st.	±0ˢ·075	±0″·71	47 obs.
Sappho „	0·084	0·66	158 „	„	0·065	0·71	86 „
Means	±0ˢ·085	±0″·82			±0ˢ·069	±0″·71	

Vienna.— Two positions of instrument.

Victoria, comp. st.	±0ˢ·048	±1″·11	84 obs.	Ref. st.	±0ˢ·044	±0″·86	26 obs.
Sappho, all stars	0·061	0·70	70 obs.				
Adopted for comp. st.	±0ˢ·054	±0″·9		for Ref. st.	±0ˢ·052	±0″·8	

Washington.— One position of instrument.

Victoria, comp. st. only	±0ˢ·043	±0″·80	59 obs.	
Sappho	0·027	0·95	from 22 obs., mostly of ref. stars	
Adopted, for comp. stars	±0ˢ·043	±0″·9;	for ref. st.	±0ˢ·03 ±0″·9

The remaining eight series of *Victoria* stars gave the results:—

Algiers.— M. E. from all stars ±0ˢ·055 ±0″·75 (181 obs.); instrument used in one position.

Cordoba.— Comparison stars only observed, in one position of instrument, with very low power. M. E. 1 obs. ±0ˢ·040 ±0″·56 from 138 obs.

Hamburg.— Observations by eye and ear in two positions. M. E. for comparison stars ±0ˢ·116 ±1″·39 (92 obs.); for reference stars ±0ˢ·089 ±0″·91 (48 obs.).

Mt. Hamilton.— Two positions of instrument; means of readings of two circles in each of them. Comparison stars only. M. E. ±0ˢ·029 ±0″·34 (160 obs.).

Digitized by Google

Königsberg.— Instrument kept in same position. Comparison stars $\pm 0^s\cdot051$ $\pm 1''\cdot20$ (101 obs.) ; reference stars $\pm 0^s\cdot031 \pm 0''\cdot98$ (82 obs.).

Naples.— Two positions of instrument. M. E. of 1 obs. $\pm 0^s\cdot0243 \pm 0''\cdot363$, from 579 obs., sensibly the same for all classes of stars.

Paris.— Grand Instrument Méridien.— Non-reversible instrument. Observations by eye and ear. Comparison stars $\pm 0^s\cdot095 \pm 0''\cdot69$ (261 obs.) ; reference stars $\pm 0^s\cdot081 \pm 0''\cdot68$ (66 obs.).

Paris.— Cercle du Jardin.— Observations by eye and ear in one position of instrument. Comparison stars $\pm 0^s\cdot050 \pm 0''\cdot46$ (107 obs.) ; reference stars $\pm 0^s\cdot042 \pm 0''\cdot39$ (32 obs.).

It should be remembered that the m. e. found for the different observatories are not strictly comparable. When all observations belonging to a star are made in one position of the instrument, the values derived from the differences are the mean aggregate of accidental error of observation of the object to be determined, and of little more than the residual of accidental errors of observation in the corresponding determination of zero-points, while, when the observations were made in two positions, a part of the constant errors of the instrument is already included with the same aggregate. The necessary particulars relative to the method of observation are therefore repeated with the preceding synopsis.

The following is a synopsis of the values of total mean error of a result belonging to the lowest class of weights, viz. :—the m. e. which according to the differences between the results of the different series would be assumed for a result depending on a single observation on the supposition that the total weights vary with the number of observations in the assumed proportion. Generally the values of these total m. e. derived from the different series of the same observatory are in satisfactory accordance, and means can be taken from them at once—taking into account whenever necessary the unequal accuracy of the different determinations—which have been used in the further discussion.

Total Mean Error for Class weight = 1.

	Berlin			Cape			Dublin		
	s	′		s	′		s	′	
Iris	± 0·024	± 0·28	25 st.	± 0·064	± 0·66	27 st.	± 0·057	± 0·64	30 st.
Victoria	0·017	0·39	42 „	0·045	0·37	42 „	0·065	0·74	23 „
Sappho	0·022	0·35	43 „	0·041	0·39	41 „	0·056	0·71	43 „
Mean.....	± 0·021	± 0·34		(± 0·043 for chron. obs.	± 0·38)		± 0·059	± 0·70	

Digitized by Google

	Greenwich			Leiden			Leipzig		
Iris	± 0ˢ·052	± 0″·59	27 st.	± 0ˢ·027	± 0″·38	30 st.	± 0ˢ·060	± 0″·61	30 st.
Victoria	0·061	0·77	41 „	0·022	0·44	41 „	0·040	0·52	42 „
Sappho	0·062	0·69	42 „	0·030	0·46	27 „	0·044	0·67	43 „
Mean.....	± 0·059	± 0·68		± 0·026	± 0·42		± 0·048	± 0·60	

	Melbourne			Oxford			Pulkowa		
Iris	± 0ˢ·061	± 0″·89	26 st.	± 0ˢ·058	± 0″·77	26 st.	± 0ˢ·079	± 0″·87	28 st.
Victoria	0·036	0·69	41 „	0·051	0·58	37 „	0·091	0·72	41 „
Sappho	0·051	0·48	42 „	0·077	0·60	32 „	0·097	0·63	43 „
Mean.....	(± 0·044 for *Vic.* and *Sap.*	± 0·59)		± 0·062	± 0·65		± 0·089	± 0·74	

	Bordeaux			Cambridge (Eng.)			Cambridge (Mass.)		
Victoria	± 0ˢ·096	± 0″·92	38 st.	± 0ˢ·066	± 0″·87	41 st.	± 0ˢ·060	± 0″·92	41 st.
Sappho	0·078	0·75	24,23 „	0·079	0·80	42 „	0·054	1·08	33 „
Mean.....	± 0·087	± 0·84		± 0·072	± 0·84		± 0·057	± 1·00	

	Cincinnati			Vienna			Washington		
Victoria	± 0ˢ·078	± 0″·87	41 st.	± 0ˢ·055	± 0″·95	40 st.	± 0ˢ·043	± 1″·05	31 st.
Sappho	0·069	0·66	43 „	0·062	0·78	38 „	0·038	0·66	30 „
	± 0·074	± 0·77		± 0·059	± 0·87		± 0·041	± 0·86	

Additional *Victoria* Series.

Algiers	± 0ˢ·064	± 0″·67	37 stars.
Cordoba	0·052	0·69	37 „
Hamburg	0·091	1·33	41 „
Mt. Hamilton ...	0·034	0·37	36 „
Königsberg ...	0·063	1·10	42 „ (ϵ_δ with mag. corr.)
Naples	0·0204	0·48	41 „
Paris, G. I. M. ...	0·073	0·54	41 „
„ C. du J. ...	0·060	0·66	39 „

For the Cape observations, the *Iris* series had to be treated separately, being observed by eye and ear, while in the two later series the chronograph was used, giving much greater accuracy to the single observation not only for R.A. but also for Dec. by the greater leisure given to the observer to judge of the pointing for that co-ordinate. The accidental error could be derived in the Cape series for each of the observers; in the following discussion the proper means for their separate determinations are used corresponding to the determinations of total error which are valid at once for the mean of the observers.

Besides the Cape, a distinction between different series from one observatory has been made, in the present discussion, only in the case of Melbourne. The Melbourne *Iris* series is, from unknown reasons, of decidedly lower accuracy than the two following series, and was introduced into the farther discussion with its own apparent mean accidental and total errors, while for *Victoria* and *Sappho* the means from the two series were used.

Digitized by Google

In the following table :–

$\varepsilon\varepsilon$ (1) is the adopted square of total mean error of a result whose class weight = 1, expressed in units of the sixth decimal place for R.A. and of the fourth for Dec. ;

ε_1 the accidental m. e. of one observation within the personal and instrumental system under discussion ;

ε_c the mean constant error by which the results derived by the observer and his instrument remain affected, to be determined by the values found for ε and ε_1 by the formula—

$$\varepsilon_c{}^2 = \frac{\varepsilon\varepsilon\,(1)}{p_a} - \frac{\varepsilon_1\varepsilon_1}{n}$$

where p_a is the average class weight of a result and n the average number of observations in the series.

Observatory	$\varepsilon\varepsilon$ (1)		Aver. cl. w.		$\varepsilon\varepsilon(1):p_a$ in α and δ				Aver. no. obs.		$\varepsilon_1\varepsilon_1:n$ in α and δ				ε_c R.A.			ε_c Dec.			ε_c adopted	
	R.A.	Dec.	comp.	ref.	comp. st.		ref. st.		comp.	ref.	comp. st.		ref. st.		c.	r.	mean	c.	r.	mean	R.A.	Dec.
																	s			′	s	′
Berlin	441	1156	3·7	6·0	119	312	72	193	6·0	30·	81	160	16	31	6	7·	±0·006·	12	13	± 0·12	±0·006·	±0·12·
Cape, EE.	4096	4356	4·0	...	1024	1089	...	...	5·9	...	1361	959	...	...	0	...	...	12	...	0·13	10	0·12
„ chron.	1849	1444	4·1·	6·0	451	370	308	241	8·2	51	327	274	41	30	11	16	12	11	15	0·11	„	„
Dublin	3481	4900	3·1	4·7·	1123	1581	733	1032	3·6	15	694	1322	132	265	21	25	22	16	28	0·18	21	0·15
Greenwich	3481	4624	3·2·	4·6	1071	1423	757	1005	4·2	18	773	1133	128	227	17	25	19	17	28	0·20	17	0·20
Leiden	676	1764	2·9	4·1	233	608	165	430	3·6	8	202	467	91	210	6	9	6	12	15	0·13	6·	0·12·
Leipzig	2304	3600	3·9	6·0	591	923	384	600	6·9	27	452	557	48	75	12	18	13	19	23	0·20	13·	0·20
Melb., *Iris*	3721	7921	3·0	...	1240	2640	...	...	2·6	...	1122	2400	...	...	11	...	12	15·	...	0·17	10	0·16
„ *Vi., Sa.*	1936	3481	3·3	6·0	587	1055	323	580	4·0·	25	645	831	77	135	0	16	...	15	21	0·16	„	„
Oxford	3844	4225	2·7	...	1424	1565	...	...	2·7	...	1333	1378	...	...	10	...	10·	14	...	0·14·	15	0·15
Pulkowa	7921	5476	3·7	4·8·	2142	1480	1633	1129	6·5	13*	1009	889	505	421	34·	34	34	24	27	0·25	34	0·25
Bordeaux	7569	7056	1·9	3·0	3984	3714	2523	2352	2·0	4	3785	3698	900	1250	14	40	22	4	33	0·15	25	0·15
Camb. (Eng.)	5184	7056	3·0·	5·0	1700	2313	1037	1411	3·7	14·	1324	973	265	248	19	28	20	37	34	0·36	21	0·35
Camb. (Mass).	3249	10000	2·7·	5·0	1181	3636	650	2000	3·2	11	1488	2311	227	582	0	21	...	36	38	0·37	15	0·35
Cincinnati	5476	5929	3·3·	5·5	1635	1780	996	1078	3·9	17	1852	1724	280	297	0	27	...	7·	28	0·14	15	0·15
Vienna	3481	7569	2·0	3·7·	1740	3785	928	2018	2·2	6	1325	3682	451	1067	20	22	21	10	31	0·17	21	0·20
Washington	1681	7396	2·3	3·0	731	3216	560	2465	1·8	4	1027	4500	225	2025	0	18	...	0	21	...	10	0·15
Algiers	4096	4489	2·9	5·0	1412	1548	819	898	4·0	12	756	1406	252	469	26	24	25	12	18	0·13	25	0·15
Cordoba	2704	4761	3·2	...	884	1488	...	...	3·7	...	432	848	...	...	20	...	22	25	...	0·27	21	0·25
Hamburg	8281	17689	2·4·	5·0	3380	7220	1656	3538	2·7	13	4984	7156	609	637	0	32	...	8	50	0·23	20	0·25
Mt. Hamilton	1156	1369	3·2	...	361	428	...	...	4·3	...	196	269	...	...	13	...	14	13	...	0·14	13·	0·14
Königsberg	3969	12000	2·4·	5·2·	1620	4898	756	2286	2·7	21	986	5333	46	457	25	27	25·	0	43	...	25	0·25
Naples	417	2304	4·3	6·0	97	536	70	384	9·7	53	61	136	11	25	6	8	6	20	18	0·20	6·	0·20
Paris, G. C. M.	5329	2916	3·9	5·0	1366	748	1066	583	7·1	16·	1271	671	398	284	10	26	14·	24	0	0·21	15	0·25
„ C. du J.	3600	4356	2·7	3·7	1333	1613	924	1177	3·1	10	823	683	176	152	23	27	24	30·	21	0·29	25	0·25

* Excluding ref. st. *Vi.* A, which was observed as a fundamental star at Pulkowa.

Digitized by Google

Separate determinations of ε_c are made in the table for the comparison and the reference stars, using the same value of $\varepsilon\varepsilon$ (1) for both classes, but distinguishing the two values of ε_1 as derived above, and the corresponding values of p_a and n. Means were taken from the two determinations giving weight 4 to the value of $\varepsilon_c\,\varepsilon_c$ found from the comparison stars. Generally the reference stars make ε_c larger—which shows that the increase of real accuracy of the results with a considerable increase of the number of observations was not fully accounted for by the employment of only six classes of weights; the values of $\varepsilon_c\varepsilon_c$ found from such series in which the comparison stars only occur were increased therefore by one-sixth part, and the next multiple of 10 taken to derive the square root from, which in these cases is given with the means for ε_c.

As the numbers used for ε and ε_1 are only approximate, and in many instances subject to considerable accidental error, it is not surprising that in some instances the difference of the squares from which to determine ε_c is negative; the value 0 is given in the corresponding special column for ε_c, and the column "mean" left blank, except in one case when quite a small negative difference was found from the few reference stars observed, and was combined with $\varepsilon_c\,\varepsilon_c$ from the comparison stars as usually (Dec., Paris, G. I. M.).

Generally the means found for ε_c can without doubt be considered as fairly approximate, and the larger differences between them clearly indicate real differences of the accuracy attainable with the different instruments used and the methods of observation followed. It seems preferable however to smooth down the smaller variations and to make a somewhat more general classification of series; this has been done by adopting the values of ε_c given in the last column, supposing, as regards constant error, equal accuracy to have been arrived at in each of the series belonging to each one of the following classes:—

R.A., Class A— Berlin, Leiden, Naples
B— Cape, Melbourne, Washington
C— Leipzig, Mt. Hamilton
D— Oxford, Cambridge (Mass.), Cincinnati, Paris G. I. M.
E— Greenwich
F— Hamburg (accidentally only distinguished from following class)
G— Dublin, Cambridge (Eng.), Vienna, Cordoba
H— Bordeaux, Algiers, Königsberg, Paris C. du J.
I— Pulkowa

Digitized by Google

Dec., Class A— Cape
B— Berlin, Leiden
C— Mt. Hamilton
D— Dublin, Oxford, Bordeaux, Cincinnati, Washington, Algiers.
E— Melbourne
F— Greenwich, Leipzig, Vienna, Naples
G— Pulkowa, Cordoba, Hamburg, Königsberg, Paris (both inst.)
H— Cambridge (Eng.), Cambridge (Mass.).

On the contrary, with regard to accidental error, it was considered advisable finally to specialize a little more. It is quite probable that this error varied from one series to the next for the same observer generally to some extent, from changes of zenith distance, general atmospheric and other conditions, and in some instances the variation clearly appears to have been considerable. Instead of the general means for comparison stars, and those for reference stars derived above, or of the total general means when all of the stars appeared to have been observed with equal accuracy, special values of the accidental mean error of 1 obs. = ε_1 were introduced into the final determination of weights in the following cases :—

Dublin.— *Iris* and *Victoria* stars, the three pairs of values as given above. *Sappho*, for all stars not fainter than $7^m\cdot3$ $\varepsilon_1 = \pm 0^s\cdot036$ $\pm 0''\cdot47$; smaller stars $\pm 0^s\cdot050$ $\pm 0''\cdot72$.

Melbourne.— *Iris*, values from the series alone ; *Victoria* and *Sappho*, general means from both series.

Pulkowa.— Each of the three series taken by itself ; for *Sappho* general means from all stars used $\varepsilon_1 = \pm 0^s\cdot073 \pm 0''\cdot58$.

Cambridge (Mass.)— *Victoria*, R.A. of stars not below $7^m\cdot0$ $\varepsilon_1 \pm 0^s\cdot045$; from $7^m\cdot5$ to $7^m\cdot9$ $\pm 0^s\cdot065$; fainter stars $\pm 0^s\cdot086$; Dec. for all stars, $\varepsilon_1 \pm 0''\cdot78$. *Sappho*, all stars, $\varepsilon_1 = \pm 0^s\cdot065$ $\pm 0''\cdot94$.

For the Cape, the means taken from the determinations of ε_1 for the observers participating in the different series had to be employed, viz. :—

for *Iris*		$\pm 0^s\cdot0896$	$\pm 0''\cdot752$		
for *Victoria*	comp. st.	$\pm 0^s\cdot0521$	$\pm 0''\cdot447$;	ref. st.	$\pm 0^s\cdot0468$ $\pm 0''\cdot394$
for *Sappho*	comp. st.	$\pm 0\cdot0516$	$\pm 0\cdot495$;	ref. st.	$\pm 0\cdot0446$ $\pm 0\cdot388$

From the adopted values of ε_1 and ε_c the following table of weights is computed, the weight = 1 corresponding to a mean total error whose square is 0·001 for R.A. and 0·1 for Dec.:—

Digitized by Google

Absolute Weight of a Result for R.A. depending on n Observations.

n =	1	2	3	4	5	6	7	8	9	10	15	20	30	40
Berlin	1·9	3·5	4·9	6·1	7·2	8·1	9·0	9·7	10·4	11·0	13·3	15·5	17·2	18·4
Naples	1·5	3·0	4·2	5·3	6·2	7·1	7·9	8·6	9·3	9·9	12·3	13·9	16·1	17·5
Leiden	1·3	2·5	3·5	4·5	5·3	6·1	6·9	7·5	8·1	8·7	11·0			
Mt. Hamilton, comp.	1·0	1·7	2·2	2·5	2·8	3·1	3·3	3·5						
Washington, comp.	0·5	1·0	1·4	1·8	2·1	2·5	2·7	3·0						
„ ref.	1·0			3·1										
Melbourne, *Victoria* and *Sappho*	0·4	0·8	1·2	1·5	1·8	2·1	2·3	2·6	2·8	3·0	3·9	4·6	5·7	
„ *Iris*	0·3	0·6	0·9	1·2	1·5	1·7								
Cape, *Victoria*, comp.	0·4	0·7	1·0	1·3	1·6	1·8	2·1	2·3	2·5	2·7	3·6			
„ „ ref.	0·4				1·9					3·1	4·1	4·8	5·8	6·5
„ *Sappho*, comp.	0·4	0·7·	1·0	1·3	1·6	1·8	2·1	2·3	2·5	2·7	3·6			
„ „ ref.	0·5				2·0					3·3	4·3	5·0	6·0	6·7
„ *Iris*	0·1	0·2	0·4	0·5	0·6	0·7	0·8	0·9	1·0	1·1				
Leipzig, comp.	0·3	0·6	0·9	1·1	1·3	1·5	1·7	1·8	2·0	2·1	2·7			
„ ref.	0·7				2·6					3·2	3·7	4·0	4·4	4·7
Oxford, comp.	0·3	0·5	0·7	0·9	1·1									
Coraoba, comp.	0·5	0·8	1·0	1·2	1·3	1·4	1·5							
Cambridge (Mass.), *Victoria*, a	0·4	0·8	1·1	1·4	1·6	1·8	2·0	2·1	2·2	2·3	(a) stars to $7^m·0$			
„ „ b	0·2	0·4	0·6	0·8	0·9	1·1	1·2	1·3	1·4	1·5	(b) stars $7^m·5$ to $7^m·9$			
„ „ c	0·1	0·3	0·4	0·5	0·6						(c) fainter stars			
„ *Sappho* ...	0·2	0·4	0·6	0·8	0·9									
Greenwich, comp.	0·3	0·5	0·7	0·9	1·0	1·1	1·2	1·3	1·4	1·5				
„ ref.	0·4				1·2					1·7	1·9	2·1	2·3	2·4
Dublin, *Iris*	0·4	0·7	0·9	1·1	1·2	1·3	1·4							
„ *Sappho*, bright ...	0·5	0·9	1·1	1·2	1·4	1·5	1·5	1·6	1·7	1·7	1·9	1·9	2·0	
„ „ faint	0·3	0·6	0·8	0·9	1·1	1·2	1·3	1·3	1·4	1·5				
„ *Victoria*, comp. ...	0·2	0·3	0·5											
„ „ ref.	0·3			1·0	1·1									
Vienna, comp.	0·3	0·5	0·7	0·9	1·0									
„ ref.	0·3			0·9	1·0	1·1	1·2							
Paris, C. J., comp.	0·3	0·5	0·7	0·8	0·9	1·0	1·0	1·1	1·1	1·1				
„ ref.	0·4				1·0					1·2	1·3	1·4		
Königsberg, comp.	0·3	0·5	0·7	0·8	0·9	0·9	1·0	1·1						
„ ref.	0·6				1·2					1·4	1·5	1·5	1·5	
Algiers	0·3	0·5	0·6	0·7	0·8	0·9	0·9	1·0	1·0	1·1	1·2			
Cincinnati, comp.	0·1	0·3	0·4	0·5	0·6	0·7	0·8	0·9						
„ ref.	0·2				0·8					1·4	1·8	2·2	2·6	
Cambridge (Eng.), comp. ...	0·2	0·3	0·5	0·6	0·7	0·8	0·9	0·9						
„ ref. ...	0·2				0·8			1·1	1·2	1·2	1·4	1·6		
Paris, G. M., comp.	0·1	0·2	0·3	0·4	0·5	0·6	0·7	0·7	0·8	0·9	1·2			
„ ref.	0·1				0·5	0·8	0·9	1·0	1·0	1·1	1·5	1.8	2·3	2·6
Bordeaux, comp.	0·1	0·2	0·3	0·4	0·5	0·5								
„ ref.	0·2	0·4	0·5	0·7										
Pulkowa, *Iris*	0·2	0·2	0·3	0·4	0·4	0·5	0·5	0·5	0·6	0·6	0·7			
„ *Victoria*	0·1	0·2	0·2	0·3	0·3	0·4	0·4	0·4	0·5	0·5	0·6	0·6	0·7	0·7
„ *Sappho*	0·2	0·3	0·3	0·4	0·5	0·5	0·5	0·5	0·6	0·6	·0·7	0·8		
Hamburg, comp.	0·1	0·1	0·2	0·3	0·3									
„ ref.	0·1				0·5					0·8	1·1	1·3		

Digitized by Google

Absolute Weight of a Result for Dec. depending on n Observations.

n =	1	2	3	4	5	6	7	8	9	10	15	20	30	40
Berlin	0·9	1·6	2·1	2·5	2·9	3·2	3·4	3·6	3·8	4·0	4·5	4·9	5·3	5·5
Mt. Hamilton	0·7	1·3	1·7	2·1	2·3	2·6	2·8	2·9						
Leiden	0·5	1·0	1·4	1·7	2·0	2·3	2·5	2·7	2·9	3·1	3·7			
Cape, *Victoria*, comp.	0·5	0·9	1·2	1·6	1·8	2·1	2·3	2·5	2·7	2·9	3·6			
„ „ ref.	0·6				2·2					3·3	4·0	4·5	5·1	5·5
„ *Sappho*, comp.	0·4	0·7	1·0	1·3	1·6	1·8	2·0	2·2	2·4	2·6				
„ „ ref.	0·6				2·3					3·4	4·1	4·6	5·2	5·5
„ *Iris*	0·2	0·3	0·5	0·6	0·8	0·9	1·0	1·2	1·3	1·4				
Naples	0·6	0·9	1·2	1·4	1·5	1·6	1·7	1·8	1·8	1·9	2·0	2·1	2·3	2·3
Oxford	0·3	0·5	0·7	0·9	1·0									
Melbourne, *Victoria*, *Sappho* ...	0·3	0·5	0·7	0·9	1·1	1·2	1·4	1·5	1·6	1·7	2·1	2·4	2·7	
„ *Iris*	0·2	0·3	0·4	0·6	0·7	0·8								
Dublin, *Sappho*, bright* ...	0·4	0·8	1·0	1·3	1·5	1·7	1·8	2·0	2·1	2·2	2·7	3·0	3·3	
„ „ faint† ...	0·2	0·4	0·5	0·7	0·8	0·9	1·0	1·1	1·2	1·3				
„ *Iris*	0·2	0·4	0·6	0·8	0·9	1·0	1·2							
„ *Victoria*, comp. ..	0·2	0·3	0·4											
„ „ ref.	0·2			0·7	0·8									
Algiers	0·2	0·3	0·5	0·6	0·7	0·9	1·0	1·1	1·2	1·3	1·7			
Leipzig, comp.	0·2	0·4	0·6	0·7	0·9	1·0	1·1	1·1	1·2	1·3	1·4			
„ ref.	0·4				1·2					1·7	1·9	2·0	2·1	
Paris, C. J., comp.	0·4	0·6	0·8	0·9	1·0	1·0	1·1	1·1	1·2	1·2				
„ ref.	0·5				1·1					1·3	1·4	1·4		
Cincinnati, comp.	0·1	0·3	0·4	0·5	0·6	0·7	0·8	0·9						
„ ref.	0·2				0·8					1·4	1·8	2·1	2·5	
Cordoba	0·3	0·5	0·6	0·7	0·8	0·9	0·9							
Greenwich, comp.	0·2	0·4	0·5	0·6	0·7	0·8	0·9	1·0	1·1	1·1				
„ ref.	0·2				0·8					1·2	1·5	1·7	1·9	
Bordeaux, comp.	0·1	0·3	0·4	0·5	0·6	0·7								
„ ref.	0·2	0·4	0·5	0·7										
Washington, comp.	0·1	0·2	0·3	0·4	0·5	0·6	0·7	0·8						
„ ref.	0·1			0·5										
Paris, G. M., comp.	0·2	0·3	0·5	0·6	0·6	0·7	0·8	0·8	0·9	0·9	1·1			
„ ref....	0·2				0·6					0·9	1·1	1·2	1·3	
Pulkowa, *Iris*	0·1	0·2	0·3	0·4	0·5	0·5	0·6	0·6	0·7	0·7	0·9			
„ *Victoria*	0·1	0·3	0·4	0·5	0·5	0·6	0·7	0·7	0·8	0·8	1·0	1·1	1·2	1·3
„ *Sappho*	0·3	0·4	0·6	0·7	0·8	0·8	0·9	1·0	1·0	1·0	1·2	1·3	1·3	
Vienna, comp.	0·1	0·2	0·3	0·4	0·5									
„ ref.	0·1			0·5	0·6	0·7	0·8							
Cambridge (Eng.), comp. ...	0·2	0·3	0·4	0·5	0·5	0·6	0·6	0·6						
„ ref.	0·2				0·5					0·6	0·7	0·7		
Cambridge (Mass.), *Victoria* ...	0·1	0·2	0·3	0·4	0·4	0·4	0·5	0·5	0·5	0·6				
„ *Sappho* ...	0·1	0·2	0·2	0·3	0·3									
Königsberg, comp.	0·1	0·1	0·2	0·2	0·3	0·3	0·4	0·4						
„ ref....	0·1				0·4					0·6	0·8	0·9	1·1	
Hamburg, comp.	0·0·	0·1	0·1	0·2	0·2									
„ ref.	0·1				0·4					0·7	0·8	1·0		

* Stars to $7^m \cdot 3$. † Stars below $7^m \cdot 5$.

Digitized by Google

The different observatories are placed in each of these two tables in the order of the means of weights for results from 1, 5, 10 and 20 obs. of comparison stars.

The weights used in the final combination of the separate results into normals were taken from these tables. To reduce the weights assumed for the Right Ascensions to the same unit of m. e. in arc of great circle as assumed for the Declinations they must be multiplied by a factor, which on the supposition that the variations of m. e. in R.A. are insensible within Declinations not much exceeding 20°, approximately would be :—

from the *Iris* stars,	0·51
„ „ *Victoria* stars,	0·45
„ „ *Sappho* „	0·47

or in the mean 0·48.

II.

MAGNITUDES OF THE OBSERVED STARS, AND EXPERIMENTAL INVESTIGATION OF CORRECTIONS DEPENDING ON MAGNITUDE.

The large co-efficients sometimes found in the magnitude equations for R.A., show the necessity for having the magnitudes of the stars determined with considerable accuracy.

No special provision was made towards this end for the *Iris* stars, for which simply the *B.D.* magnitudes were used. Generally these are accurate enough for the purpose, and there is none among the *Iris* series in which the co-efficient of magnitude is so great as to make, for the reduction of the Right Ascensions, an error of a few tenths in the assumed magnitude of much importance. The following different determinations were collected afterwards from such sources as should give to some extent a control over the *B.D.* magnitudes which are placed against them. Results of photometric observations of some of the brighter stars made at the Potsdam Observatory, contained in Vol. IX of the publications of the observatory, came to hand of late and are added in the last column.

Digitized by Google

Iris Stars.

Star	Magnitude according to					Star	Magnitude according to				
	B.D.	Lal.	Bess. Z.	Berlin A.G.Z.	Potsd.		B.D.	Lal.	Bess. Z.	Berlin A.G.Z.	Potsd.
a′	7·0	6	7	7·2:	6·36	p	8·5	...		8·8	
a	7·7	8	7·8	7·8		q	7·8				
b	7·3	6	7·5	7·5	6·98	r	8·5		9		
c	6·8	7·0	7	7·3	6·57	r′	7·3	7	8		
d	7·5	8	8	8·0 (Comp. 9·2)	8·09	s	7·8		8		
e	6·0	6·0	7	6·1	5·91	t	8·6	9			
f	7·5	...	8	7·7		u	6·0	6·5			
g	8·5	...	8·7	...		v	7·5		8		
h	5·5	5·5	6·5	...		w	6·2	5	7		
i	7·2	7·2	8·0	7·2	7·12	w′	8·0	8	9		
k	7·8	8	...	...		x	8·2		8·5		
l	8·3	...	8·5	...		y	8·1		9		
m	6·0	6	...	...	5·86	z	7·6	9	8·2		
n	8·0	...	8·0			α	7·0	7	7		
o	6·0	7				β	8·3	9	9		

Means from naked eye magnitudes are, according to the Bradley Catalogue: e 5·8; h 5·3; m 5·6; α 6·4. The last with its companion $7^{m}\cdot2$ makes a plain naked eye star = $6^{m}\cdot0$ and appears considerably under-estimated in *B.D.*

For the *Victoria* stars several series of magnitude determinations were made at the Harvard College Observatory. The following results were communicated by Prof. Pickering:—

Star	B.D. Mag.	Estim. Mag.	Residuals	Photom. Mag.	Residuals	Photom. XXIV.	Photographic Mag.	Residuals
A	5·7	5·70	0 0 0	5·50	−1 0 +1			
B	5·0	5·26	+1 −1 −1	5·00	0 +1 −1	5·02		
a	7·7	7·93	+1 −1 +1	8·23	0 +1 0			
b	8·3	8·06	+4 −1 −4	8·66	−3 +2 0		8·0	+1 −1
c	8·5	8·43	+1 −1 +1	9·16	−1 +2 −2		9·6	0 +1
d	8·4	8·33	+2 −3 +2	9·06	−1 +1 −1		8·6	+2 −1
e	8·2	8·23	+3 −2 0	8·96	−2 +1 0		8·5	+1 −1
f	7·6	7·76	+2 −3 0	7·76	−1 0 0	7·85	8·1	+1 −1
g	8·5	8·50	0 0 0	9·03	+1 +2 −2		8·6	+1 −2
h	7·8	8·00	+2 −2 0	8·53	−1 +1 +1	7·90	8·2	+2 −:
i	7·8	7·57	−1 +2 −1 −1	8·15	−3 +7 −5 −1	7·95	8·0	0 −1

Digitized by Google

Star	B.D. Mag.	Est. Mag.	Residuals	Photom. Mag.	Residuals	Photom. XXIV.	Photographic Mag.	Residuals
k	7·5	7·93	+1 −1 +1	8·46	−1 +2 −2	8·35	9·0	0 0
l	8·0	7·90	+1 −4 +3	8·36	+1 −1 −1		8·4	+2 −1
m	5·0	5·23	+1 −2 +2	5·46	0 −1 0	5·52	5·6	+1 −1
n	6·8	6·73	−1 −1 +3	6·60	−1 +2 −1	6·80	7·3	−1 +1
o	7·5	8·06	+1 −1 −1	8·03	−1 +3 −1		7·7	−1 +1
p	7·7	7·50	0 0 0	8·00	0 0 0	7·85	7·2	−1 +2
q	8·3	8·40	+1 −2 +1	8·96	−1 +1 −1	9·05	9·4	−1 0
r	7·8	7·23	+3 0 −2	8·33	−1 +3 −1		8·0	−4 +3
s	7·8	7·90	−2 +1 +1	8·36	−1 +1 −1		8·0	+1 0
t	7·8	7·74	+1 +1 −2 +1 +1	8·40	0 +3 −2 0 −1	8·25	7·8	0 0
u	8·0	8·00	0 0 0	8·40	−2 +3 −1	8·30	8·4	−1 0
v	6·5	6·56	−1 +4 −4	6·83	+1 +1 −1	6·90	6·0	−2 +3
w	8·0	8·33	+2 −3 +2	8·60	0 +2 −2	8·85	9·8	−1 0
x	8·0	8·18	0 −2 +1 0 0	8·74	+1 +4 −2 0 −1		9·0	0 0
y	8·2	8·16	0 −2 0 0 0	8·62	0 +3 −2 −1 +1	8·45	9·0	−1 +1
z	8·5	8·42	+1 +1 +1 −2	9·17	−1 +5 −4 −1		9·2	−1 +1
α	8·2	8·04	−2 0 +2 +2 0	8·40	−2 +2 −3 +2 +1		8·8	−2 +1
β	8·2	8·04	−2 0 0 0 0	8·40	−2 +3 −2 −2 +3		8·4	+1 −1
γ	7·8	7·86	+1 −1 −1	7·50	0 −1 +1	7·70	8·2	0 −1
δ	8·2	8·28	−1 −1 +2 −3 +2	8·96	0 +2 −4 −1 +1		9·7	−2 +2
ε	6·3	6·60	−1 +2 −1	6·66	−2 +1 0	6·70	6·8	+2 −3
ζ	8·1	8·06	−1 −1 +1	8·43	0 +1 0			
η	8·2	8·12	+1 −3 +1 +1 +1	8·66	−3 +4 −3 +1 −1	8·45		
θ	8·5	8·28	−1 −3 −1 +2 +2	8·90	−2 +3 −2 0 +1			
ι	7·2	6·86	+1 +1 −3	7·26	−1 +1 −1	6·95		
ι′	8·2	8·20	0 0 0	8·13	−1 +1 −1			
κ	7·3	7·66	−2 +1 +3 −2 −2	7·86	−3 +4 −4 0 +1			
μ	6·5	6·40	+1 +1 −2	6·56	−2 −1 +2			
C	6·3	6·50	0 0 0	6·43	0 +2 −1			
D	6·3	6·10	+2 −3 +1	5·90	0 −1 +1			

Prof. Pickering remarks with regard to this table :— "The columns next following the *B.D.* mag. give a magnitude, and residuals expressed in tenths of a magnitude, derived from eye estimates made at the same time that the star was measured with the meridian photometer. The following columns give the photometric magnitude and residuals. These are not final magnitudes, but are still subject to further corrections. The magnitude given in the column 'Photom. XXIV.' is taken from the *H. C. O. Annals*, Vol. XXIV, Table I. Two photographic charts had been taken which contained a number of these stars. A measure of their brightness was made in each plate, and the magnitude and residuals derived from these measures are given in the last columns of the table. These last magnitudes are not directly comparable with those of the meridian photometer owing to the colour of the star.

Digitized by Google

The average deviation between the two sets of measures is $\pm 0^m\cdot17$. Hence, if errors are equal in both, the average deviation is $\pm 0^m\cdot12$, the probable error of each being $\pm 0^m\cdot10$. Rejecting star **h**, the average deviation is $\pm 0^m\cdot10$, the probable error $\pm 0^m\cdot08$. I should give greater weight to the measures made with the meridian photometer than to the other observations."

The Cambridge eye estimates agree with the *B.D.* system very nearly, and probably were directly referred to it. In the photometric magnitudes however a wide departure from that system is at once apparent. Substituting in the *B.D.* series for the magnitudes of the three brightest stars the following means of naked-eye estimates taken from the Bradley Catalogue, viz.: **A** 5·8, **B** 5·3, **m** 5·8, the following comparison can be made :—

B.D. Mag.	Mean Mag.	Photom., new obs.	Red.	Diff.	B.D. Mag.	Mean	V. XXIV.	Red.	Diff.
5·3 to 5·8	5·63	5·32 3 st.	5·57	−0·06	5·3 to 6·8	6·14	6·23 5 st.	6·22	+0·08
6·3 „ 7·3	6·65	6·76 8 „	6·70	+0·05	7·2 „ 7·8	7·62	7·82 8 „	7·52	−0·10
7·5 „ 8·0	7·79	8·26 15 „	7·86	+0·07	8·0 „ 8·3	8·14	8·62 5 „	8·21	+0·07
8·1 „ 8·5	8·29	8·75 15 „	8·20	−0·09					

The comparisons are satisfactorily represented by assuming the reduction to the number indicating the *B.D.* mag. for the

New photometer magnitudes $= -0\cdot16 - 0\cdot30(M - 7\cdot0)$

Photometric magnitudes of Vol. XXIV $= -0\cdot18 - 0\cdot20(M - 7\cdot0)$

where M means the *B.D.* magnitude.

In the following table—

the second column represents the *B.D.* magnitude, corrected for the three brightest stars ;

the third column contains the result of the new photometric determination at the Harvard College Observatory reduced to *B.D.* scale by the expression given above ;

the fourth gives the result from *H.C.O. Ann.*, Vol. XXIV, similarly reduced ;

the fifth column gives the mean from the preceding columns, which, taken to the nearest 0·1 only, has been assumed in the definitive reductions as the most probable magnitude of the star.

The following columns are added for comparison's sake only ; the Cambridge eye estimates "P." are repeated from Prof. Pickering's table, the values given under heading "S." are the means of estimates made with the observations for position with the Transit-Circle, as are those from Oxford.

Digitized by Google

Observed Magnitudes of Victoria Stars.

Star	B.D. Mag. *N.E. est.	H.C.O. phot. obs. reduced New obs.	Vol. XXIV	Mean	H.C.O. est. P.	S.	Oxford est.	Lal.	Bess. Z.
A	5·8*	5·70	...	5·75	5·70	5·6	...	...	...
B	5·3*	5·35	5·18	5·28	5·26	5·4	...	5·5	6
a	7·7	7·86	...	7·78	7·93	8·1	...	8	8
b	8·3	8·11	...	8·20	8·06	8·1	8·6	8·5	8·5
c	8·5	8·55	...	8·52	8·43	8·6	8·7	...	9
d	8·4	8·48	...	8·44	8·33	8·6	8·5	...	9
e	8·2	8·44	...	8·32	8·23	8·6	...	...	9
f	7·6	7·42	7·55	7·52	7·76	8·0	7·7	7·8	8
g	8·5	8·42	...	8·46	8·50	8·5	8·7	...	9
h	7·8	8·13	7·56	7·83	8·00	8·5	8·2	8·5	8·5
i	7·8	7·75	7·61	7·72	7·57	8·3	7·7	...	...
k	7·5	8·15	8·07	7·91	7·93	8·3	7·7	...	...
l	8·0	7·90	...	7·95	7·90	8·3	8·0	...	...
m	5·8*	5·66	5·58	5·68	5·23	5·9	5·3	6·2	...
n	6·8	6·50	6·66	6·65	6·73	7·5	6·8	...	7
o	7·5	7·72	...	7·61	8·06	8·3	7·7	...	...
p	7·7	7·63	7·53	7·61	7·50	7·8	7·8	8	8
q	8·3	8·41	8·61	8·44	8·40	8·6	8·5	...	9
r	7·8	7·93	...	7·86	7·23	8·1	7·3	8·2	8
s	7·8	7·96	...	7·88	7·90	8·3	7·8	8	8
t	7·8	8·00	7·91	7·90	7·74	8·0	7·9	8·0	8·5
u	8·0	7·94	7·92	7·95	8·00	8·5	7·9	8·5	8
v	6·5	6·82	6·82	6·71	6·56	7·2	6·8	6·7	7·0
w	8·0	8·14	8·47	8·20	8·33	8·5	7·9	...	9
x	8·0	8·28	...	8·14	8·18	8·3	7·7	...	9
y	8·2	8·10	8·03	8·11	8·16	8·2	8·3	9	...
z	8·5	8·56	...	8·53	8·42	8·5	8·7	...	...
α	8·2	7·88	...	8·04	8·04	8·0	...	9·5	8
β	8·2	7·88	...	8·04	8·04	8·5	8·1	8·5	8·2
γ	7·8	7·10	7·36	7·42	7·86	7·8	7·3	7·8	8·0
δ	8·2	8·44	...	8·32	8·28	8·5	8·3	...	9
ϵ	6·3	6·71	6·66	6·56	6·60	6·9	6·7	6·5	...
ζ	8·1	7·94	...	8·02	8·06	8·1	8·3	...	...
η	8·2	8·14	8·03	8·12	8·12	8·3	8·3	8·5	8·8
θ	8·5	8·29	...	8·39	8·28	8·5	8·3	9	...
ι	7·2	7·04	6·73	6·99	6·86	7·9	...	7·0	8
ι'	8·2	7·61	...	7·91	8·20	8·0	7·8	...	...
κ	7·3	7·61	...	7·46	7·66	8·0	...	8	8
λ	8·1	...	...	8·10	...	...	7·7	...	8
μ	6·5	6·55	...	6·52	6·40	6·4	6·4	6·5	7
C	6·3	6·48	...	6·39	6·50	6·3	...	7·0	...
D	6·3	5·95	...	6·12	6·10	6·0	...	...	...

Digitized by Google

Table of Observed Magnitudes of Sappho Stars.

Star	B.D.	Cbr. M.	Oxford	Berlin A. G. Zone	Leipzig A. G. Zone	Lal.	Bess. Z.	Potsd. Phot.	
A	7·3	...	...	...	7·9	8	7·5	7·25	
B	7·3	...	...	6·8	...	7	8	6·74	
a	7·7	7·6	7·7	...	8·5	...	8	...	
b	9·0	8·3	8·3	...	8·3	...	9	...	
c	8·6	...	8·7	...	8·7*	...	9·5	...	*Comp. 9·5
d	8·5	8·4	8·7	...	8·5	9	9	...	
e	7·0	7·3	7·0	...	7·1	8	8·0	6·98	
e′	8·3	8·4	8·3	...	8·5	9	...	...	Double.
f	7·3	7·8	7·3	...	7·9	9	8·5	7·64	
g	8·3	8·3	8·3	...	8·4	9	8·5	...	
h	8·4	8·3	8·0	...	8·7	10	9	...	
i	8·2	8·1	8·3	...	8·6	...	...	...	
k	6·5	6·7	6·7	...	7·7	7·0	7·0	6·55	
l	8·8	8·6	9·0	...	8·7	...	9	...	
m	8·7	8·2	...	...	...	...	...	...	
n	8·7	8·5	...	...	8·4	...	8·7	...	
o	8·2	8·4	8·3	...	8·5	...	...	...	
p	6·0	6·8	6·0	...	6·9	7	6·5	6·46	
q	8·5	8·4	8·7	...	...	...	8·5	...	
r	8·2	7·9	7·7	...	8·4	...	...	...	
s	8·0	8·0	8·0	...	8·0	9	8	...	Double.
t	8·5	8·5	...	...	...	...	8	...	
u	8·5	...	8·3	8·4	...	8·5	8·5	...	
v	7·8	8·2	7·7	...	8·3	8	8	...	
w	8·7	8·4	8·7	...	8·7	...	9	...	
x	(5·5)	5·9	6·0	...	6·0	6	...	5·85	
y*	9·0	8·6	9·3	...	...	...	...	...	
y	7·7	...	...	...	7·8	8	7·5	...	
z	8·5	...	8·3	8·6	...	7·5	8·5	...	
α	8·0	7·8	8·0	8·0	...	...	8	...	
β	8·0	7·8	8·0	8·2	...	8	...	...	
γ	8·6	8·4	8·7	8·7	...	8·5	8·5	...	
δ	6·4	...	6·3	6·9	7·0	6·5	6·8	6·12	
ε	8·8	8·3	8·7	8·7	...	...	...	...	
ζ	8·5	8·2	...	8·3	...	8·5	8	...	
η	8·2	8·2	...	...	8·4	8·5	9	...	
θ	8·5	8·1	...	8·3	...	8·2	8·5	...	
ι	(6·5)	...	6·0	6·3	...	6·2	7·0	6·30	
κ	8·3	7·9	8·0	8·4	...	...	...	...	
λ	8·8	8·2	8·3	9·0	...	...	...	...	
μ	8·0	7·6	8·0	8·1	...	8	8·5	...	
C	7·0	...	...	...	7·5	7	7	7·00	
D	7·2	...	...	7·2	...	7·5	7	6·85	

Digitized by Google

The Cambridge (Mass.) and Oxford estimates were made with the observations for position, and in some extra transits taken for magnitude only at the latter place.

The *B.D.* magnitudes were adopted, except for stars x and ι, which from means of the naked eye estimates were both assumed = $6^m.0$.—

Experiments to determine the influence of magnitude upon the observations of transits were made at the observatories of Berlin, the Cape, Cincinnati, Greenwich, Leiden, and Leipzig.

Tables of corrections derived by the observers themselves from the experiments made at Berlin by Dr. Küstner and at Leiden by each of the two observers E. Bakhuyzen and Wilterdink, are given above (pp. 416, 425). The Leiden tables were constructed from a graphical representation of the following results which only were communicated :—

				s		s
Diff. Mag.	2·6	ft. — br.	E.B.	+0·041	W.	+0·041
	4·6			+0·093		+0·081:

together with the differences of the Right Ascensions of the *Iris* stars as found by the two observers, viz. :—

			s
Mag.	6·1	$a_B - a_W$	= −0·015
	7·5		+0·020
	8·3		+0·051

the difference for mag. 4·0, or the mean magnitude of the time stars used, being zero.

The table for Bakhuyzen is confirmed by its very close agreement with the results found for the Leiden observations of the *Mars* stars 1877 from the comparison with Dr. Gill's heliometer triangulation.

Dr. Küstner communicated the following particulars about his experiments made on nine days, one in 1888 and eight in 1889.

"Aperture reduced to $0^m.140$. Screens used : I (simple wire net) diminishing brightness by $2^m.96$, II (double) dim. $5^m.10$, III (triple) dim. $7^m.28$. Most of the observations were made with screen II, which gave the following results :—

Zone	Mean Dec.	Mean Mag.	Images	ft. — br.	No. st.
	°			s	
South of − 10°	−18·8	2·56	4·8	+0·010	15
−10° to 0°	− 4·4	3·21	4·1	+0·022	15
0 „ +10	+ 5·7	3·29	3·3	+0·023	15
+10 „ +20	+15·5	2·93	2·8	+0·021	13
+20 „ +30	+23·7	3·04	2·9	+0·006	14
+30 „ +40	+36·6	3·37	2·9	+0·012	11
+40 „ Zen.	+48·1	2·74	3·4	+0·000·	16

Digitized by Google

"The condition of images was estimated in a scale in which 1 denotes the best and 7 the worst, 4, therefore, an average condition. The difference ft. – br. appears to be constant throughout the zone of time stars, and further decreases towards zero to the zenith. This agrees well with results of previous comparisons, in which the full aperture ($0^m \cdot 189$) was used (*see: Obs. of 670 stars*, p. 23); also the amount of difference has remained the same. For the northernmost stars, observed under less favourable atmospheric conditions, the former comparisons gave an increased amount of the difference, while here it appears to decrease; the general result, therefore, seems to be, that the influence of increased unsteadiness and diffusedness is not markedly perceptible. Confining, however, the comparison to the zone $-10°$ to $+30°$, and arranging the stars according to magnitude, the means become the following:—

Mag.	Mean mag.		Mean Dec.	Im.	ft. — br.	No. st.
	full	red.				
			°		s	
2·0 to 2·8	2·29	7·39	+12·0	3·4	+0·007	16
3·0 „ 3·3	3·14	8·24	+ 7·6	3·2	+0·027	24
3·6 „ 4·3	3·89	8·99	+10·4	3·4	+0·015	17
Means ...	3·13	8·23	+ 9·7	3·3	+0·018	(57)

"The observations made with Screen I gave, using all stars observed to the south of the zenith:—

Mag.	Mean mag.		Mean Dec.	Im.	ft. — br.	No. st.
	full	red.				
			°		s	
2·3 to 4·4	3·82	6·78	+ 9·7	4·0	+0·010	22
4·6 „ 6·0	5·11	8·07	+20·2	3·3	+0·020	19
Means ...	4·42	7·38	+14·6	3·8	+0·015	(41)

and the observations made with Screen III on four days, of 13 stars between Dec. $+50°$ and $-11°$:—

Mag.	Mean mag.		Mean Dec.	Im.	ft. — br.	No. st.
	full	red.				
			°		s	
1 to 2·4	1·2	8·5	+20·0	3·6	+0·020	13

Digitized by Google

"From these comparisons it can be inferred that no sensible equation existed between the observations of naked eye stars. It is possible, therefore, to at once combine the results obtained with the Screens I and II, and confining the comparison to the zone $-10°$ to $+30°$, and arranging the differences according to the reduced magnitude, the following means are found for eight groups :—

Mag. red.	Mag. full	No. stars	$\Delta\alpha$ (faint — bright) observed	computed	v
			s	s	s
6·8	3·8	10	+0·005	+0·008	—0·003
7·1	2·8	8	+0·018	+ 10	+ 8
7·4	3·2	12	+0·008	+ 12	— 4
7·8	4·0	10	+0·018	+ 16	+ 2
8·1	3·2	14	+0·017	+ 19	— 2
8·4	3·3	12	+0·033	+ 22	+ 11
8·8	4·5	10	+0·016	+ 25	— 9
9·1	4·0	10	+0·025	+ 28	— 3

The 'computed' values were obtained by graphic interpolation. The differences from the observed values amount to what should be expected, the probable error of one comparison being $\pm 0^s{\cdot}020$ and the average p. e. of the means therefore $\pm 0^s{\cdot}006$."

At the Cape, experiments were made in 1890 by the three observers here concerned, both for eye and ear and for chronographic observation, which gave the following results communicated by Dr. Gill :—

Obs. Maclear			Obs. Pett			Obs. Cox		
Mag.	ft. — br.	m. e.	Mag.	ft. — br.	m. e.	Mag.	ft. — br.	m. e.
			Observations made by Eye and Ear.					
	s	s		s	s		s	s
3·24	+ 0·063	± 0·016	3·31	+ 0·019	± 0·009	3·10	+ 0·009	± 0·014
4·74	+ 0·014	0·016	4·75	+ 0·026	0·009	4·84	+ 0·022	0·015
5·86	— 0·027	0·015	5·89	+ 0·037	0·010	5·89	+ 0·001	0·016
6·64	+ 0·016	0·015	6·62	+ 0·043	0·009	6·60	+ 0·036	0·016
	+ 0·016			+ 0·031			+ 0·017	
			Observations made by Chronograph.					
	s	s		s	s		s	s
3·13	+ 0·039	± 0·011	3·38	+ 0·021	± 0·010	3·09	+ 0·016	± 0·007
4·77	+ 0·028	0·009	4·81	+ 0·032	0·009	4·83	+ 0·013	0·009
5·87	+ 0·030	0·015	5·90	+ 0·023	0·009	5·88	+ 0·015	0·009
6·63	+ 0·032	0·011	6·62	+ 0·033	0·008	6·60	+ 0·001	0·009
	+ 0·032			+ 0·027			+ 0·011	

Digitized by Google

The magnitudes given in this table are taken from the Harvard and Oxford determinations. In the observations the brightness of the star was reduced for a part of the observed wires, by interposing a screen, about two magnitudes.* In the column "ft. – br." the difference of the times of transit reduced to the middle wire, and its apparent m. e. is given, each result depending generally on 80 observations. The limits of undiminished magnitude were in the four groups: 1 and 4·2; 4·3 and 5·2; 5·3 and 6·2; 6·3 and 7·0. In diminished brightness the stars were observed later throughout, by quantities sensibly constant between the limits of the experiment for each single observer and the same method of observation; the only exception is formed by the eye and ear observations of Pett, in which a regular progression with magnitude is shown; this however can be accidental and was not taken into account.

From Cincinnati observations, Prof. Porter communicated the following results:—

		s	s	
1890 March 24	ft. – br.	+ 0·032	± 0·014	13 stars
26		+ 0·085	0·018	11 „
April 1		+ 0·047	0·019	15 „
2		+ 0·048	0·024	11 „
3		+ 0·056	0·019	13 „
Mean		+ 0·054	± 0·006	

Stars of 6^m and brighter, averaging about 4^m to 5^m, were chosen for these observations, and reduced by means of a screen of bolting cloth held over the object glass to $7^m{\cdot}5 - 9^m{\cdot}5$. It is the observer's custom to reduce the field illumination by coloured glass until stars of 9 mag. can be seen, and to make no alteration during an evening's work. Consequently no change of illumination was made in this investigation. Dividing the stars according to their reduced magnitudes the means were found:

		s	s	
8^m and brighter,	ft.—br.	+ 0·042	± 0·013	22 stars
8·5		+ 0·048	0·015	25 „
9 to 9·5		+ 0·074	0·014	16 „

It does not appear whether the numbers appended to the separate means denote "mean" or "probable" error. In any case the means of the three groups might be united into one; but the objects contained in the last group appearing quite faint in the comparatively small telescope of the Cincinnati Meridian-Circle, it is quite probable that in this case the progression shown by the means is real. Assuming the diminution of brightness to have been $3^m{\cdot}5$, the retardation of observed transit for a diminution of 1 mag. would be

* From a later determination (made by Prof. Pritchard at Oxford) the diminution produced by the screen was found to be = 1·85 mags.

Digitized by Google

for stars not appearing fainter than $8^m\cdot0$	$+ 0^s\cdot0120$
„ of reduced mag. 8·5	$+ 0^s\cdot0137$
„ „ „ 9 to 9·5	$+ 0^s\cdot0211$

Hence in the *Victoria* series the average co-efficient of magnitude would be for the Cincinnati observations $= + 0^s\cdot0127$, and in the *Sappho* series $+ 0^s\cdot0131$.

A report on the Greenwich experiments is found in the *Monthly Notices*, Vol. LI., No. 8. The stars being reduced by two magnitudes, transits were observed later

by observer AD	$0^s\cdot024$	mean $0^s\cdot031$.
T	$0^s\cdot045$	
L	$0^s\cdot025$	
H	$0^s\cdot034$	

This mean has been assumed here to hold good also for the mean of the numerous occasional observers, and has been used without regard to the contradictory result of another series of comparisons in which the reduction amounted to $3^m\cdot7$ and the whole retardation was found only $= 0^s\cdot023$, but which seems entitled to lesser confidence.

With the Leipzig Meridian-Circle, Dr. Schumann made comparisons on eight days, which were communicated in detail. The following table contains their general results :—

1890		Stars	Limits of *B.D.* mag.	Screens	Estimated mag.		Observed Diff. ft. — br.
					full	reduced	
March	13	18	4·9 — 7·5	2	6·38	8·72	$+ 0^s\cdot007$
	15	24	4·9 — 7·6	2	6·58	8·74	$+ 0^s\cdot043$
Aug.	13	16	3·0 — 5·9	3	4·56	8·83	$+ 0^s\cdot016$
	15	20	3·0 — 5·9	2	4·83	8·06	$+ 0^s\cdot041$
	18	19	3·0 — 5·9	3	4·73	8·99	$+ 0^s\cdot051$
	19	9	3·0 — 5·7	3	4·52	8·88	$+ 0^s\cdot044$
	21	20	1–2 — 5·9	3	4·48	8·76	$+ 0^s\cdot011$
Sept.	18	15	1–2 — 5·8	3	4·51	8·75	$+ 0^s\cdot039$

The brightness was reduced by means of gauze screens held over the object glass, two of which were superposed over each other in some series and three in the others. The means of the estimates of magnitude made with the object glass free and screened at each transit, give the reduction by two screens $= 2^m\cdot58$ and by three screens $= 4^m\cdot28$. No marked difference however appears between the means, which simply taken from the results of the separate days become :

for 2 screens : est. mag. 5·93 and 8·51	ft. — br. =	$+ 0^s\cdot030$
„ 3 „ 4·56 „ 8·48		$+ 0^s\cdot032$

Digitized by Google

The general mean is: ft. − br. = + 0^{s}·031, for a reduction from 5^{m}·08 to 8^{m}·72, or + 0^{s}·0087 for one mag. No progression is apparent, the means of the deviations from the daily means "ft. − br." being:

		s		
for stars of *B.D.* mag.	1·2	− 0·005	2	stars
„ „	3·7	− 0·009	32	„
„ „	5·0	+ 0·006	38	„
„ „	5·8	+ 0·001	39	„
„ „	6·8·	+ 0·011	15	„
„ „	7·4	− 0·007	15	„

In these comparisons the illumination of the field always was adapted to the apparent brightness of the object observed, as had been the observer's practice in the previous observations. By some other series of comparisons however it was ascertained that the amount of illumination did not exercise any sensible influence upon the observation of transits.—

Comparing the co-efficient of the second term in the expressions found for the reductions of the Right Ascensions to the fundamental system (pp. 451, 570, 611) with the variations found from these experiments, the following results are obtained :—

	Var. of deviation from Berlin system for one mag.	Empirical correction	Var. of corr. of Berlin system	Assumed relative weight
		From *Iris* series		
	s	s	s	
Berlin	0·0000	0·0000	0·0000	3
Leiden	− 0·0007	0·0000	− 0·0007	3
Cape ½(M+P) e.e.	+ 0·0012	− 0·0128	− 0·0116	1
Leipzig	+ 0·0135	− 0·0087	+ 0·0048	1
Greenwich	+ 0·0226	− 0·0155	+ 0·0071	1
		From *Victoria* series		
	s	s	s	
Berlin	0·0000	0·0000	0·0000	3
Leiden	+ 0·0139	0·0000	+ 0·0139	3
Cape ¼(M+P+C) chr.	+ 0·0221	− 0·0127	+ 0·0094	2
Leipzig	+ 0·0110	− 0·0087	+ 0·0023	1
Greenwich	+ 0·0202	− 0·0155	+ 0·0047	1
Cincinnati	+ 0·0072	− 0·0127	− 0·0055	1
		From *Sappho* series		
	s	s	s	
Berlin	0·0000	0·0000	0·0000	3
Leiden	− 0·0030	0·0000	− 0·0030	1
Cape ½(M+P) chr.	+ 0·0229	− 0·0161	+ 0·0068	2
Leipzig	+ 0·0105	− 0·0087	+ 0·0018	1
Greenwich	+ 0·0238	− 0·0155	+ 0·0083	1
Cincinnati	+ 0·0162	− 0·0131	+ 0·0031	1

Digitized by Google

The means taken with the assumed relative weights are—

Variation for one magnitude of correction of Berlin system

		s		
from *Iris*	series	− 0·0002	w.	9
„ *Victoria*	„	+ 0·0056	„	11
„ *Sappho*	„	+ 0·0026	„	9

The mean from these three determinations is, taken according to the weights : + $0^s{\cdot}0029$; the simple mean of them : + $0^s{\cdot}0027$.

It appears from these comparisons that Dr. Küstner's Right Ascensions have become too small by the application of the negative correction derived by him from his experiments, and that the system of reduced Right Ascensions to which the different series were referred in the preceding discussion requires a positive correction, whose variation is found here = + $0^s{\cdot}003$ for one magnitude, and the zero of which can be approximately assumed at $4^m{\cdot}0$.

The mean + $0^s{\cdot}003$, however, here determined for the co-efficient seems inadmissible. It would make the correction of the Berlin observed transits

	m	s
for	5·0	+ 0·003
	6·0	+ 0·003
	7·0	− 0·001
	8·0	− 0·007
	9·0	− 0·013

or altogether insensible down to $7^m{\cdot}5$, and varying scarcely − $0^s{\cdot}01$ from that limit to $9^m{\cdot}0$. This is incompatible with Dr. Küstner's comparisons, the results of which, on account of the superior accuracy of the observations, and the broader extent of the experiments, appear entitled to at least as much confidence as those here derived from the combination of all the different series, most of which remain exposed to doubts of some or other kind. Following this consideration, therefore, finally half the amount of the correction here found was adopted as the most probable correction of the Berlin system to which the Berlin observations were reduced, and assuming the zero-point at $4^m{\cdot}0$, the correction

$$+ 0^s{\cdot}0015\ (M - 4{\cdot}0)$$

was applied to all the results for R.A. previously referred to that system.

Digitized by Google

ERRATA TO VOL. II., PART 2.

P. 430. First line after table, *for* 195 obs. *read* 196 obs.

„ 436. Two last lines, *for* 135 obs. *read* 159 obs.; *for* 134 obs. *read* 158 obs.

„ 473. Table, star e: Dec. *for* 20′ *read* 21′

„ 483. „ „ r „ „ 28′ „ 29′

„ 493. Table of means, No. obs. P, star a, *for* 2 *read* 3; g, *for* 5 *read* 3

„ 494. No. obs. M, star γ, *for* 2 *read* 3; P, stars γ, ε and ζ, *for* 2 *read* 3

„ 495. Table, R.A. a, *for* ·227 *read* ·234; g, *for* ·672 *read* ·668; γ, *for* ·329 *read* ·326; ε, *for* ·683 *read* ·674

„ „ „ Dec. g, *for* 23·53, *read* 23·48; γ, *for* 52·61 *read* 52·58; ε, *for* 48·99 *read* 48·97; ζ, *for* 14·78 *read* 14·77

„ „ „ No. obs. a, *for* 6 *read* 7; g, *for* 10 *read* 8; γ, *for* 6 *read* 7; ε, *for* 8 *read* 9; ζ, *for* 7 *read* 8

„ 517. „ star q: Dec. *for* 22″·17 *read* 22″·30

„ 536. Star b: *for* July 19 *read* July 29

„ „ „ the following observation is omitted: Aug 7, 2ˢ·246, 2″·66

„ 579. „ a, Cape R.A. should be 0ˢ·007 larger, No. obs. 7, W. 2·1, Diff. — 20; Dec., W. 2·3

„ 582. „ g, „ „ „ 0ˢ·004 smaller, „ 8 „ 2·3 „ — 18 „ 23·48, red. 23·12, W. 2·5

„ 595. „ γ, „ „ „ 0ˢ·003 „ „ 7 „ 2·1 „ — 37 „ 52·58 „ 52·22 „ 2·3

„ 596. „ ε, „ „ „ 0ˢ·009 „ „ 9 „ 2·5 „ — 20 „ 48·97 „ 48·61 „ 2·7

„ 597. „ ζ, „ „ No. obs., should be 8, W. 2·3; Dec. 14·77, red. 14·41, W. 2·5

„ 612. „ g; the R.A. of Bordeaux has not been excluded from the definitive mean. No. obs. 87 for both co-ordinates, weight R.A. 33·5 (including corrections for Cape).

„ „ Stars α, γ, ε, ζ: No. obs., *read* 97; 89, 90; 93; 75, 74; weights 39·5, 36·6, 37·2, 32·2; mean for γ should be 57ˢ·313 with correction for Cape result.

Digitized by Google

Digitized by Google

VOL. II., PART 3.

ON THE CONSTRUCTION OF

TABLES

FOR THE CORRECTION OF

HELIOMETER MEASURES FOR REFRACTION,

BY

HAROLD JACOBY.

Digitized by Google

Digitized by Google

ON THE CONSTRUCTION

OF

TABLES FOR THE CORRECTION OF HELIOMETER MEASURES

FOR REFRACTION.

By HAROLD JACOBY.

When I arrived at the Cape in the beginning of 1890, Dr. Gill had very nearly completed the investigation of the scales of the Cape Heliometer, and was about to begin the final reduction of a large mass of observations, some of which are contained in the present work. Dr. Gill had found the Besselian differential refraction formulæ not accurate enough for his purpose, because the modern heliometers are capable of measuring much greater distances than Bessel's, so he requested me to prepare a new set of tables. The method which most readily suggested itself for this purpose was to re-examine the Besselian formulæ, and to carry Bessel's expansions far enough to include all terms that could become appreciable, even for a distance of 8000″. The results of this work were communicated to the Royal Astronomical Society (M.N., vol. LI., p. 78), and the corresponding tables were separately printed at the Cape, as they were needed for immediate use. The discussion is here given in substantially the same form as that contained in the Monthly Notices, except that an error which I subsequently found has been corrected both in the formulæ and tables (M.N., vol. LI., p. 575).

In what follows I have used the deduction of Bessel's formulæ as given by Chauvenet (Spherical and Practical Astronomy, vol. II.), which does not, however,

Digitized by Google

differ in any respect from Bessel's own work in the Astronomische Untersuchungen (cf. Engelmann, Abhandl. von F. W. Bessel, vol. III., p. 343).

Assuming the notation :

δ_o, ζ_o, = the means of the true declinations and zenith distances of the two stars observed,

l_o, λ_o, = the apparent and true angles which the great circle joining the two stars makes with the vertical circle through the point midway between them,

s, σ, = the apparent and true distances of the stars,

a^*, = the usual Besselian quantity of vertical refraction,

a'', = the usual Besselian quantity for correcting micrometric measures for refraction,

p, π, = the apparent and true position angles,

q, = the true parallactic angle, corresponding to the zenith distance ζ_o,

ζ, ζ', = the true zenith distances of the two stars,

r, r', = the corresponding vertical refractions,

r_o, = the vertical refraction corresponding to ζ_o,

we shall obtain, following Chauvenet :

$$l_o - \lambda_o = \frac{b-a}{b+a} \sin 2\lambda_o + \tfrac{1}{2}\left(\frac{b-a}{b+a}\right) \sin 4\lambda_o + \quad . \quad . \quad . \qquad (1)$$

$$s - \sigma = -\sigma\left\{\frac{a-1}{a} + \frac{b-a}{ab}\cos^2\lambda_o - \frac{1}{2a}\left(\frac{b-a}{b+a}\right)^2 \sin^2 2\lambda_o + \quad . \quad . \quad .\right\} \qquad (2)$$

in which :

$$a = \frac{\sin \zeta_o}{\sin (\zeta_o - r_o)}, \qquad (3)$$

$$b = \frac{\zeta - \zeta'}{\zeta - \zeta' - (r - r')}. \qquad (4)$$

Bessel puts :

$$r - r' = \frac{dr_o}{d\zeta_o}(\zeta - \zeta'),$$

but, in order to secure sufficient accuracy, it will be necessary to write :

$$r - r' = \frac{dr_o}{d\zeta_o}(\zeta - \zeta') + \tfrac{1}{6}\frac{d^3 r_o}{d\zeta^3{}_o}(\zeta - \zeta')^3,$$

or, for brevity,

$$r - r' = \frac{dr_o}{d\zeta_o}(\zeta - \zeta') + n(\zeta - \zeta')^3,$$

---

* Chauvenet, *loc. cit.*, vol. II., Table II.

Digitized by Google

and, consequently, the correction required by Bessel's b will be

$$+n\,(\zeta-\zeta')^2,$$

or with sufficient accuracy

$$+n\,\sigma^2\cos^2\lambda_\circ\,;$$

and since

$$\lambda_\circ=\pi-q,$$

the correction required by b becomes:

$$+n\,\sigma^2\cos^2(\pi-q).$$

This small correction required by Bessel's b will be taken into account later on. In the case of a no appreciable correction will be necessary, on account of putting, as Bessel did,

$$r_\circ=\tfrac{1}{2}(r+r').$$

We shall have then, following Chauvenet:

$$a=1+\alpha$$
$$b=1+\alpha+\alpha''\tan^2\zeta_\circ,$$

and therefore, including terms of the second order:

$$\frac{a-1}{a}=\alpha\,(1-\alpha)$$
$$\frac{b-a}{ab}=\alpha''\tan^2\zeta_\circ\,(1-2\alpha-\alpha''\tan^2\zeta_\circ)$$
$$\frac{1}{2a}\left(\frac{b-a}{b+a}\right)^2=\tfrac{1}{8}\,\alpha''^2\tan^4\zeta_\circ,$$

which, substituted in equation (2), give:

$$s-\sigma=-\sigma\,[\alpha\,(1-\alpha)+\alpha''\tan^2\zeta_\circ\cos^2\lambda_\circ\,(1-2\alpha-\alpha''\tan^2\zeta_\circ)-\tfrac{1}{8}\,\alpha''^2\tan^4\zeta_\circ\sin^2 2\lambda_\circ].$$

In the second term in the square brackets we can put α'' for α, since the error caused thereby is only:

$$2\,\alpha''\tan^2\zeta_\circ\cos^2\lambda_\circ\,(\alpha-\alpha''),$$

which cannot exceed 0″·003 at 80° zenith distance.

And if we also put:

$$k_1=\frac{\alpha''}{1+\alpha''\,(1+\sec^2\zeta_\circ)}=\alpha''\,[1-\alpha''\,(1+\sec^2\zeta_\circ)] \qquad (5)$$

we obtain:

$$s-\sigma=-\sigma\,[\alpha\,(1-\alpha)+k_1\tan^2\zeta_\circ\cos^2\lambda_\circ-\tfrac{1}{8}\,\alpha''^2\tan^4\zeta_\circ\sin^2 2\lambda_\circ]. \qquad (5a)$$

Digitized by Google

Now let :

$$M = k_1 \tan^2 \zeta_o \cos^2 \lambda_o, \tag{6}$$

and we have :

$$s - \sigma = -\sigma \left[a(1-a) + M - \tfrac{1}{2}\left(\frac{a''}{k_1}\right)^2 M^2 \tan^2 \lambda_o\right]. \tag{7}$$

We may reject σa^2, whose maximum value for a distance of 8000″ is 0″·0006 ; and substitute unity for $\frac{a''}{k_1}$, which cannot introduce an error greater than 0″·0055. Putting also :

$$\lambda_o = \pi - q,$$

equations (6) and (7) become :

$$M = k_1 \tan^2 \zeta_o \cos^2 (\pi - q) \tag{8}$$

$$s - \sigma = -\sigma \left[a + M - \tfrac{1}{2} M^2 \tan^2 (\pi - q)\right]. \tag{9}$$

Returning now to the small correction required by b, we have, since :

$$b - a = a'' \tan^2 \zeta_o,$$

the correction required by a'' equal to :

$$\frac{\text{correction of } b}{\tan^2 \zeta_o}$$

or

$$\frac{n\, \sigma^2 \cos^2 (\pi - q)}{\tan^2 \zeta_o};$$

and from the usual Besselian formula :

$$s - \sigma = -\sigma\, a'' \{\tan^2 \zeta_o \cos^2 (p - q) + 1\}$$

we see that the small correction required by $s - \sigma$ will be given with sufficient accuracy by :

$$\text{correction} = -\frac{n\, \sigma^3 \cos^2 (\pi - q)}{\tan^2 \zeta_o} [\tan^2 \zeta_o \cos^2 (\pi - q) + 1]$$

$$= -n\, \sigma^3 [\cos^4 (\pi - q) + \cos^2 (\pi - q) \cot^2 \zeta_o].$$

To obtain the value of n, we have :

$$r_o = a' \tan \zeta_o$$

when a' is the usual Besselian quantity for vertical refraction, with the argument "true zenith distance." Differentiating this equation, we have :

$$\frac{dr_o}{d\zeta_o} = a' \sec^2 \zeta_o \sin 1'' + \tan \zeta_o \frac{da'}{d\zeta_o} \tag{10}$$

by means of which a value of $\frac{dr_o}{d\zeta_o}$ may be computed for various zenith distances, the value of $\frac{da'}{d\zeta_o}$ being derived from the vertical refraction tables.

Digitized by Google

Now in the equation :

$$r-r' = \frac{dr_\circ}{d\zeta_\circ}(\zeta-\zeta') + n(\zeta-\zeta')^3$$

suppose :

$$\zeta-\zeta' = 7200'',$$

we shall then have :

$$\zeta = \zeta_\circ + 3600''$$
$$\zeta' = \zeta_\circ - 3600''.$$

With these values of ζ and ζ' we can derive r and r' from the vertical refraction tables, and the value of $\frac{dr_\circ}{d\zeta_\circ}$ having just been obtained, we can compute n thus :

$$n = \frac{r-r'-7200\,\frac{dr_\circ}{d\zeta_\circ}}{(7200)^3}.$$

The solution of the problem in hand is therefore contained in the following equations :—

$$\left.\begin{aligned}
\frac{dr_\circ}{d\zeta_\circ} &= a' \sec^2\zeta_\circ \sin 1'' + \tan\zeta_\circ \frac{da'}{d\zeta_\circ} \\
n &= \frac{r-r'-(7200)\frac{dr_\circ}{d\zeta_\circ}}{(7200)^3} \\
k_1 &= \frac{a''}{1+a''(1+\sec^2\zeta_\circ)} \\
\mathrm{M} &= k_1 \tan^2\zeta_\circ \cos^2(\pi-q) \\
\mathrm{A} &= +\tfrac{1}{2}\,\mathrm{M}^2 \tan^2(\pi-q) \\
\mathrm{B} &= +n\,[\cos^4(\pi-q) + \cos^2(\pi-q)\cot^2\zeta_\circ] \\
s-\sigma &= -\sigma(a+\mathrm{M}) + \mathrm{A}\sigma - \mathrm{B}\sigma^3
\end{aligned}\right\} (11)$$

The quantity $\zeta_\circ$ may generally be arrived at by a single computation, based on the mean hour angle $t_\circ$ and the mean declination $\delta_\circ$ of the two stars observed. If, however, we observe very large distances very far from the zenith, it will be advisable to compute ζ and ζ' separately, and employ

$$\zeta_\circ = \tfrac{1}{2}(\zeta+\zeta').$$

Digitized by Google

The above equations (11) give the refraction corresponding to a mean state of the barometer and thermometer. In order to get its value for the actual state of the atmosphere, we must employ in place of a'' the quantity κ, whose value is obtained from the usual refraction tables by means of the formula :

$$\kappa = a'' \beta^{A''} \gamma^{\lambda''},$$

and instead of a, we must use :

$$k = a\beta^{A}\gamma^{\lambda}.$$

The present tables are intended to take the place of the use of κ and k. They are founded on the constants of the Pulkowa refractions, and their manner of construction will now be explained.

It is evident that the small term $B\sigma^3$ will not require any meteorological correction. I shall also neglect the meteorological correction of the term $A\sigma$, since from the last term of equation ($5a$) we see that this correction can never exceed :

$$0''{\cdot}04\ \sigma a''^2 \tan^4 \zeta_o,$$

or $0''{\cdot}006$ at 75° zenith distance. There remains only the meteorological correction of the quantity :

$$-\sigma\ (a + M),$$

which quantity may be called the " mean refraction."

It will be convenient to arrange matters so that the meteorological correction may be found by simply multiplying the quantity :

$$-\sigma\ (a + M)$$

by a *meteorological factor*, to be taken from the tables, and adding the product to :

$$-\sigma\ (a + M).$$

For this purpose, let :

f = the proper meteorological factor for k_1.

$f + x$ = the proper meteorological factor for a.

Then we shall have :

$$\text{meteorological correction} = -\sigma\ (a + M)\, f - \sigma x a. \qquad (12)$$

Now suppose that, in consequence of meteorological changes, k_1 becomes $k_1 + dk_1$. It also becomes $k_1\ (1 + f)$.

Therefore :

$$k_1 + dk_1 = k_1\ (1 + f),$$

or,

$$f = \frac{dk_1}{k_1}. \qquad (13)$$

Digitized by Google

Differentiating the third of equations (11) gives :

$$\frac{dk_1}{da''} = \left(\frac{k_1}{a''}\right)^2,$$

which, substituted in (13), gives :

$$f = \frac{k_1}{a''^2}\, da''.$$

But with the usual notation of the vertical refraction tables :

$$da'' = a''\,(\beta^{A''}\gamma^{\lambda''} - 1),$$

so that :

$$f = \frac{k_1}{a''}\,(\beta^{A''}\gamma^{\lambda''} - 1)\,;$$

similarly :

$$f + x = \beta^{A}\gamma^{\lambda} - 1.$$

In both of these equations we shall produce no appreciable error if we write unity for A and A″, so we have, finally :

$$f = \frac{k_1}{a''}\,(\beta\gamma^{\lambda''} - 1) \qquad (14)$$

$$f + x = \beta\gamma^{\lambda} - 1, \qquad (15)$$

from which we easily obtain, by subtraction :

$$x = \frac{k_1}{a''} - 1 - \beta\gamma^{\lambda}\left(\frac{k_1}{a''}\gamma^{\lambda''-\lambda} - 1\right).$$

I have neglected the last term of this equation ; its maximum effect on $s - \sigma$ cannot exceed 0″·004 at zenith distance 70°, and 0″·015 at 80° ; we may therefore write :

$$x = \frac{k_1}{a''} - 1,$$

and—

$$-\sigma x a = -\sigma a\left(\frac{k_1}{a''} - 1\right).$$

This equation gives us the value of the last term of equation (12), and it may be incorporated with the last of equations (11), without producing any appreciable error. To do this we introduce K, defined by :

$$\mathrm{K} = a + a\left(\frac{k_1}{a''} - 1\right) = k_1\frac{a}{a''},$$

and the last of equations (11) becomes :

$$s - \sigma = -\sigma(\mathrm{K} + \mathrm{M}) + \mathrm{A}\,\sigma - \mathrm{B}\,\sigma^3 - \sigma(\mathrm{K} + \mathrm{M})\,f \qquad (16)$$

after we have added the meteorological correction.

Digitized by Google

In order to tabulate f, I proceed as follows :—Since λ'' can never differ much from unity, and since :

$$f = f_{\lambda''=1} + \left(\frac{d\,f}{d\,\lambda''}\right)_{\lambda''=1} (\lambda'' - 1),$$

we have from equation (14) :

$$f = \frac{k_1}{a''} (\beta\,\gamma - 1) + \frac{k_1}{\mu\,a''} \beta\gamma \log \gamma\,(\lambda'' - 1),$$

when μ is the modulus of the common system of logarithms ; and if we put :

$$f_0 = \beta\gamma - 1$$

$$Q_0 = \frac{k_1}{\mu\,a''} \log \gamma\,(\lambda'' - 1),$$

this equation becomes :

$$f = \frac{k_1}{a''} f_0 + Q_0 + f_0\,Q_0. \qquad (17)$$

If we give to $\frac{k_1}{a''}$ the constant value 0·995, we shall produce only the following maximum errors in the refractions :—

									″
At 45° zenith distance			...	...	...	...	...		0·002
,, 60°	,,	,,	...	...	...	...	...		0·004
,, 70°	,,	,,	...	...	...	...	...		0·005
,, 80°	,,	,,	...	...	...	...	...		0·025

To allow for any possible difference between the indications of the external thermometer and that attached to the barometer, put :

$t - T$ = excess of attached over external thermometer in degrees Fahrenheit,

y = the increase in log β per degree Fahrenheit $= -\ 0{\cdot}0000386$,

then f will require the correction :

$$df = 0{\cdot}995\,\frac{y}{\mu}\,(f_0 + 1)\,(t - T),$$

or with sufficient accuracy :

$$df = -\ 0{\cdot}000089\,(t - T),$$

so that (17) becomes :

$$f = 0{\cdot}995\,f_0 + Q_0 + f_0\,Q_0 - 0{\cdot}000089\,(t - T). \qquad (18)$$

This equation might be used for tabulating f ; but for some reasons it appeared desirable to transform it in such a way that the meteorological correction might always be positive.

Digitized by Google

If R be the mean refraction, and f the meteorological factor, and if we put :

v = an auxiliary number,

we have :

$$vR + vR\left(\frac{1}{v}f + \frac{1-v}{v}\right) = R\ (1+f) = \text{actual refraction}, \qquad (19)$$

which shows that we may substitute for f the quantity :

$$\frac{1}{v}f + \frac{1-v}{v},$$

provided we substitute the quantity vR for R. Now, if we select v such that :

$$v < f+1,$$

then

$$\frac{1}{v}f + \frac{1-v}{v} > 1;$$

in other words, the meteorological factor will always be positive.

For convenience in the computation of the tables, I put :

$$v = 0{\cdot}82916, \text{ and therefore } \frac{1-v}{v} = 0{\cdot}20604.$$

Equation (18) then becomes :

$$\text{Met. factor} = \frac{6}{5}(\beta\gamma - 1) + 0{\cdot}20604 + [0{\cdot}0814]\ Q_o + [0{\cdot}0814]\ Q_o\ (\beta\gamma - 1) - 0{\cdot}0001\ (t - T), \qquad (20)$$

and the refraction, uncorrected for meteorological changes, will become, by (11) and (16) :

$$\left.\begin{aligned} vM &= vk_1 \tan^2 \zeta_o \cos^2 (\pi - q) \\ s - \sigma &= -\sigma\ (vK + vM) + A\sigma - B\sigma^3 \end{aligned}\right\}. \qquad (21)$$

Log vK and log vk_1

may be taken from Table I. with the argument log $\tan^2 \zeta_o$.

$A \times 10^3$, and $B \times 10^9$

may be taken from Tables I. A. and I. B. They need only be multiplied by $\left(\frac{\sigma}{1000}\right)$ and $\left(\frac{\sigma}{1000}\right)^3$ to give the terms $A\sigma$ and $B\sigma^3$.

$$\frac{6}{5}(\beta\gamma - 1) + 0{\cdot}20604$$

may be taken from Table II., with the arguments : barometer in English inches, and thermometer in Fahrenheit degrees.

$$[0{\cdot}0814]\ Q_o$$

may be taken from Table II. A., with the arguments log $\tan^2 \zeta_o$ and "external thermometer." It is called the "first correction of the meteorological factor."

Digitized by Google

$$[0{\cdot}0814]\ Q_0\ (\beta\gamma - 1)$$

may be taken from Table II. B., using as arguments the quantities derived from Table II. and Table II. A.

$$-0{\cdot}0001\ (t - T)$$

may be taken, if desired, from Table II. C.

Although the tables are intended primarily for the computation of refractions when the *true* position angle and distance are known, they may also be used when we have only the observed distance and position angle. We can easily show that if we put :

$$N = -\frac{s - \sigma}{\sigma},$$

then :

$$\sigma - s = s\,N + \frac{s^2\,N^2}{s}$$

with an error that cannot exceed $0''{\cdot}002$ even at 80° zenith distance. But $s\,N$ is the refraction computed by the tables, except that the apparent distance s has been used in place of the true distance σ. It is therefore evident that we can employ the apparent distance in computing the refraction, provided we apply to the result the correction :

$$\frac{s^2\,N^2}{s},\ \text{or}\ \frac{[\text{Refraction}]^2}{\text{Distance.}}$$

This latter quantity has been tabulated, and may be taken from Table III. with the arguments : " apparent distance " and " refraction."

The position angle used should be the true position angle ; so that if we wish to correct an observation of both position angle and distance, as in the case of a planet and comparison star, we would first correct the observed position angle, which does not require a knowledge of the distance. With the *corrected* position angle and the *observed* distance we would compute the refraction in distance, and then apply the correction from Table III.

I shall now take up the formula for correcting position angles. If we substitute the values already given for a and b in equation (1), we have :

$$l_0 - \lambda_0 = \frac{a''\tan^2\zeta_0 \sin 2\lambda_0}{2\,(1+a) + a''\tan^2\zeta_0} + \tfrac{1}{2}\frac{a''^2\tan^4\zeta_0 \sin 4\lambda_0}{[2\,(1+a) + a''\tan^2\zeta_0]^2} + \ldots \quad (22)$$

Digitized by Google

If we substitute a'' for a in this equation the error cannot exceed $0''{\cdot}2$ in $l_\circ - \lambda_\circ$; and if we omit the last term we shall not introduce a greater error than $1''{\cdot}6$ at 80°, or $0''{\cdot}1$ at 70°. Making these changes, we have:

$$l_\circ - \lambda_\circ = \frac{a'' \tan^2 \zeta_\circ \sin 2\lambda_\circ}{2(1+a'') + a'' \tan^2 \zeta_\circ} = \frac{a'' \tan^2 \zeta_\circ \sin 2\lambda_\circ}{2 + a''(1+\sec^2 \zeta_\circ)},$$

which, by means of equation (5), becomes:

$$l_\circ - \lambda_\circ = \frac{a''}{1+\frac{a''}{k_1}} \tan^2 \zeta_\circ \sin 2\lambda_\circ,$$

and if we give to $\frac{a''}{k_1}$ the constant value 1·005, we have:

$$l_\circ - \lambda_\circ = [9{\cdot}69789]\, a'' \tan^2 \zeta_\circ \sin 2\lambda_\circ, \qquad (23)$$

with errors as follows:

At 80° zenith distance	1·6
„ 70° „ „	0·2
„ 60° „ „	0·6
„ 50° „ „	0·1

If we let F be the meteorological factor for equation (23), we shall have:

$$F = \beta\gamma^{\lambda'} - 1,$$

or by (14):

$$F = \frac{a''}{k_1} f';$$

and if we put:

$$F = 1{\cdot}005\, f' \qquad (24)$$

we shall only introduce the following insignificant errors in the refraction:—

At 80° zenith distance	1·2
„ 70 „ „	0·2
„ 60 „ „	0·0
„ 50 „ „	0·1

It will be convenient to arrange matters so as to use the same meteorological factor for position angles and distances. We shall then be able to derive it from the

Digitized by Google

tables already given. Now, if R be the refraction in position angle, and V and c two constants, we can use in place of F the quantity :

$$\frac{1}{V}F + \frac{1-V}{V} + c,$$

provided we substitute $(1-c)$ VR for R.

For :

$$(1-c)\,VR + (1-c)\,VR\left[\frac{1}{V}F + \frac{1-V}{V} + c\right] = RF + R - c\,VR\left[\frac{1}{V}F + \frac{1-V}{V} + c\right]$$

$$= \text{actual refraction, very nearly,}$$

since the quantity :

$$-c\,VR\left[\frac{1}{V}F + \frac{1-V}{V} + c\right]$$

only has the following maximum values :—

At 80° zenith distance	3·6
„ 70° „ „	0·8
„ 60° „ „	0·3

Now, if t be the tabular meteorological factor for distances, we have by (19) and (24) :

$$t = \frac{1}{v}f + \frac{1-v}{v} = [0{\cdot}07919]\,F + 0{\cdot}20604,$$

so that if t is to be also our meteorological factor for position angles, we must have :

$$\text{Log}\,\frac{1}{V} = 0{\cdot}07919 \qquad \frac{1-V}{V} + c = 0{\cdot}20604,$$

and therefore :

$$\text{Log}\,V\,(1-c) = 9{\cdot}91819,$$

so that equation (23) becomes, after multiplying by cosec 1″, and introducing the term depending on the declination,*

$$p - \pi = [5{\cdot}23154]\,a''\tan^2\zeta_0 \sin(\pi - q)\cos(\pi - q) + [5{\cdot}23262]\,k_1 \tan\zeta_0 \sin q \tan\delta_0. \quad (25)$$

Equation (25) may now be used with the meteorological factor from Table II., and the quantities $[5{\cdot}23154]\,a''$ and $[5{\cdot}23262]\,k_1$ can be taken from Table I., with the argument log $\tan^2\zeta_0$.

* *See* Chauvenet, Spherical and Practical Astronomy, vol. II., p. 457.

Digitized by Google

It is to be remarked that the meteorological factors for the two terms of equation (25) are not strictly equal. They differ by the quantity :

$$\frac{1}{V}\,\frac{\beta\gamma \log \gamma}{\mu}\,(\lambda'-\lambda''),$$

which I have neglected, since it cannot influence the refractions appreciably, unless, of course, the declination be very great. Furthermore, equation (25) requires the use of the true position angle π in computing the refraction. We can, however, employ the observed position angle p without producing an error greater than :

$$[5{\cdot}23154]\ a''\ (\pi-p)\ \tan^2 \zeta_o \cos 2\,(\pi-q) \sin 1'',$$

which will not, in practice, exceed $1''$ at 80° zenith distance.

Digitized by Google

Digitized by Google

TABLES

FOR THE

CORRECTION OF HELIOMETER MEASURES FOR REFRACTION.

The following will serve as an example of the use of the tables, the formulæ and notation being given on the same page with Table I.

Quantities given:

Barometer = 30·62 Thermometer = 77° Fahrenheit

$\delta_0 = -20°\ 0'\ 0''$ $t_0 = 5^h\ 5^m$

$\pi = 164°\ 33'\ 36''$ $\sigma = 7200''$

$\phi = -33°\ 56'\ 3''$ or the latitude of the Cape Observatory.

From which we compute, or take from the manuscript tables of the Cape Observatory,

$\log \tan^2 \zeta_0 = 0{\cdot}7828$ $q = 119°\ 33'\ 36''$

So that $\pi - q = 45°\ 0'\ 0''$.

The computation may now be arranged as follows:

For Distance.			For Meteorological Factor.		For Position Angle.		
Log σ	3·8573						
Log v K (Tab. I.)	6·3606		Tab. II.	0·1770	Log [5·23] a'' (Tab. I.)	1·6659	
			II. A	− 0·0015	Log $\tan^2 \zeta_0$	0·7828	
Log $\sigma\ v$ K	0·2179	No. 1·651	II. B	0·0000	Log sin $(\pi - q)$	9·8495	
			II. C	0·0000	Log cos $(\pi - q)$	9·8495	
Log $v\ k_1$ (Tab. I.)	6·3521						
Log $\tan^2 \zeta_0$	0·7828		f	0·1755	Log 1st term	2·1477	
Log $\cos^2 (\pi - q)$	9·6990				1st term		140·5
Log v M	6·8339				Log [5·23] k_1 (Tab. I.)	1·6747	
Log σ	3·8573				Log tan ζ_0	0·3914	
					Log sin q	9·9394	
Log $\sigma\ v$ M	0·6912	No. 4·912			Log tan δ_0	9·5611n	
"Mean Refraction"		6·563			Log 2nd term	1·5666n	
A σ (Tab. I A)		− 0·000			2nd term		− 36·8
B σ^2 (Tab. I. B)		+ 0·015					
Met. Corr. (6·56 × 0·1755)		+ 1·152			Refraction		103·7
					Met. Corr. (103·7 × 0·1755)		18·2
Refraction $(\sigma - s)$		+ 7·730			Corrected Refraction		121·9

Digitized by Google

TABLE I.

For Distances.			For Position Angles.		
Log $\tan^2 \zeta_0$	Log v K	Log $v\ k_1$	Log $\tan^2 \zeta_0$	Log [5·23]α''	Log [5·23] k_1
8·5	6·3643	6·3630	8·5	1·6761	1·6784
9·5	6·3641	6·3623	9·5	1·6755	1·6782
9·7	6·3640	6·3620	9·7	1·6752	1·6781
9·8	6·3638	6·3617	9·8	1·6750	1·6780
9·9	6·3637	6·3614	9·9	1·6747	1·6779
0·0	6·3636	6·3611	0·0	1·6744	1·6778
0·1	6·3635	6·3606	0·1	1·6739	1·6776
0·2	6·3633	6·3600	0·2	1·6734	1·6774
0·3	6·3630	6·3592	0·3	1·6727	1·6771
0·4	6·3626	6·3583	0·4	1·6718	1·6768
0·5	6·3623	6·3573	0·5	1·6707	1·6764
0·55	6·3621	6·3566	0·55	1·6701	1·6762
0·60	6·3619	6·3558	0·60	1·6694	1·6759
0·65	6·3616	6·3550	0·65	1·6686	1·6756
0·70	6·3613	6·3540	0·70	1·6676	1·6753
0·75	6·3609	6·3529	0·75	1·6666	1·6749
0·80	6·3604	6·3516	0·80	1·6654	1·6745
0·85	6·3599	6·3501	0·85	1·6641	1·6740
0·90	6·3595	6·3489	0·90	1·6626	1·6735
0·92	6·3592	6·3479	0·92	1·6620	1·6732
0·94	6·3589	6·3471	0·94	1·6613	1·6730
0·96	6·3587	6·3464	0·96	1·6606	1·6728
0·98	6·3584	6·3456	0·98	1·6599	1·6725
1·00	6·3581	6·3447	1·00	1·6591	1·6723
1·02	6·3579	6·3439	1·02	1·6583	1·6720
1·04	6·3576	6·3431	1·04	1·6575	1·6717
1·06	6·3573	6·3423	1·06	1·6567	1·6714
1·08	6·3570	6·3413	1·08	1·6558	1·6711
1·10	6·3567	6·3403	1·10	1·6549	1·6708
1·12	6·3563	6·3393	1·12	1·6540	1·6704
1·14	6·3560	6·3383	1·14	1·6531	1·6701
1·16	6·3556	6·3372	1·16	1·6522	1·6697
1·18	6·3552	6·3362	1·18	1·6512	1·6693
1·20	6·3547	6·3350	1·20	1·6501	1·6689
1·22	6·3543	6·3337	1·22	1·6488	1·6685
1·24	6·3538	6·3323	1·24	1·6476	1·6681
1·26	6·3535	6·3310	1·26	1·6464	1·6676
1·28	6·3530	6·3295	1·28	1·6451	1·6671
1·30	6·3525	6·3280	1·30	1·6436	1·6665
1·32	6·3519	6·3265	1·32	1·6422	1·6660
1·34	6·3514	6·3250	1·34	1·6408	1·6655
1·36	6·3508	6·3233	1·36	1·6392	1·6649
1·38	6·3502	6·3214	1·38	1·6375	1·6644
1·40	6·3497	6·3196	1·40	1·6358	1·6637
1·42	6·3491	6·3178	1·42	1·6340	1·6631
1·44	6·3484	6·3158	1·44	1·6320	1·6624
1·46	6·3477	6·3137	1·46	1·6301	1·6617
1·48	6·3471	6·3117	1·48	1·6282	1·6610
1·50	6·3463	6·3096	1·50	1·6262	1·6602

Notation :

s, p = Apparent Distance and Position Angle.

σ, π, q = True Distance, Position Angle, and Parallactic Angle.

ζ_0 = Mean of the true Zenith Distances.

= "Meteorological Factor."

Formulæ :

f = Meteorological Factor from Tab. II. + Corr. (Tab. II. A) + Corr. (Tab. II. B) + Corr. (Tab. II. C).

$M = v\ k_1 \tan^2 \zeta_0 \cos^2 (\pi - q)$ (Tab. I.).

(1) $\sigma - s = + [\sigma\ v\ K$ (Tab. I.) $+ \sigma\ v\ M] (1 + f) - A\ \sigma$ (Tab. I. A) $+ B\ \sigma^3$ (Tab. I. B).

(2) $\pi - p = - \{ [5{\cdot}23 \ldots]\ \alpha'' \tan^2 \zeta_0 \sin (\pi - q) \cos (\pi - q) + [5{\cdot}23 \ldots]\ k_1 \tan \zeta_0 \sin q \tan \delta_0 \} (1 + f)$ (Tab. I., II., etc.).

If in (1) we use s instead of σ in the second member, we must add the correction

$$\frac{[\text{Refraction}]^2}{\text{Distance}}$$

which may be taken from Table III. and always increases the refraction numerically.

Digitized by Google

TABLE I. A, giving values of A × 10^3 (always positive).

$\pi - q$		Log v M.															$\pi - q$	
		6·5	6·6	6·7	6·8	6·9	7·0	7·1	7·2	7·3	7·4	7·5	7·6	7·7	7·8	7·9	8·0	
180°	0°	·000	·000	·000	·000	·000	·000	·000	·000	·000	·000	·000	·000	·000	·000	·000	·000	180° 360°
170	10	·000	·000	·000	·000	·000	·000	·000	·000	·000	·000	·000	·000	·001	·001	·001	·002	190 350
165	15	·000	·000	·000	·000	·000	·000	·000	·000	·000	·000	·001	·001	·001	·002	·003	·005	195 345
160	20	·000	·000	·000	·000	·000	·000	·000	·000	·000	·001	·001	·001	·002	·004	·006	·010	200 340
155	25	·000	·000	·000	·000	·000	·000	·000	·000	·001	·001	·001	·003	·004	·006	·010		205 335
150	30	·000	·000	·000	·000	·000	·000	·000	·001	·001	·002	·002	·004	·006	·010	·015		210 330
145	35	·000	·000	·000	·000	·000	·000	·001	·001	·001	·002	·004	·006	·009				215 325
140	40	·000	·000	·000	·000	·000	·001	·001	·001	·002	·003	·005	·008	·013				220 320
135	45	·000	·000	·000	·000	·000	·001	·001	·002	·003	·004	·007	·010					225 315
130	50	·000	·000	·000	·000	·001	·001	·001	·003	·004	·006	·010						230 310
125	55	·000	·000	·000	·001	·001	·001	·002	·004	·006	·009							235 305
120	60	·000	·000	·001	·001	·001	·002	·002	·005	·009								240 300
115	65	·000	·000	·001	·001	·002	·003	·003										245 295
110	70	·001	·001	·001	·002	·003	·005											250 290
105	75	·001	·001	·001														255 285

The quantity given by this Table is to be multiplied by the number of thousands in the distance (σ) expressed in seconds of arc.

TABLE I. B, giving values of B × 10^9 (always positive).

$\pi - q$		Log $\tan^2 \zeta_0$								$\pi - q$	
		0·5	0·9	1·0	1·1	1·2	1·3	1·4	1·5		
180°	0°	·00002	·00013	·00019	·00029	·00039	·00060	·00088	·00121	180°	360°
170	10	·00003	·00012	·00019	·00028	·00037	·00056	·00082	·00115	190	350
160	20	·00003	·00010	·00017	·00024	·00030	·00047	·00069	·00096	200	340
150	30	·00001	·00008	·00012	·00017	·00023	·00034	·00049	·00068	210	330
140	40	·00001	·00005	·00007	·00011	·00014	·00021	·00031	·00042	220	320
130	50	·00001	·00003	·00004	·00005	·00007	·00011	·00016	·00021	230	310
120	60	·00000	·00001	·00002	·00003	·00003	·00004	·00006	·00008	240	300
110	70	·00000	·00000	·00001	·00001	·00001	·00001	·00002	·00002	250	290
100	80	·00000	·00000	·00000	·00000	·00000	·00000	·00000	·00000	260	280
90	90	·00000	·00000	·00000	·00000	·00000	·00000	·00000	·00000	270	270

The quantity given by this Table is to be multiplied by the cube of the number of thousands in the distance (σ) expressed in seconds of arc.

Digitized by Google

TABLE II.—GIVING THE METEOROLOGICAL FACTOR.

Temp.	Bar. 28·5	Bar. 29·0	Bar. 29·5	Bar. 30·0	Bar. 30·5	Diff.
0°	·2888	·3113	·3338	·3563	·3788	225
1	·2859	·3083	·3308	·3533	·3757	225
2	·2830	·3053	·3278	·3502	·3726	224
3	·2801	·3024	·3248	·3472	·3695	224
4	·2771	·2994	·3217	·3440	·3663	223
5	·2743	·2965	·3188	·3410	·3633	222
6	·2715	·2937	·3159	·3381	·3603	222
7	·2686	·2908	·3129	·3351	·3572	221
8	·2658	·2879	·3100	·3321	·3542	221
9	·2629	·2850	·3070	·3291	·3511	220
10	·2601	·2821	·3041	·3261	·3481	220
11	·2573	·2792	·3012	·3232	·3451	219
12	·2546	·2764	·2984	·3203	·3422	219
13	·2517	·2736	·2955	·3173	·3392	219
14	·2490	·2708	·2927	·3144	·3363	218
15	·2463	·2681	·2899	·3116	·3334	218
16	·2435	·2652	·2870	·3087	·3304	217
17	·2408	·2625	·2842	·3058	·3275	217
18	·2381	·2597	·2813	·3029	·3245	216
19	·2354	·2570	·2785	·3001	·3217	216
20	·2327	·2542	·2757	·2972	·3188	215
21	·2300	·2515	·2730	·2945	·3160	215
22	·2273	·2488	·2702	·2916	·3131	214
23	·2247	·2461	·2675	·2888	·3102	214
24	·2221	·2434	·2647	·2861	·3074	213
25	·2194	·2407	·2620	·2833	·3045	213
26	·2168	·2381	·2593	·2806	·3018	212
27	·2142	·2354	·2566	·2778	·2990	212
28	·2116	·2327	·2539	·2750	·2962	211
29	·2090	·2301	·2512	·2723	·2934	211
30	·2064	·2275	·2485	·2696	·2907	211
31	·2038	·2248	·2458	·2668	·2879	210
32	·2012	·2222	·2432	·2642	·2851	210
33	·1987	·2196	·2406	·2615	·2824	209
34	·1961	·2170	·2379	·2588	·2797	209
35	·1936	·2145	·2353	·2562	·2770	209
36	·1911	·2119	·2327	·2535	·2743	208
37	·1886	·2093	·2301	·2508	·2716	208
38	·1860	·2067	·2275	·2482	·2689	207
39	·1836	·2042	·2249	·2456	·2663	207
40	·1811	·2017	·2223	·2430	·2636	206
41	·1786	·1992	·2198	·2404	·2610	206
42	·1762	·1967	·2173	·2378	·2584	206
43	·1737	·1942	·2147	·2352	·2557	205
44	·1713	·1918	·2122	·2327	·2531	204

	225	224	223	222
·01	4·5	4·5	4·5	4·4
·02	9·0	9·0	9·0	8·9
·03	13·5	13·4	13·4	13·3
·04	18·0	17·9	17·8	17·8
·05	22·5	22·4	22·3	22·2
·06	27·0	26·9	26·8	26·6
·07	31·5	31·4	31·2	31·1
·08	36·0	35·8	35·7	35·5
·09	40·5	40·3	40·1	40·0
·10	45·0	44·8	44·6	44·4
·20	90·0	89·6	89·2	88·8
·30	135·0	134·4	133·8	133·2
·40	180·0	179·2	178·4	177·6

	221	220	219	218
·01	4·4	4·4	4·4	4·4
·02	8·8	8·8	8·8	8·7
·03	13·3	13·2	13·1	13·1
·04	17·7	17·6	17·5	17·4
·05	22·1	22·0	21·9	21·8
·06	26·5	26·4	26·3	26·2
·07	30·9	30·8	30·7	30·5
·08	35·4	35·2	35·0	34·9
·09	39·8	39·6	39·4	39·2
·10	44·2	44·0	43·8	43·6
·20	88·4	88·0	87·6	87·2
·30	132·6	132·0	131·4	130·8
·40	176·8	176·0	175·2	174·4

	217	216	215	214
·01	4·3	4·3	4·3	4·3
·02	8·7	8·6	8·6	8·6
·03	13·0	13·0	12·9	12·8
·04	17·4	17·3	17·2	17·1
·05	21·7	21·6	21·5	21·4
·06	26·0	25·9	25·8	25·7
·07	30·4	30·2	30·1	30·0
·08	34·7	34·6	34·4	34·2
·09	39·1	38·9	38·7	38·5
·10	43·4	43·2	43·0	42·8
·20	86·8	86·4	86·0	85·6
·30	130·2	129·6	129·0	128·4
·40	173·6	172·8	172·0	171·2

	213	212	211	210
·01	4·3	4·2	4·2	4·2
·02	8·5	8·5	8·4	8·4
·03	12·8	12·7	12·7	12·6
·04	17·0	17·0	16·9	16·8
·05	21·3	21·2	21·1	21·0
·06	25·6	25·4	25·3	25·2
·07	29·8	29·7	29·5	29·4
·08	34·1	33·9	33·8	33·6
·09	38·3	38·2	38·0	37·8
·10	42·6	42·4	42·2	42·0
·20	85·8	84·8	84·4	84·0
·30	127·8	127·2	126·6	126·0
·40	170·4	169·6	168·8	168·0

	209	208	207	206	205
·01	4·2	4·2	4·1	4·1	4·1
·02	8·4	8·3	8·3	8·2	8·2
·03	12·5	12·5	12·4	12·4	12·3
·04	16·7	16·6	16·6	16·5	16·4
·05	20·9	20·8	20·7	20·6	20·5
·06	25·1	25·0	24·8	24·7	24·6
·07	29·3	29·1	29·0	28·8	28·7
·08	33·4	33·3	33·1	33·0	32·8
·09	37·6	37·4	37·3	37·1	36·9
·10	41·8	41·6	41·4	41·2	41·0
·20	83·6	83·2	82·8	82·4	82·0
·30	125·4	124·8	124·2	123·6	123·0
·40	167·2	166·4	165·6	164·8	164·0

	31
·1	3·1
·2	6·2
·3	9·3
·4	12·4
·5	15·5
·6	18·6
·7	21·7
·8	24·8
·9	27·9

	30
·1	3·0
·2	6·0
·3	9·0
·4	12·0
·5	15·0
·6	18·0
·7	21·0
·8	24·0
·9	27·0

	29
·1	2·9
·2	5·8
·3	8·7
·4	11·6
·5	14·5
·6	17·4
·7	20·3
·8	23·2
·9	26·1

	28
·1	2·8
·2	5·6
·3	8·4
·4	11·2
·5	14·0
·6	16·8
·7	19·6
·8	22·4
·9	25·2

	27
·1	2·7
·2	5·4
·3	8·1
·4	10·8
·5	13·5
·6	16·2
·7	18·9
·8	21·6
·9	24·3

	26
·1	2·6
·2	5·2
·3	7·8
·4	10·4
·5	13·0
·6	15·6
·7	18·2
·8	20·8
·9	23·4

Digitized by Google

TABLE II.—GIVING THE METEOROLOGICAL FACTOR.

Temp.	Bar. 28·5	Bar. 29·0	Bar. 29·5	Bar. 30·0	Bar. 30·5	Diff.
45°	·1689 24	·1893 25	·2097 25	·2301 26	·2505 26	204
46	·1665 24	·1868 25	·2072 25	·2276 25	·2479 26	204
47	·1640 25	·1843 25	·2047 25	·2250 26	·2453 26	203
48	·1616 24	·1819 24	·2022 25	·2225 25	·2428 25	203
49	·1592 24	·1795 24	·1997 25	·2199 26	·2402 26	202
50	·1569 23	·1771 24	·1973 24	·2175 24	·2377 25	202
51	·1545 24	·1747 24	·1948 25	·2150 25	·2351 26	202
52	·1521 24	·1722 25	·1924 24	·2125 25	·2326 25	201
53	·1498 23	·1699 23	·1899 25	·2100 25	·2301 25	201
54	·1474 24	·1674 25	·1875 24	·2075 25	·2275 26	200
55	·1451 23	·1651 23	·1851 24	·2051 24	·2251 24	200
56	·1428 23	·1627 24	·1826 25	·2026 25	·2225 26	199
57	·1405 23	·1603 24	·1803 23	·2002 24	·2201 24	199
58	·1381 24	·1580 23	·1779 24	·1977 25	·2176 25	199
59	·1359 22	·1557 23	·1755 24	·1953 24	·2152 24	198
60	·1336 23	·1534 23	·1732 23	·1929 24	·2127 25	198
61	·1313 23	·1510 24	·1708 24	·1905 24	·2103 24	197
62	·1291 22	·1487 23	·1685 23	·1882 23	·2079 24	197
63	·1268 23	·1464 23	·1661 24	·1858 24	·2054 25	196
64	·1245 23	·1441 23	·1638 23	·1834 24	·2030 24	196
65	·1222 23	·1418 23	·1614 24	·1810 24	·2006 24	196
66	·1200 22	·1395 23	·1591 23	·1787 23	·1982 24	195
67	·1178 22	·1373 22	·1568 23	·1763 24	·1958 24	195
68	·1156 22	·1350 23	·1545 23	·1740 23	·1934 24	194
69	·1134 22	·1328 22	·1523 22	·1717 23	·1911 23	194
70	·1112 22	·1305 23	·1500 23	·1693 24	·1887 24	193
71	·1090 22	·1284 21	·1477 23	·1671 22	·1864 23	193
72	·1068 22	·1261 23	·1454 22	·1647 24	·1841 23	193
73	·1046 22	·1239 22	·1432 22	·1625 22	·1817 24	193
74	·1024 22	·1217 22	·1409 23	·1601 24	·1794 23	193
75	·1003 21	·1195 22	·1387 22	·1579 22	·1771 23	192
76	·0981 22	·1172 23	·1364 23	·1556 23	·1747 24	192
77	·0960 21	·1151 21	·1342 22	·1533 23	·1724 23	191
78	·0938 22	·1129 22	·1320 22	·1511 22	·1702 22	191
79	·0917 21	·1107 22	·1298 22	·1489 22	·1679 23	191
80	·0896 21	·1086 21	·1276 22	·1466 23	·1657 22	190
81	·0875 21	·1064 22	·1254 23	·1444 22	·1634 23	190
82	·0854 21	·1043 21	·1232 22	·1422 22	·1611 23	190
83	·0833 21	·1021 22	·1211 21	·1400 22	·1589 22	189
84	·0812 21	·1000 21	·1189 22	·1378 22	·1566 23	188
85	·0791 21	·0979 21	·1167 22	·1355 23	·1544 22	188
86	·0770 21	·0958 21	·1146 21	·1334 21	·1522 22	188

	204	203	202	201
·01	4·1	4·1	4·0	4·0
·02	8·2	8·1	8·1	8·0
·03	12·2	12·2	12·1	12·1
·04	16·3	16·2	16·2	16·1
·05	20·4	20·3	20·2	20·1
·06	24·5	24·4	24·2	24·1
·07	28·6	28·4	28·3	28·1
·08	32·6	32·5	32·3	32·2
·09	36·7	36·5	36·4	36·2
·10	40·8	40·6	40·4	40·2
·20	81·6	81·2	80·8	80·4
·30	122·4	121·8	121·2	120·6
·40	163·2	162·4	161·6	160·8

	200	199	198	197
·01	4·0	4·0	4·0	3·9
·02	8·0	8·0	7·9	7·9
·03	12·0	11·9	11·9	11·8
·04	16·0	15·9	15·8	15·8
·05	20·0	19·9	19·8	19·7
·06	24·0	23·9	23·8	23·6
·07	28·0	27·9	27·7	27·6
·08	32·0	31·8	31·7	31·5
·09	36·0	35·8	35·6	35·5
·10	40·0	39·8	39·6	39·4
·20	80·0	79·6	79·2	78·8
·30	120·0	119·4	118·8	118·2
·40	160·0	159·2	158·4	157·6

	196	195	194	193
·01	3·9	3·9	3·9	3·9
·02	7·8	7·8	7·8	7·7
·03	11·8	11·7	11·6	11·6
·04	15·7	15·6	15·5	15·4
·05	19·6	19·5	19·4	19·3
·06	23·5	23·4	23·3	23·2
·07	27·4	27·3	27·2	27·0
·03	31·4	31·2	31·0	30·9
·09	35·3	35·1	34·9	34·7
·10	39·2	39·0	38·8	38·6
·20	78·4	78·0	77·6	77·2
·30	117·6	117·0	116·4	115·8
·40	156·8	156·0	155·2	154·4

	192	191	190	189	188
·01	3·8	3·8	3·8	3·8	3·8
·02	7·7	7·6	7·6	7·6	7·5
·03	11·5	11·5	11·4	11·3	11·3
·04	15·4	15·3	15·2	15·1	15·0
·05	19·2	19·1	19·0	18·9	18·8
·06	23·0	22·9	22·8	22·7	22·6
·07	26·9	26·7	26·6	26·5	26·3
·08	30·7	30·6	30·4	30·2	30·1
·09	34·6	34·4	34·2	34·0	33·8
·10	38·4	38·2	38·0	37·8	37·6
·20	76·8	76·4	76·0	75·6	75·2
·30	115·2	114·6	114·0	113·4	112·8
·40	153·6	152·8	152·0	151·2	150·4

	25
·1	2·5
·2	5·0
·3	7·5
·4	10·0
·5	12·5
·6	15·0
·7	17·5
·8	20·0
·9	22·5

	24
·1	2·4
·2	4·8
·3	7·2
·4	9·6
·5	12·0
·6	14·4
·7	16·8
·8	19·2
·9	21·6

	23
·1	2·3
·2	4·6
·3	6·9
·4	9·2
·5	11·5
·6	13·8
·7	16·1
·8	18·4
·9	20·7

	22
·1	2·2
·2	4·4
·3	6·6
·4	8·8
·5	11·0
·6	13·2
·7	15·4
·8	17·6
·9	19·8

	21
·1	2·1
·2	4·2
·3	6·3
·4	8·4
·5	10·5
·6	12·6
·7	14·7
·8	16·8
·9	18·9

Digitized by Google

TABLE II. A, giving the First Correction of the Meteorological Factor.

Temp.	Log $\tan^2 \zeta_o$ 0·0	0·5	0·6	0·7	0·8	0·9	1·0	1·1	1·2	1·3	1·4	1·5
0°	+·0006	+·0018	+·0022	+·0026	+·0030	+·0037	+·0048	+·0056	+·0068	+·0083	+·0101	+·0121
10°	+·0005	+·0013	+·0016	+·0020	+·0024	+·0029	+·0038	+·0044	+·0054	+·0065	+·0079	+·0095
20°	+·0004	+·0010	+·0012	+·0014	+·0017	+·0021	+·0027	+·0032	+·0039	+·0048	+·0058	+·0070
30°	+·0002	+·0006	+·0007	+·0009	+·0011	+·0014	+·0018	+·0021	+·0025	+·0031	+·0038	+·0045
40°	+·0001	+·0003	+·0003	+·0004	+·0005	+·0006	+·0008	+·0010	+·0012	+·0014	+·0017	+·0021
50°	·0000	·0000	·0000	·0000	−·0001	−·0001	−·0001	−·0001	−·0002	−·0002	−·0002	−·0003
60°	−·0001	−·0004	−·0005	−·0006	−·0007	−·0009	−·0010	−·0012	−·0015	−·0018	−·0022	−·0026
70°	−·0002	−·0007	−·0008	−·0010	−·0012	−·0015	−·0019	−·0023	−·0028	−·0034	−·0041	−·0049
80°	−·0004	−·0010	−·0012	−·0015	−·0018	−·0022	−·0028	−·0033	−·0040	−·0049	−·0060	−·0071

TABLE II. B, giving the Second Correction of the Meteorological Factor.

Met. Factor.	First Correction of Met. Factor. −·008	−·006	−·004	−·002	·000	+·002	+·004	+·006	+·008	+·010	+·012
0·0	+·0014	+·0010	+·0007	+·0003	·0000	−·0003	−·0007	−·0010	−·0014	−·0017	−·0021
0·1	+·0007	+·0005	+·0004	+·0002	·0000	−·0002	−·0004	−·0005	−·0007	−·0009	−·0011
0·2	·0000	·0000	·0000	·0000	·0000	·0000	·0000	·0000	·0000	−·0001	−·0001
0·3	−·0006	−·0005	−·0003	−·0002	·0000	+·0002	+·0003	+·0005	+·0006	+·0008	+·0009

TABLE II. C, giving the Third Correction of the Meteorological Factor.

$t - T$ = excess of attached over external Thermometer.

t—T	Corr.
−1°	+·0001
0°	·0000
+1°	−·0001
2°	−·0002
3°	−·0003

Digitized by Google

TABLE III.—Correction to be added to the Refraction, computed with Apparent instead of True Distance.

Distance.	Refraction.						
	1″ 2″ 3″	4″ 5″ 6″	7″ 8″ 9″	10″ 11″ 12″	13″ 14″ 15″	16″ 17″ 18″	19″ 20″
′	′						
200	·005·020						
400	·003·010·023						
600	·002·007·015	·027·041					
800	·001·005·011	·020·032·045	·061				
1000	·001·004·009	·016·025·036	·049·064				
1200	·001·003·008	·013·021·030	·041·053·068	·083			
1400	·001·003·006	·011·018·026	·035·046·058	·071·086			
1600	·001·002·006	·010·016·022	·031·040·051	·062·076·090	·106		
1800	·001·002·005	·009·014·020	·027·036·045	·056·067·080	·094·109·125		
2000	·001·002·004	·008·012·018	·024·032·040	·050·060·072	·084·098·112	·128	
2200	·000·002·004	·007·011·016	·022·029·037	·045·055·066	·077·089·102	·116·131·147	
2400	·000·002·004	·007·010·015	·020·027·034	·042·050·060	·070·082·094	·107·121·135	·151·167
2600	·000·002·003	·006·010·014	·019·025·031	·038·047·055	·065·075·087	·099·111·125	·139·154
2800	·000·001·003	·006·009·013	·017·023·029	·036·043·051	·060·070·080	·091·103·116	·129·143
3000	·000·001·003	·005·008·012	·016·021·027	·033·040·048	·056·065·075	·085·096·108	·120·133
3200	·000·001·003	·005·008·011	·015·020·025	·031·038·045	·053·061·070	·080·090·101	·113·125
3400	·000·001·003	·005·007·011	·014·019·024	·029·036·042	·050·058·066	·075·085·095	·105·118
3600	·000·001·003	·004·007·010	·014·018·023	·028·034·040	·047·054·063	·071·080·090	·100·111
3800	·000·001·002	·004·007·009	·013·017·021	·026·032·038	·044·052·059	·067·076·085	·095·105
4000	·000·001·002	·004·006·009	·012·016·020	·025·030·036	·042·049·056	·064·072·081	·090·100
4200	·000·001·002	·004·006·009	·012·015·019	·024·029·034	·040·047·054	·061·069·077	·086·095
4400	·000·001·002	·004·006·008	·011·015·018	·023·027·033	·038·044·051	·058·066·074	·082·091
4600	·000·001·002	·003·005·008	·011·014·018	·022·026·031	·037·043·049	·056·063·070	·078·087
4800	·000·001·002	·003·005·007	·010·013·017	·021·025·030	·035·041·047	·053·060·067	·075·083
5000	·000·001·002	·003·005·007	·010·013·016	·020·024·029	·034·039·045	·051·058·065	·072·080
5200	·000·001·002	·003·005·007	·009·012·016	·019·023·028	·032·038·043	·049·055·062	·069·077
5400	·000·001·002	·003·005·007	·009·012·015	·018·022·027	·031·036·042	·047·053·060	·067·074
5600	·000·001·002	·003·004·006	·009·011·014	·018·022·026	·030·035·040	·046·052·058	·065·072
5800	·000·001·002	·003·004·006	·008·011·014	·017·021·025	·029·034·039	·044·050·056	·062·069
6000	·000·001·002	·003·004·006	·008·011·014	·017·020·024	·028·033·038	·043·048·054	·060·067
6200	·000·001·001	·003·004·006	·008·010·013	·016·019·023	·027·032·036	·041·047·052	·058·064
6400	·000·001·001	·002·004·006	·008·010·013	·016·019·022	·026·031·035	·040·045·051	·056·062
6600	·000·001·001	·002·004·005	·007·010·012	·015·018·022	·026·030·034	·039·044·049	·055·061
6800	·000·001·001	·002·004·005	·007·009·012	·015·018·021	·025·029·033	·038·042·048	·053·059
7000	·000·001·001	·002·004·005	·007·009·012	·014·017·021	·024·028·032	·037·041·046	·052·057
7200	·000·001·001	·002·003·005	·007·009·011	·014·017·020	·023·027·031	·036·040·045	·050·056
7400	·000·001·001	·002·003·005	·007·009·011	·014·016·019	·023·026·030	·035·039·044	·049·054
7600	·000·001·001	·002·003·005	·006·008·011	·013·016·019	·022·026·030	·034·038·043	·048·053
7800	·000·001·001	·002·003·005	·006·008·010	·013·015·018	·022·025·029	·033·037·041	·046·051
8000	·000·000·001	·002·003·004	·006·008·010	·012·015·018	·021·024·028	·032·036·040	·045·050

Digitized by Google

Digitized by Google

Digitized by Google

Digitized by Google

Zentralbibliothek Zürich
ZM02...
Digitized by Google

Digitized by Google